MUNICIPAL

CODE OF THE CITY

OF

QUINCY, ILLINOIS

1980

Published by authority of the Mayor and
City Council of the City of Quincy,
Illinois in book form.

MAYOR
Charles W. Scholz

ALDERMEN

Terry Grussenmeyer	Mike Farha
Virgil Goehl	Mike Rein
Steve Duesterhaus	Charles Fitch
Eugene Mueller	Sharon Mackenzie
Paul Havermale	Raymond “Skip” Vahlkamp Jr.
Roger Schoenekase	Richard Reis
Richard J. Smith	Kenneth Sparrow Jr.

CITY CLERK
Virginia Hayden

CITY TREASURER
Peggy Crim

LEGAL DEPARTMENT
Christopher Scholz, Corporation Counsel
Anthony Cameron, City Attorney
Bruce Alford, Assistant City Attorney
Andrew Staff, Assistant Corporation Counsel

TABLE OF CONTENTS

Chapter 1 THE MAYOR ……

Chapter 2 THE CITY COUNCIL ……...
Article I General Provisions ……...……..
Article II Rules of Order …….
Article III Wards ……..

Chapter 3 THE CITY CLERK ……

Chapter 4 THE CITY TREASURER ……

Chapter 5 THE COMPTROLLER ……...……..…

Chapter 6 LEGAL DEPARTMENT ……..……

Chapter 7 DEPARTMENT OF PUBLIC WORKS …...……

Chapter 8 FIRE DEPARTMENT ……..……

Chapter 9 POLICE DEPARTMENT …….……

Chapter 10 OTHER OFFICIALS AND DEPARTMENTS …….……
Article I Director of Administrative Services …..…….……
Article II Director of Purchasing ……...……
Article III City Forester …….…..……
Article IV Department of Planning & Development ……..……
Article V Department of Human Resources ……...……

Chapter 11 BOARDS AND COMMISSIONS ……
Article I Board of Local Improvements ……
Article II Library Board …….……
Article III Police Pension Board ……..…
Article IV Firemen's Pension Board ……...……
Article V Plan Commission ……
Article VI Board of Fire & Police Commission ……..……
Article VII Zoning Board of Appeals ……...……
Article VIII Traffic Commission ……
Article IX Commission of Equal Opportunities ……..……
Article X Transit Advisory Commission ……...……
Article XI (Reserved) ……...……...……
Article XII Quincy City Tree Board …….……

Article XIII Business District Development and Redevelopment Commission ……
Article XIV Quincy Preservation Commission ……..……
Article XV Quincy and Adams County 9-1-1 Communication System Governing Board ……...……
Article XVI Quincy Economic Development Loan Committee
Article XVII Electrical Commission ……..
Article XVIII Building Commission ……
Article XIX Sister City Commission …….
Article XXV Foreign Fire Insurance Board ……

Chapter 12 HOME RULE UNIT ENABLING PROVISIONS ……

Chapter 13 ADMINISTRATIVE & OTHER PROVISIONS RELATING TO THE CITY
Article I Officers and Employees …….
Article II Personnel Code ……...
Article III House Numbering ……..
Article IV City Market & Garage ……
Article V Docks & Harbors ……
Article VI Regulations Concerning Boat Operators ……
Article VII Subdivisions ……...
Article VIII Cemetery & City Vaults …….
Article IX Other Regulations ……...
Article X Municipal Parking Lots ……..
Article XI Water & Sewer Extensions ……
Article XII Right of Entry ……
Article XIII Impasse Resolution ……
Article XIV Issuance of Anti-Pollution Bonds & Industrial Bonds
Article XV Ethics …….
Article XVI Purchasing – Bidding …….

Chapter 14 STREETS AND SIDEWALKS ……
Article I General Provisions ……..
Article II Driveways ……
Article III Excavations …….
Article IV Trees & Shrubbery …….
Article V Signs, Awnings & Similar Devices ……
Article VI Subsidewalk Space …….
Article VII Snow Removal ……
Article VIII Street Cleaning ……

Chapter 15 LICENSES AND PERMITS…..……

Chapter 16 AMUSEMENTS……...…….
Article I General Provisions ……...……..…….

Article II Billiard & Pool Halls …….…….
Article III Bowling Alleys ……..…….
Article IV Circuses …….…….…….
Article V Motion Pictures & Theatricals ..…….
Article VI Public Dances or Live Entertainment.…….
Article VII Shooting Galleries …….…….
Article VIII Skating Rinks …….…….
Article IX Coin Operated Mechanical Amusement & Music Devices ……...…….

Chapter 17 FINANCE …….……..……
Article I Generally …….
Article II Hotel Operators Tax ……
Article III Home Rule Municipal Retailers' Occupation Tax ….
Article IV Home Rule City of Quincy Service Occupation Tax...
Article V City of Quincy Use Tax……...
Article VI Locally Imposed And Administered Tax Rights And Responsibilities……

Chapter 18 ALCOHOLIC LIQUOR DEALERS…….

Chapter 19 BUSINESS LICENSES …….
Article I Auctions & Auctioneers ……..
Article II Auto Courts …….
Article III Private Security & Fire Alarms Systems…….
Article IV Electrical Contractors and Electricians ……...……
Article V Foreign Fire Insurance Companies …….
Article VI Peddlers ……...
Article VII Second Hand Store ……..
Article VIII Solicitors …….
Article IX Taxicabs ……..
Article X Mobil Home Parks ……..
Article XI Handbills …….
Article XII Junk Shops or Junkyards …….
Article XIII Trapshooting ……
Article XIV Reserved……... ……...
Article XV Unrelated Adult Housing ……...…….

Chapter 20 TRAFFIC …….…….…….
Article I Definitions & General Provisions ……..….
Article II Pedestrians ……...
Article III Rules for Driving …….
Article IV Conditions of Vehicles ……...
Article V Parking Rules ……..
Article VI Uptown Parking ……..

Article VII Bicycles …….…….
Article VIII Drivers ……
Article IX Ambulances ……
Article X Abandoned & Derelict Vehicles …….
Article XI Penalty ……...…….…….

Chapter 21 HEALTH REGULATIONS …….……...…….…….
Article I Nuisances & Abatement of Nuisances ……
Article II Fire Prevention ……
Article III Garbage & Recycling ……..
Article IV Other Regulations ……..
Article V Open Burning …….

Chapter 22 ANIMALS …….…….
Article I General Provisions……..
Article II Dogs……
Article III Cats……..
Article IV Miscellaneous Animals……
Article V Impounding Animals Running At Large…….
Article VI Penalty…….

Chapter 23 BUILDINGS, CONSTRUCTION & DEVELOPMENT REGULATIONS
Article I Construction Regulations……
Article II Moving Buildings ……..
Article III Demolition of Building or Structures and Requirement of a Fire Protection Guard……..
Article IV Building Operations ……
Article V Housing Standards …….…
Article VI Development in Special Flood Hazard Areas …….
Article VII Smoke Detectors …….
Article VIII One and Two Family Dwellings …….

Chapter 24 PLUMBING AND SEWERS …….……
Article I Plumbing and Sewers ……..
Article II Septic Tanks ……
Article III Swimming Pools …….
Article IV Definitions ……...
Article V Use of Public Sewers Required ……...……
Article VI Private Sewage Disposal …….
Article VII Building Sewers and Connections ……...……
Article VIII General Sewer Requirements ……..
Article IX Pretreatment of Wastewater ……...…….
Article X Wastewater Discharge Permit Application …….
Article XI Wastewater Discharge Permit Issuance Process …..…
Article XII Reporting Requirements …….

Article XIII Compliance Monitoring ……..
Article XIV Administrative Enforcement Remedies ……..
Article XV Judicial Enforcement Remedies ……..
Article XVI Supplement Enforcement Action ……
Article XVII Affirmative Defenses to Discharge Violations ……...
Article XVIII Wastewater Service Charges ……...
Article XIX General Provisions ……..……...…….

Chapter 25 WATER……..
Article I General Provisions ……..
Article II Services ……..
Article III Rates ……..…….…….
Article IV Plumbers ……..
Article V Cross Connection Control ……..…….

Chapter 26 ELECTRICITY …….…….

Chapter 27 FLAMMABLE LIQUIDS …….……...….

Chapter 28 LIQUIFIED PETROLEUM GASES ……

Chapter 29 ZONING …….…….…….
Article I The City and All Contiguous Unincorporated Territory Within One and One-Half Miles of the Quincy Corporate Limits is Divided into Districts
Article II Use of Premises in the City and All Contiguous Unincorporated Territory Within One and One-Half Miles of the Quincy Corporate Limits is Regulated
Article III Maximum Height Limits are Established……
Article IV Minimum Yards are Established …….
Article V Minimum Lot Areas & Widths are Established ……..
Article VI Off-Street Parking Spaces and Loading ……..
Article VII Accessory Uses & Buildings Regulated ……..
Article VIII Non-Conforming Uses ……
Article IX Planned Development ……
Article X Landmarks & Historic Districts …….…….
Article XI Permits …….
Article XII Amendments & Changes …….
Article XIII Violation & Penalty …….
Article XIV Signs ……
Article XV Site Plan Review …….

Chapter 30 MISCELLANEOUS REGULATIONS ……
Article I Explosives & Fireworks …….
Article II Tobacco Regulations – Minors ……...

Article III Tag Days …….
Article IV Curfew …….
Article V Public Buildings …….
Article VI Public Gatherings ……..…….
Article VII Sound Amplifiers ……..…….
Article VIII Zone of Quiet …….
Article IX Receipts for Money ……...…….
Article X Fair Housing ……..…….

Chapter 31 PUBLIC PEACE, MORALS AND WELFARE ……
Article I Miscellaneous Offenses ……..
Article II Vandalism ……

Chapter 32 PENALTIES …….…….

Chapter 33 MUNICIPAL CODE
Article I Title – Interpretation……
Article II Amendments ……
Article III Printing ……
Article IV Repealing Clause ……

Chapter 34 GAMES OF CHANCE – RAFFLES …….

AN ORDINANCE ADOPTING THE MUNICPAL CODE OF QUINCY OF 1980.

WHEREAS, the City of Quincy, Adams County, Illinois is a home rule unit of local government pursuant to the provisions of Section 6, Article VII (Local Government) of the Constitution of the State of Illinois; and,

WHEREAS, pursuant to such authority, this ordinance to be referred to as the “Municipal Code of Quincy”, of “Municipal Code of Quincy of 1980”, or “Quincy Municipal Code”, or words of similar effect demonstrating reference hereto, is being adopted.

NOW, THEREFORE, BE IT ORDAINED BY THE CITY OF COUNCIL OF THE CITY OF QUINCY, ADAMS COUNTY, ILLINOIS as follows:

TITLE I

ADMINISTRATION AND PERSONNEL

CHAPTER 1

THE MAYOR

Section 1.001 **Election** --- The Mayor shall be elected for a four year term, and shall serve until his successor is elected and qualified as is provided by statute. The term of office for an elected Mayor shall commence on the first regular meeting in the month following such person's election.

1.002 **Duties and powers** ---

(1) **Generally**: The Mayor shall be the chief Executive Officer of the city and shall perform such duties as may be required of him by statute or ordinance. He shall have supervision over all of the executive officers and employees of the city and shall have the power and authority to inspect all books and records pertaining to city affairs.

The Mayor shall also sign all bonds, warrants, vouchers, leases and conveyances authorized by the Council; and he shall also sign on behalf of the city all contracts, licenses and permits so authorized unless the council shall authorize some other official to sign such documents on the city's behalf. He shall have the power of pardon from the City Jail.

(2) **Emergency powers**: The Mayor shall have the extraordinary power and authority to exercise, by executive order, during a state of emergency, such of the powers of the corporate authorities as may be reasonably necessary to respond to the emergency. The Mayor shall not exercise such extraordinary power and authority except in the case of a "disaster" as herein defined, after signing, under oath, a statement finding that such a disaster or emergency exits, setting forth facts to substantiate such findings, describing the nature of the disaster or emergency, and declaring that a state of emergency exists. Such statement shall be filed with the Clerk of the municipality as soon as practicable. A state of emergency, declared as provided in this section, shall expire not later than the adjournment of the first regular meeting of the corporate authorities after the state of emergency is declared.

(a) "Disaster" or "emergency" as used herein means an occurrence of threat of widespread or severe damage, injury or loss of life or property resulting from any natural or technological cause, including but not limited to fire, flood, earthquake, wind, storm, hazardous materials spill or other water contamination requiring emergency action to avert danger or damage, epidemic, air contamination, blight, extended periods of severe and inclement weather, drought, infestation, critical shortages of essential fuels and energy, explosion, riot, or hostile military or paramilitary action.

1.003 **Appointment of officers** --- The Mayor shall appoint, by and with the advice and consent of the City Council, all officers of the city whose election or appointment is not otherwise provided for. Any vacancies occurring in an appointive office shall be filled in the same manner.

1.004 **Designation of officer's duties** --- Whenever there is a dispute as to the respective duties or power of any appointed officer of the city this dispute shall be settled by the Mayor after consultation with the Corporation Counsel; and the Mayor shall have the power to delegate to any appointed officer any duty which is to be performed when no specific officer has been directed to perform that duty.

1.005 Committees --- The Mayor shall be ex-officio member of each committee of the city.

1.006 Mayor pro-tem --- During a temporary absence or disability of the Mayor, the City Council shall elect one of its number to act as Mayor pro-tem, who during such absence or disability, shall possess the powers of Mayor as is provided by statute.

1.007 Formal occasions --- The Mayor shall act for and on behalf of the city on formal occasions and receptions; but in his absence or inability to attend any such function he may select any other city officer to so act.

1.008 Bond --- Before entering upon the duties of his office, the Mayor shall execute a bond in such amount and with such sureties as may be required by the Council conditioned upon the faithful performance of the duties of his office, as required by statute.

CHAPTER 2

THE CITY COUNCIL

ARTICLE I **General Provisions**

ARTICLE II **Rules Of Order**

ARTICLE III **Wards**

ARTICLE I GENERAL PROVISIONS

Section 2.101 Election - function --- The members of the Council shall be elected and serve for a four year term as is provided by statute. The Council shall be the legislative division of the city government and shall perform such duties and have such powers as may be authorized by statute. The term of office for an elected member of the City Council shall commence on the first regular meeting in the month following such person's election.

2.102 Meetings --- The regular meeting of the Council shall be held in the council room each Monday in every month at the hour of seven thirty p.m., provided that if the regular meeting falls on a legal holiday, the meeting shall take place on the next day at the same hour and place. Adjourned meetings may be held at such other time as the Council may determine.

2.103 Special meetings --- Special meetings of the Council may be called by the Mayor or three Aldermen; provided that a written notice of such meeting shall be given to each member of the Council at least twenty-four hours before the time set for the meeting. If all the elected members of the Council are present at any special meeting then, the requirements of notice shall be unnecessary and shall be deemed waived.

2.104 Mayor as presiding officer - deciding vote --- The Mayor shall preside at all meetings of the City Council. He shall not vote on any ordinance, resolution or motion except: (1) where the vote of the Aldermen has resulted in a tie; or (2) where one-half of the Aldermen elected have voted in favor of an ordinance, resolution or motion, even though there is no tie vote or (3) where a vote greater than a majority of the corporate authorities is required by this Code to adopt an ordinance, resolution or motion. In each instance specified, the Mayor shall vote. Nothing in this section shall deprive an acting Mayor or Mayor pro-tem from voting in his capacity as Alderman, but he shall not be entitled to another vote in his capacity as acting Mayor or Mayor pro-tem.

2.105 Ordinance - approval - veto --- All resolutions and motions (1) which create any liability against the city, or (2) which provide for the expenditure or appropriation of its money, or (3) to sell any city property, and ordinances passed by the City Council shall be deposited with the City Clerk. If the Mayor approves of them, he shall sign them. Those of which he disapproves he shall return to the City Council, with his written objections, at the next regular meeting of the City Council occurring not less than five days after their passage. The Mayor may disapprove of any one or more sums appropriated in any ordinance, resolution or motion making an appropriation, and if so, the remainder shall be effective. However, the Mayor may disapprove entirely of an ordinance, resolution or motion making an appropriation. If the Mayor fails to return any ordinance or any specified resolution or motion with his written objections within the designated time, it shall become effective despite the absence of his signature.

2.106 Reconsideration - passing over veto --- Every resolution and motion specified in the preceding section, and every ordinance, which is returned to the City Council by the Mayor, shall be reconsidered by the City Council. If, after such reconsideration, two-thirds of all the Aldermen, then holding office on the City Council, shall agree to pass an ordinance, resolution or motion, notwithstanding the Mayor's refusal to approve it, then it shall be effective. The vote on

the question of passage over the Mayor's veto shall be by yeas and nays, and shall be recorded in the journal.

2.107 <u>Quorum</u> --- A majority of the elected members of the Council, or the Mayor and half the number of Aldermen shall constitute a quorum, thereof, but no ordinance, resolution or motion, shall be passed except upon the favorable vote of a majority of the elected members as provided by statute.

2.108 <u>Non-attendance</u> --- If any member of the City Council shall absent himself from any meeting of the same, or depart therefrom before adjournment of any meeting of the Council, unless excused by the Council, he shall be subject to a deduction of his pay for such meeting.

2.109 <u>Committees</u> --- The Standing Committees of the Council shall be appointed by the Mayor at the first regular meeting of the council in May of each year, or as soon thereafter as may be practicable, and shall be as follows:

Aeronautics (3 members)
Animal Shelter (1 member)
City Hall (3 members)
Community Development (2 members – one from each political party)
Engineering & Inspection (3 members)
Finance (3 members)
Fire (3 members)
GREDF (2 members - one from each political party)
Historic Preservation (2 members)
Insurance (3 members)
Landfill (3 members)
Library (1 member)
Loan Committee (2 members - one from each political party)
Plan Commission (1 member)
Police (3 members)
Safety (1 member)
Sanitation (3 members)
Street & Bridge (3 members)
Town Board (3 members)
Traffic Commission (1 member)
Transit Advisory (3 members)
Utilities (3 members)
Water (3 members)

2.110 <u>Report of committee - action deferred</u> --- Any report of a committee of the City Council shall be deferred for final action thereon to the next regular meeting of the City Council after the report is made upon the request of any five Aldermen present.

2.111 <u>Attaching papers to report</u> --- Every committee of the City Council, in reporting on a subject referred to them, shall attached to their report all papers or documents in the possession of the committee relative to the matters so referred.

2.112 <u>Records</u> --- The City Clerk shall keep the minutes and records of the proceedings.

2.113 <u>Disturbing meetings</u> --- It shall be unlawful to disturb any regular or special meeting of the City Council, or of any committee thereof, or of any board or commission appointed pursuant to the provisions of this Code, or to behave in a disorderly manner at such meetings. Smoking shall be prohibited at all times in the City Council Chamber. Any person violating the provisions of this section shall be fined as provided in Chapter 32.

ARTICLE II RULES OF ORDER

Section 2.201 **Order of business** --- The order of business at meetings of the City Council shall be as follows:

1. Reading of the minutes of the proceedings of the last meeting or meetings, amendment and approval of same.
2. The presentation of petitions and report of officers.
3. The reports of standing committees.
4. Reports of select committees.
5. Communications to the City Council, which may also be considered at any time.
6. Unfinished business of preceding meetings.
7. Motions, resolutions and notices.
8. Adjournment.

2.202 **Rescinded action** --- No vote or action of the City Council shall be rescinded at any special meeting unless there be present at such special meeting as many members of the Council as were present at the meeting when such vote or action was taken, as is provided by statute.

2.203 **Resolution** --- Any resolution submitted to the City Council shall be reduced to writing before being voted upon.

2.204 **Addressing meetings** --- No person other than the Mayor, a member of the City Council or a City Official, shall address that body at any regular or special meeting of the Council except upon consent of a majority of the members present. All requests to address the City Council initiated by an individual other than the Mayor or an Alderman shall be filed in writing with the City Clerk at least twenty-four hours prior to the meeting, at which such individual desires to address the City Council, stating the specific matter to be discussed in detail.

2.205 **Suspension of rules** --- The rules or order, other than those prescribed by statute, may be suspended at any time by the consent of a majority of the members present at any meeting.

2.206 **Robert's Rules of Order Revised** --- Robert's Rules of Order shall govern the deliberations of the City Council except when in conflict with any of the foregoing rules.

2.207 **Ordinances** --- Every proposed ordinance shall be presented in writing (and shall be read by its title only unless otherwise required by motion of the Council). Except upon motion approved by a majority of a quorum of the Council, such ordinance shall be read at three separate meetings before a vote is taken on its final passage. In the event the Council waives the requirement that the ordinance be presented at three separate meetings, a vote may be taken upon the ordinance without further reading of the same by the Clerk.

ARTICLE III WARDS

Section 2.301 <u>Division</u> --- The city shall be divided into seven wards with boundaries as hereinafter designated.

2.302 <u>First Ward</u> --- Commencing at the intersection of the City Limits and the centerline of North 12th Street; thence south along the centerline of North 12th Street to the centerline of Locust Street; thence west along the centerline of Locust Street to the centerline of North 10th Street; thence south along the centerline of North 10th Street to the centerline of Cedar Street; thence west along the centerline of Cedar Street to the centerline of North 8th Street; thence south along the centerline of North 8th Street to the centerline of Vermont Street; thence west along the centerline of Vermont Street extended to the City Limits; thence along the City Limits to the point of beginning.

2.303 <u>Second Ward</u> --- Commencing at the center of the intersection of North 8th Street and Oak Street; running thence north along the centerline of North 8th Street to the centerline of Cedar Street; running thence east along the centerline of Cedar Street to the centerline of North 10th Street; thence north along the centerline of North 10th Street to the centerline of Locust Street; thence east along the centerline of Locust Street to the centerline of North 12th Street; thence north along the centerline of North 12th Street to the centerline of Seminary Road; thence east along the centerline of Seminary Road to the centerline of North 18th Street; thence south along the centerline of North 18th Street to the centerline of Locust Street; thence east along the centerline of Locust Street to the centerline of North 22nd Street; thence south along the centerline of North 22nd Street to the centerline of Chestnut Street; thence east along the centerline of Chestnut Street to the centerline of North 24th Street; thence south along the centerline of North 24th Street to the centerline of Oak Street; thence west along the centerline of Oak Street to the point of beginning.

2.304 <u>Third Ward</u> --- Commencing at the intersection of the City Limits and the centerline of Maine Street, extended; thence west along the centerline of extended Maine Street to the centerline of North 24th Street; thence north along the centerline of North 24th Street to the centerline of Chestnut Street; thence west along the centerline of Chestnut Street to the centerline of North 22nd Street; thence north along the centerline of North 22nd Street to the centerline of Locust Street; thence west along the centerline of Locust Street to the centerline of North 18th Street; thence north along the centerline of North 18th Street to the centerline of Seminary Road; thence west along the centerline of Seminary Road to the centerline of North 12th Street; thence north along the centerline of North 12th Street to the City Limits; thence along the City Limits to the point of beginning.

2.305 <u>Fourth Ward</u> --- Commencing at the intersection of the City Limits and the centerline of State Street; thence west along the centerline of State Street to the centerline of South 30th Street; thence south along the centerline of South 30th Street, extended, to a point, such point being the southeast corner of Adams County Election Precinct No. 26; thence west along the south line of said Election Precinct No. 26 to the centerline of South 24th Street; thence south along the centerline of South 24th Street to the centerline of Harrison Street; thence west along the

centerline of Harrison Street to the centerline of South 20th Street; thence north along the centerline of South 20th Street to the centerline of State Street; thence west along the centerline of State Street to the centerline of South 14th Street; thence north along the centerline of 14th Street to the centerline of Oak Street; thence east along the centerline of Oak Street to the centerline of North 24th Street; thence south along the centerline of North 24th Street to the centerline of Maine Street; thence east along the centerline of Maine Street to the City Limits; thence along the City Limits to the point of beginning.

2.306 <u>Fifth Ward</u> --- Commencing at the intersection of the City Limits and the centerline of State Street; thence west along the centerline of State Street to the centerline of South 30th Street; thence south along the centerline of South 30th Street, extended, to a point, such point being the southeast corner of Adams County Election Precinct No. 26; thence west along the south line of said Election Precinct Non. 26 to the centerline of South 24th Street; thence south along the centerline of South 24th Street to the centerline of Harrison Street; thence west along the centerline of Harrison Street to the east line of Granview Acres Subdivision; thence south along the east line of Granview Acres Subdivision to the southeast corner of Granview Acres Subdivision; thence east along the south line of Wilmar Orchard Subdivision to the west line of Koontz-Lubbert Subdivision; thence south along the west line of Koontz-Lubbert Subdivision extended to the centerline of Cherry Lane; thence west along the centerline of Cherry Lane to the west line extended of Stillwater Subdivision; thence south along the west line of Stillwater Subdivision to the City Limits; thence along the City Limits to the northwest corner of Rich Haven Subdivision; thence south along the west line of Rich Haven Subdivision to the northeast corner of White Acres Subdivision; thence west along the north line of White Acres Subdivision to the northwest corner of White Acres Subdivision; thence south along the west line of White Acres Subdivision to the centerline of Melview Road; thence west along the centerline of Melview Road to the northwest corner of South Crest Estates Subdivision; thence south along the west line of South Crest Estates Subdivision to the City Limits; thence along the City Limits to the point of beginning.

2.307 <u>Sixth Ward</u> --- Commencing at a point being the intersection of the centerline of Jackson Street extended and the western City Limits; thence east along the centerline of Jackson Street to the centerline of South 11th Street; thence north along the centerline of South 11th Street to the centerline of Washington Street; thence east along the centerline of Washington Street to the centerline of South 12th Street; thence north along the centerline of South 12th Street to the centerline of State Street; thence east along the centerline of State Street to the centerline of South 20th Street; thence south along the centerline of South 20th Street to the centerline of Harrison Street; thence west along the centerline of Harrison Street to the east line of Granview Acres Subdivision; thence south along the East line of Granview Acres Subdivision to the southeast corner of Granview Acres Subdivision; thence east along the south line of Wilmar Orchard Subdivision to the west line of Koontz-Lubbert Subdivision; thence south along the west line of Koontz-Lubbert Subdivision extended to the centerline of Cherry Lane; thence west along the centerline of Cherry Lane to the west line extended of Stillwater Subdivision; thence south along the west line of Stillwater Subdivision to the City Limits; thence along the City Limits to the northwest corner of Rich Haven Subdivision; thence south along the west line of Rich Haven Subdivision to the northeast corner of White Acres Subdivision; thence west along the north line

of White Acres Subdivision to the northwest corner of White Acres Subdivision; thence south along the west line of White Acres Subdivision to the centerline of Melview Road; thence west along the centerline of Melview Road to the northwest corner of South Crest Estates Subdivision; thence south along the west line of South Crest Estates Subdivision to the City Limits; thence along the City Limits to the point of beginning.

2.308 <u>Seventh Ward</u> --- Commencing at a point being the intersection of the centerline of Jackson Street extended and the western City Limits; thence east along the centerline of Jackson Street to the centerline of South 11th Street; thence north along the centerline of South 11th Street to the centerline of Washington Street; thence east along the centerline of Washington Street to the centerline of South 12th Street; thence north along the centerline of South 12th Street to the centerline of State Street; thence east along the centerline of State Street to the centerline of South 14th Street; thence north along the centerline of 14th Street to the centerline of Oak Street; thence west along the centerline of Oak Street to the centerline of North 8th Street; thence south along the centerline of North 8th Street to the centerline of Vermont Street; thence west along the centerline of Vermont Street to the City Limits; thence along the City Limits to the point of beginning.

2.309 <u>Election Precincts</u> ---In determining ward boundaries, the City Council shall strive to maintain unity within the existing precinct boundaries.

CHAPTER 3

THE CITY CLERK

Section 3.001 **Election** --- The City Clerk shall be elected and serve for a four year term and until a successor is elected and qualified as provided by statute. The term of office for an elected City Clerk shall commence on the first regular meeting in the month following such person's election.

3.002 **Bond** --- Before entering upon the duties of the office, the City Clerk shall execute a bond in such amount and with such sureties as may be required by the Council, conditioned upon the faithful performance the duties of the office as required by law.

3.003 **Signatures** --- The City Clerk shall seal and attest all contracts of the city and all licenses, permits and such other documents as shall require this formality.

3.004 **Money collected** --- The Clerk shall turn over all money received in the office on behalf of the city to the City Treasurer on the first of each month with a statement as to the source thereof.

3.005 **Accounts** - The City Clerk shall keep accounts showing all money received in the office and the source and disposition thereof; and such other accounts as may be required by statute or ordinance.

3.006 **Records** --- The Clerk is required to attend all meetings of the City Council and to keep a full account of its proceedings. In addition to the record of ordinance and other records which the Clerk is required by statute to keep, the Clerk shall keep a register of all licenses and permits issued, and the payments thereon; and such other records as may be required by the Council.

3.007 **Seal** --- The City Clerk shall be the custodian of the city seal, and shall affix its impression on documents whenever this is required.

3.008 **Documents** --- The City Clerk shall be the custodian of all documents belonging to the city which are not assigned to the custody of some other officer by the Mayor or Council.

3.009 **Indexes** --- The Clerk shall keep and maintain a proper index to all documents and records kept in that office so that ready access thereto and use thereof may be had.

3.010 **Deputy** --- The City Clerk may appoint a deputy to serve under the Clerk's supervision that will exercise all powers of the Clerk in the Clerk's absence and who shall receive such compensation as may be provided by the City Council.

3.011 **To advertise for printing** --- The City Clerk shall, on the third Tuesday of April, and on the following day, advertise in each daily newspaper of the City of Quincy inviting proposals for the following contracts:

(1) For the publication in an English language newspaper, which shall be published daily in the City of Quincy, of those matters and things required by law or any ordinance of the city to be published in a newspaper, unless there be only one such newspaper in the city.

(2) For the printing and furnishing the official journal and annual report and all other documents which the council shall order printed. Separate bids shall be made for each of said contracts, which bids shall be sealed and directed to the City Clerk's office within the time specified in said advertisement and each contract shall be let to the lowest responsible bidder.

3.012 Printing --- The Clerk is hereby authorized to have printed, at a cost not to exceed the amount appropriated or designated by the Council, the journal of the proceedings of the Council and all other documents which the Council shall order printed. The Clerk is also authorized to cause to be published as provided by statutes and ordinances, reports or other documents which the law or any ordinance requires to be published. The Clerk shall, biannually, cause to be reprinted such portions of this code as may be necessary to keep the same current, along with a cumulative supplementary index.

3.013 Town Clerk --- The City Clerk shall be Ex-Officio Town Clerk.

CHAPTER 4

THE CITY TREASURER

Section 4.001 <u>Election - term</u> --- The City Treasurer shall be elected and serve for a four year term and until his successor is qualified as is provided by statute. The term of office for an elected City Treasurer shall commence on the first regular meeting in the month following such person's election.

4.002 <u>General duties</u> --- The Treasurer shall perform such duties as may be prescribed for him by statute or ordinance. He shall receive all money paid into the city, either directly from the person paying it or from the hands of such other officer or employee as may receive it, and he shall pay out money only on vouchers or orders properly signed by the City Comptroller and the Mayor.

4.003 <u>Deposit of funds</u> --- The Treasurer shall deposit the city funds in such depositories as may be selected and approved from time to time by the City Council and as is provided by statute, and said funds shall be kept separate and distinct from any private, personal or non-city funds. Of the banks which may be designated as approved depositories by the City Council, the City Treasurer shall have the authority to determine and designate from time to time, in which banks and what amounts such funds shall be deposited. All funds received by the City Treasurer shall, to the greatest extent possible, and consistent with general government accounting standards, be combined and consolidated into a general account and except as otherwise provided by applicable federal or state law or regulation or otherwise by contract, grant or other agreement, including, but not limited to, funds received on behalf of the Library Board, Police Pension Board, Fire Pension Board, revenue bonds or other similar restricted funds or receipts.

4.004 <u>Records</u> --- The Treasurer shall keep records showing all money received by him, the source from which it was received, and the purpose for which it was paid out; and he shall keep a record showing at all times the financial status of the city.

4.005 <u>Accounts</u> --- The City Treasurer shall keep such books and accounts as may be required by the City Council, and shall keep them in the manner required by the Council, to include an accurate account of all debts due to the city.

4.006 <u>Reports</u> --- The Treasurer shall make monthly reports to the City Council showing the state of the finances of the city, and the amounts received and spent during the month which reports shall be filed, and he shall make an annual report at the close of the fiscal year with the total amount of all receipts and expenditures of the city and his transactions as Treasurer during the preceding fiscal year.

4.007 <u>Accounts - records</u> --- He shall also keep an accurate account of all debts due from or owing to the city. He shall keep a book in which he shall enter a correct list of all funds, notes or other obligations given by or payable to the city, with the date thereof, the person to whom payable, the person to whom or by whom payable, the rate of interest, the time and manner in which the principal and interest are payable, such other particulars as may be necessary to the full understanding thereof; and when any city bonds are surrendered, cancelled or paid, such book shall show the fact; and in his annual report to the City Council, the Treasurer shall describe

particularly the bonds sold, exchanged or redeemed during the fiscal year, and give an itemized statement of the expense thereof.

4.008 <u>Bond register</u> --- The Treasurer shall keep in his office, in a book provided expressly for that purpose to be known as the "Bond Register", a full and correct list of all outstanding bonds of the city showing the number, amount, date of issue, time of maturity, rate of interest, and place of payment of each bond and for what and to whom the same was issued; and when any city bonds are surrendered, cancelled or paid, said register shall show the fact, and in his annual report to the Council, the Treasurer shall describe particularly the bonds sold, exchanged or redeemed during the fiscal year, and give an itemized statement of the expenses thereof.

4.009 <u>Register of warrants</u> --- The Treasurer shall keep a register of all warrants, bonds or orders filed with him or paid by him and all vouchers, as is required by statute.

4.010 <u>City Collector</u> --- The City Treasurer shall be Ex-Officio City Collector and shall perform all duties prescribed by statute for the collector of special taxes and special assessments.

4.011 <u>Town Collector</u> --- The City Treasurer shall be Ex-Officio Town Collector.

4.012 <u>Deputy</u> --- The City Treasurer may appoint a deputy to serve under his supervision who shall receive such compensation as may be provided by the City Council. The deputy shall also have the power and authority to renew investments of the city in the absence of the City Treasurer.

4.013 <u>Bond</u> --- The Treasurer shall give bond in such sum as may be required by the City Council, which bond shall be an amount of money that is not less than 3 times the latest federal census population or any subsequent census figure used for motor fuel tax purposes, with sureties to be approved by the Council. The bond shall be conditioned upon the faithful performance by the Treasurer of the duties of office, and to indemnify the city for any loss due to any neglect of duty or wrongful act on the part of the Treasurer.

4.014 <u>Checks drawn on insufficient funds</u> --- The City Treasurer shall impose a reasonable fee upon any person presenting to the Office of the City Treasurer a personal check, bank draft or other negotiable instrument drawn on insufficient funds.

CHAPTER 5

COMPTROLLER

Section 5.001 **Creation of office - term** --- There is hereby created the office of City Comptroller who shall hold his office for the term of four years and until his successor is appointed and qualified.

5.002 **Appointment** --- The City Comptroller shall be appointed by the Mayor, by and with the advice and consent of the City Council.

5.003 **Comptroller's clerk** --- The Comptroller, with the advice and consent of the Mayor and City Council, may appoint such assistants, clerks and subordinates as the City Council may authorize, and shall be held responsible for the fidelity of the persons so appointed by him and may remove them at his pleasure.

5.004 **Duties** --- The Comptroller shall be charged with, and shall exercise a general supervision over all officers of the city, charged in any manner with the receipt, collection or disbursement of the city revenues, and the collection and return of such revenues into the city treasury. He shall be the fiscal agent of the city, and as such, shall have charge of all deeds, mortgages, contracts, judgments, notes, bonds, debts, and chooses in action, belonging to the city except such as are directed by statute or ordnance to be deposited elsewhere and shall possess and carefully preserve all assessment warrants and the return thereof made by any collector or receiver of assessments, or special taxes, and all leases of markets, wharfing privileges and other property of the city. He shall have supervision over the city debts, contracts, obligations, loans and liabilities of the city, the payment of interest, and over all generally, in subordination to the Mayor and the City Council, to exercise supervision over all such interests of the city, as, in any manner, may concern or relate to city finances, reveries and property.

5.005 **Records** --- The Comptroller shall, under the direction of the Mayor and Finance Committee of the Council, open and keep in a clear and methodical manner, a complete set of books, wherein shall be stated among other things the appropriation of the year for each distinct object and branch of expenditure and also, the receipts from each and every source of revenue, so far as can be ascertained. Such books, and all papers, vouchers, contracts, bonds, receipts and other things kept in his office shall be subject to the examination of the Mayor, the members of the City Council or any committee or committees thereof.

5.006 **Settlement of claim** --- The Comptroller shall revise and audit all accounts or claims allowed by the City Council in which the city is concerned, either as debtor or creditor, where provision for their adjustment is not otherwise made and provided by law or ordinance; and he shall draw his warrant in due form upon the City Treasurer therefore. But if upon examination of any such accounts or claim, he shall have reason to doubt its correctness, it shall be his duty to submit the same to the Finance Committee for its decision thereon; and also make report thereof to the City Council.

5.007 **Verification of claims** --- In making such adjustments and settlements, the Comptroller shall be authorized to require any claimant, or claimants, to file with him a statement, in writing, under oath, as to any fact, matter or thing, concerning the correctness of any account, claim or demand presented against the city.

5.008 <u>Warrants - records</u> --- The Comptroller shall keep an accurate record of all warrants drawn upon the City Treasurer showing the date, number and amount of each, the name of the person in whose favor drawn, and the fund out of which each warrant is made payable. All countersigned by the Comptroller, and shall specify the fund to which said sum is chargeable and the person to whom payment is to be made; and no money shall be otherwise paid than upon such warrant so drawn.

5.009 <u>Appropriations exhausted - report</u> ----- Whenever any appropriation or fund is exhausted, the Comptroller shall, without delay, notify the City Council thereof, and he shall not thereafter draw any warrant against such fund or appropriation until the same shall be renewed.

5.010 <u>Unexpended appropriations</u> --- It shall be the duty of the Comptroller to transfer and place to the credit of the general fund all unexpended balances of appropriations remaining at the close of each fiscal year. Provided that no such transfer shall be made or disposition ordered of any trust fund, or any fund arising from special assessments or special taxation, nor in cases where contracts have been made or liabilities incurred on account of any such appropriations and remain uncompleted or unpaid at the close of the fiscal year, nor of any fund created for any special purpose or the payment of any liability exclusively provided for by taxation.

5.011 <u>Accounts - records</u> --- Said Comptroller shall keep a detailed account of the city revenues, and of each separate fund crediting the same with all receipts or appropriations and charging it with all warrants drawn thereon, and he shall charge each warrant to the fund or appropriation against which it is drawn.

5.012 <u>Monthly statements of money received and expended</u> --- The Comptroller shall require all officers charged in any manner with the receipt, collection or disbursement of city revenues, to make monthly statements in writing under oath, showing in detail all such receipts, collections and disbursements and to file the same in the office of the Comptroller; and whenever any officer shall refuse or neglect to make such reports or adjust his accounts and lay over to the proper officers any moneys in his possession belonging to the city, the Comptroller shall cause a notice in writing to be served upon such officer and his sureties demanding a settlement of his accounts, forthwith; and in case of the refusal or neglect of such officer, for a period of five days after said notice, to make or offer settlement and pay over said moneys, the Comptroller shall report such officer to the Mayor, who shall immediately remove him from office, and proceedings for the recovery of any moneys due to the city shall be instituted at once against such delinquent and his sureties.

5.013 <u>Monthly statement - contents</u> --- The Comptroller shall, on or before the first day in each and every month make and submit to the City Council a statement or report in writing of all moneys received by the city and warrants drawn by him during the preceding month, showing therein from what sources and on what account the moneys were received, and for what purpose and what account the warrants were drawn, and the unexpended balances to the credit of each fund.

5.014 <u>Annual budget report</u> --- On or before May 15 of each year, and before the annual appropriation ordinance is prepared by the corporate authorities, he shall submit to the corporate authorities a report of his estimate, as nearly as may be, of the money necessary to defray the expenses of the municipality during the current fiscal year. For the purpose of making this report, he is authorized to require all officers to submit statements of the condition and expenses of their respective officers or departments, with any proposed municipal improvements and the probable expenses thereof, all unperformed contracts, and the amount of all unexpended appropriations of the preceding year.

In this report, he shall (1) classify the different objects and purposes of expenditure, giving, as nearly as may be, the amount required for each; (2) show the aggregate income of the preceding fiscal year from all sources; (3) show the amount of liabilities upon which interest is to be paid; (4) show the bonds and debts payable during the year, when due and payable; and (5) give such other information to the corporate authorities as he deems necessary, so that the corporate authorities may fully understand the demands upon the municipality for the current fiscal year.

5.015 <u>Annual settlement</u> --- The Comptroller and the Finance Committee shall meet annually upon the close if each fiscal year and examine and compare the reports and statement; made by the Comptroller and Treasurer and other City Officers, and shall report thereon to the City Council.

5.016 <u>Ex-Officio Comptroller</u> --- The City Comptroller shall be the Ex-Officio Town Comptroller.

5.017 <u>Deputy</u> --- There is hereby created the office of Deputy Comptroller, who shall be appointed by the Comptroller. The deputy shall perform duties as assigned by the Comptroller and shall also have the power and authority to perform the duties and assume the responsibilities of the Comptroller in the Comptroller's announced absence.

CHAPTER 6

LEGAL DEPARTMENT

Section 6.001 Creation of office --- There is hereby created the office of Corporation Counsel, an executive office of the city. The Corporation Counsel shall be appointed by the Mayor, by and with the advice and consent of the City Council.

6.002 Suits and actions --- The Corporation Counsel shall prosecute or defend any and all suits or actions to which the city may be a party or in which it may be interested, or which may be brought against, or by, any officer of the city on behalf of the city, or in the capacity of such person as an officer of the city.

6.003 Judgments --- It shall be the duty of the Corporation Counsel to see to the full enforcement of all judgments or decrees rendered or entered in favor of the city in courts of record, and of all similar interlocutory orders.

6.004 Advice --- The Corporation Counsel shall be the legal advisor of the city and of all committees, commissions, boards and officials thereof and shall render advice on all legal questions affecting the city. Upon request of the Mayor or Council, he shall reduce such opinion to writing.

6.005 Drafting contracts and ordinances --- It shall be the duty of the Corporation Counsel to draft or supervise the phraseology of any contracts, leases or other documents or instruments to which the city may be a party. It shall further be the duty of the Corporation Counsel to draft ordinances and resolutions as may be required covering any subject within the powers of the city; and the Corporation Counsel shall designate all ordinances with an appropriate chapter, article and section number keyed to this code.

6.006 Assistant Corporation Counsel --- There is hereby created the office of Assistant Corporation Counsel which shall be filled by appointment by the Mayor, by and with the advice and consent of the City Council. It shall be the duty of the Assistant Corporation Counsel to assist the Corporation Counsel in its duties.

6.007 City Attorney --- There is hereby created the office of City Attorney which shall be filled by appointment by the Mayor, by and with the advice and consent of the City Council. It shall be the duty of the City Attorney to prosecute all cases for violation of city ordinances, and to assist the Police Department in legal problems concerning its work and all claims for amounts due the city under the City of Quincy purchase tax ordinance (Municipal Code, Chapter 17, Article III). The City Attorney shall also assist the Corporation Counsel in his duties.

6.008 Assistant City Attorney --- There is hereby created the office of Assistant City Attorney which shall be filled by appointment of the Mayor by and with the advice and consent of the City Council. It shall be the duty of the Assistant City Attorney to assist the City Attorney and Corporation Counsel in their duties.

6.009 Additional counsel --- Only the City Council may retain the services of other counsel to give advice or services to the city.

6.010 <u>Quincy Park District</u> --- The members of the legal department of the City of Quincy are authorized and empowered to prosecute violations of all ordinances, rules and regulations of the Quincy Park District, a municipal corporation, either in the name of the City of Quincy or the Quincy Park District, to the full extent authorized from time to time whether expressly or impliedly, by the board of park commissioners of the Quincy Park District.

CHAPTER 7

DEPARTMENT OF PUBLIC WORKS

Section 7.001 Creation --- There is hereby created and established and shall now hereafter be maintained and recognized in and for the city of Quincy a Public Works Commission. Said commission shall be composed of 18 commissioners whose terms of office shall be three (3) years each except as hereinafter provided for the commissioners first appointment and except further that the Corporation Counsel and the Director of Administrative Services, who shall be voting members of said commission, and the Mayor, who shall be an ex-officio member of a11 committees of the commission and of the commission sitting as whole but who shall vote only in the event of a tie vote among those present.

7.002 Appointment --- As soon as practical after the passage and approval of this article, the Mayor, by and with the approval of the City Council, shall appoint five persons as commissioners of such commission for a term expiring December 1, 1971; four persons as commissioners on such commission for a term expiring December 1, 1972; and four persons as commissioners of such commission for a term expiring December 1, 1973; and annually thereafter, as the term of such commissioners expire from time to time, the Mayor, by and with the approval of the City Council, shall appoint commissioners for the full term of three years. No commissioner shall be re-appointed after having served two three-year terms in office. In the event of any vacancies occurring in said commission by death, resignation, and removal or otherwise, the vacancy shall be filled in like manner for the unexpired term. At least twelve of the commissioners shall be residents of the City of Quincy. A letter of intent shall be sent by the mayor to each alderman not less than ten (10) days before nomination at a meeting of the City Council of a person for appointment to the commission. Such letter should specify the committee on which such nominee would serve and shall contain comments on the qualifications of such proposed nominee. No officer or employee of the city shall be appointed as a commissioner, and the acceptance of any office or employment under the city by a commissioner shall be deemed a resignation of such commissioner.

Any commissioner may be removed at any time by the City Council whenever, in the opinion of the City Council the interest of the city requires and shall automatically be removed from office if he should fail to attend more than one-half (1/2) of the committee and commission meetings within any one year period.

7.003 (Reserved)

7.004 Compensation --- The compensation of each of the members of the commission except ex-officio members shall be $500 per year and the commission chairman $700 per year payable in semi-annual installments during their respective terms of office, and they shall receive no other benefits, perquisites, emoluments or fees whatever; provided, however, that the actual amounts paid out by any of said commissioners for personal traveling expenses while engaged in city business shall be repaid to said commissioner.

7.005 Organization --- The commission shall be divided into five separate committees each concerned principally with the operation of each of the five departments namely, water, sanitary, streets, aeronautics, and inspection. The Director of Administrative Services shall serve as a member on the Street Committee and the Corporation Counsel shall serve as a member on the Inspection Committee of which at least one shall be a practicing architect.

The commission shall organize as soon as practical after the appointment and qualifications of the commissioners thereof by selecting one of such commissioners as chairman of said commission, one of such commissioners as vice-chairman of said commission. The Director of Public Works, or one of his assistants, hereinafter provided for, shall serve as secretary of said commission and the City Treasurer shall serve as treasurer of said commission. The chairman and vice-chairman shall hold office for terms of one year each and until their respective successors shall be selected. Said commission shall also adopt such rules, regulations and resolutions as it may deem advisable for the proper management and conduct of the business of the commission and for carrying into effect the objects for which the same has been established but in no event shall the same be valid to the extent that they conflict with action of the City Council.

7.006 Duties --- The commission shall immediately study and confer regarding the basis for agreements to be recommended to the City Council for the operation of the various departments under the jurisdiction of such commission. The commission and the commissioners thereof shall give to the business of managing, operating, improving and maintaining the various departments of the city such attention as the nature and character of such an undertaking demands.

7.007 Meetings --- The entire commission shall meet once each month on such date as the commission shall determine. Committees of the commission shall meet in conjunction with the three members of the City Council corresponding committee as often as shall be necessary in the interest of the department for which such committee is primarily responsible. A report of activities of each committee shall be made to the commission at its meeting next following such committee meeting for action by the commission. Each member of the commission committee and council committee for each such department shall have one vote on all matters relating to business of that committee, each committee shall elect its own chairman for a period of one (1) year. A majority of the commission shall constitute a quorum for a commission meeting and three members of a committee shall constitute a quorum for a committee meeting. All tie votes of the commission or any committee hereof shall be submitted to the Mayor on the business day following such action who shall have five (5) days to act thereon. Failure of the Mayor to vote within such period shall constitute loss of such motion or other action.

7.008 Personnel --- There is hereby created the office of Director of Public Works, the office of City Engineer, and the office of Assistant Director of Public Works, the office of Superintendent of Water, Superintendent of Sanitation, Superintendent of Street and Bridge, the Superintendent of Aeronautics (also to be known as Airport Manager), Superintendent of Solid Waste Disposal, each of which shall be appointed for a term of four years by the City Council after consultation with and recommendation of the Public Works Commission unless otherwise provided by statute or ordinance. The Director of Public Works shall be Ex-Officio Secretary of the commission and shall be responsible for the overall operation of the five departments named herein. The City Engineer shall be responsible for all public works planning, traffic engineering, and public works inspection. The Assistant Director shall be responsible for coordination of all work within the five departments, assignment of city equipment and issuance of permits. The Superintendent of Water shall supervise the operation and maintenance of water filtration and distribution system and the collection of water charges. The Superintendent of Sanitation shall supervise the

operation and maintenance of the sanitary and storm sewers sewage disposal plant and garbage collection. The Superintendent of Street and Bridge shall supervise operation and maintenance of the city streets and other public properties, including tree maintenance and removal, the city garage, parking lots and parking meters. The Superintendent of Aeronautics shall supervise the operation and maintenance of the Quincy Municipal Airport. The Superintendent of Solid Waste Disposal shall supervise the operation and maintenance of the landfill. All employees of the various departments shall be appointed by the Director of Public Works upon action by the respective joint committees of both the council and the commission. Promotions shall be made in the same manner if within the same department, but if a promotion is made from one department to another then such promotion shall be made by the joint action of the committees of both departments. Job classification of all employees, pay scale and other working conditions shall be uniformly applied to all employees in accordance with a personnel code to be hereafter adopted by the City Council upon recommendation of the commission. No person shall serve in any office named in this section after he has reached his 70th birthday and any person so appointed may be removed at any time by action of the City Council unless otherwise provided by statute or ordinance.

7.009 Records --- Said commission shall keep full and accurate minutes of its proceedings. The City Treasurer shall provide the City Council and the commission with reports and accounting of the income and disbursements of the various funds of the public works departments. Said books and accounts shall be further made available for inspection by the City Council and commission as from time to time required by the council or commission.

7.010 Salaries and expenditures --- The salaries paid to the various officials and the job classifications and salaries paid to the various employees under the direction of the commission shall, after recommendation of the commission, be established by the City Council through its appropriation ordinance, or other ordinance authorizing expenditures. The commission shall have the power to contract for services and materials for the operation of the various departments, but all expenditures in excess of $3,000.00 shall first be approved by the City Council.

7.011 Interest in contracts --- No commissioner shall be interested directly or indirectly in any contract or job for work or material or profits thereof, or service to be furnished or performed in the construction, operation, maintenance, extension or improvement of any city facilities. Any commissioner who in any manner contributes money, labor or other valuable things to any person for election purposes shall be removed from such office.

7.012 Regulations for personnel ---

(1) **Application**: Except as may otherwise specifically be provided in the Personnel Code of the City of Quincy (Chapter 13, Article II), the regulations following shall apply to all employees employed by the city in the various departments of the Public Works Commission with the exception of those employees specifically exempt herein.

(2) **Discharge**: No employee of the city shall be discharged without cause. It is not the policy of the city to suspend or discharge personnel without at least one warning. However, the following list of offenses, practices and actions, because of their serious nature, may subject

personnel to immediate suspension or discharge without notice, and may be considered sufficient cause for discharge.

(a) Violation of any law with particular reference to:

1.) Carrying concealed weapon, fighting or attempting bodily injury to another.

2.) Stealing, making fraudulent records, or malicious mischief resulting in the injury or destruction of property of others or of the city.

(b) The introduction, possession or use on the job of intoxicating liquors or habit forming drugs or reporting for duty under the influence of such liquors or drugs.

(c) Smoking in prohibited areas.

(d) Failure to immediately report accidents or personal injury to proper authorities.

(e) Refusal to perform regular work or other reasonable tasks assigned.

(f) Profane or abusive language towards other personnel or the public.

(g) Absence from duty without permission except for causes or circumstances beyond the employees control which prevents the giving of notice or leaving a post of duty without permission or without proper relief.

(h) Profiting directly or indirectly from any contract, purchase, sale, or service in connection with city employment or accepting any free or preferred service or benefit by reason of such employment, without the approval of the superintendent.

(i) Sleeping while on duty.

(j) Failure to exercise reasonable caution and care to prevent damage to or loss of the department's or other property or equipment.

(k) Failure to report at once a disease or condition which might endanger fellow employees.

(l) Inaccurate or unthoughtful testimony given in accident investigations or in connection with physical examinations.

(m) Disorderly or immoral conduct not in accordance with the common standards of decency or propriety.

(n) Offering or receiving money or other valuable consideration in exchange for a job, better working place or change in working conditions.

After any person has been warned once, violation of the following rules may result in immediate suspension or dismissal without notice:

(o) Any conduct not specifically mentioned above which interferes with or obstructs in any manner the normal operations of the department or endangers the safety of himself or any other employee.

(p) Intimidation or molestation of any individual or group of individuals.

(q) Other conduct which warrants disciplinary action.

(r) Solicitation of funds without the superintendent's approval.

(s) Unauthorized entry on city premises.

(t) Carrying on unauthorized activities during working hours or unauthorized use of city equipment or property.

(u) Failure to satisfy a judgment against the employee or to make reasonable payments thereon in accordance with his means.

(v) Falsifying time records, taking unauthorized rest periods, or loitering.

Authorized rest periods or work breaks shall be only at the time and places posted by the superintendent on the department bulletin board.

(3) **Hearing on discharge**: Any employee discharged shall be notified in writing of the reason for the discharge. Any employee shall be entitled to a hearing on his discharged by filing his request in writing with the Mayor, or Director of Public Works, within five (5) days after his discharge. A committee consisting of the Mayor, Public Works Director, Chairman of the Joint Committee of the City Council and Public Works Committee of the department employing said employee, and two (2) aldermen shall hear all matters relating to discharge. Aldermen on the committee shall be appointed by the Mayor, one from each political party. Each committee member shall have one vote on all matters. A majority vote of the committee, i.e. three (3) votes shall be necessary to sustain the discharge.

(4) **Conflicts**: Any conflicts with the provisions of this article with the provisions of any collective bargaining agreement shall to the extent of such conflict be inapplicable. However, all future bargaining agreements shall be consistent with this article unless unusual circumstances exist.

(5) **Exemptions**: The following personnel are hereby expressly exempt from the provisions of this article and may be discharged without cause by the Mayor with the approval of the City Council or recommendation of the Public Works Commission, at the termination of any term of appointment. This article shall not be construed to deprive anyone covered hereunder of any benefits accrued prior to the passage hereof.

(a) Director of Public Works.
(b) Assistant to Director of Public Works.
(c) City Engineer.
(d) Assistant to City Engineer.
(e) Superintendent of Water Department.
(f) Superintendent of Sanitation Department.
(g) Superintendent of Streets.
(h) Assistant Superintendent of Streets.
(i) Superintendent of Aeronautics.
(j) Minimum Housing Director.
(k) Superintendent of Solid Waste Disposal

CHAPTER 8

THE FIRE DEPARTMENT

Section 8.001 <u>Creation of department</u> --- There is hereby created the Fire Department, an executive department of the city. The Fire Department shall consist of the Fire Chief, who shall be chief of the department, and such other members as may be provided from time to time by the City Council.

8.002 <u>Fire Chief</u> ---

(1) **Establishment of office**: There is hereby created the office of Fire Chief, an executive office of the City. The Fire Chief shall be appointed by the Board of Fire and Police Commissioners for a term of office not to exceed five (5) years (subject to renewal as otherwise provided in this code), and which term, shall in any event, terminate on the last day of the fiscal year) of the City, of the final year of said appointment. Unless otherwise approved by the City Council, the office of Fire Chief shall be filled by appointment among all personnel of the Fire Department.

(2) **Duties and powers**: The Fire Chief shall be the head of the Fire Department and shall be responsible for the care of the apparatus belonging thereto and the performance of the duties and powers thereof by the members of the department. The Fire Chief shall have such further duties and powers as from time to time prescribed by ordinance or by the City Council.

(3) **Records and reports**: The Fire Chief shall keep such record and make such reports regarding the activities of the Fire Department and its members as may be required by the Mayor, the City Council or the Board of Fire and Police Commissioners, whether by ordinance or otherwise.

(4) **Notice of renewal/nonrenewal of term of office**: The Board of Fire and Police Commissioners shall, not less than four (4) months prior to the expiration of the term of office of the Fire Chief, give notice to the Chief, and the City Council, of its (board's) decision to either renew or not renew said appointment. If the board fails to either make or give notice of a decision to renew or not renew said appointment, by said four month deadline, the City Council may, on or before thirty (30) days before the expiration of their term, elect to give notice of renewal or nonrenewal of the appointment. If both the commission and the City Council fail to give notice of nonrenewal of said appointment, the term of the Chief shall automatically renew for an additional five (5) year term.

8.003 Deputy Chief ---

(1) **Establishment of office**: There is hereby created the office of Deputy Fire Chief, an executive office of the city. The Deputy Fire Chief shall be appointed by the Board of Fire & Police Commissioners. Unless otherwise approved by the City Council, the office of Deputy Fire Chief shall be filled by appointment from among the personnel of the Fire Department holding the rank of lieutenant and above.

(2) **Duties and powers**: The Deputy Fire Chief shall oversee and coordinate the activities of all Service Training Officers and all Service Fire Prevention Officers. The Deputy Chief shall assist the Fire Chief with the Fire Chief's duties as directed by the Fire Chief. In the absence of the Fire Chief, or in the a event of a vacancy in the office of Fire Chief, the Deputy Fire Chief shall have charge of the activities of the Fire Department. The Deputy Fire Chief shall have such further duties and powers as from time to time prescribed by ordinance or by the City Council.

(3) **Tenure**: If a member of the department is appointed Deputy Fire Chief prior to being eligible to retire on pension, he shall be considered as on furlough from the rank held

immediately prior to his appointment as Deputy Chief. If his term ends, or if he resigns as Deputy Chief or is discharged as Deputy Chief prior to obtaining eligibility to retire on pension he shall revert to and be established in such prior rank, and thereafter be entitled to all the benefits and emoluments of such prior rank without regards to whether a vacancy then exists in such rank.

(4) **Removal or discharge - hearing or charges - retirement**: The Deputy Fire Chief shall be subject to the same provisions for removal, discharge, suspension and retirement as applicable to other members of the Fire Department according to Section 11.611 of this code (Chapter 11, Article VI, Section 11.611 of the municipal code of Quincy, Illinois).

8.004 Members - appointment --- All members of the Fire Department after examination, shall be appointed by the Board of Fire and Police Commissioners and promotions shall be made in the same manner as is provided by ordinance, or in the absence thereof, by statute. Neither any fireman, nor the Fire Chief (during the term of the chief's appointment) shall be discharged, demoted or suspended without salary except after a hearing before the Fire and Police Commission as otherwise provided by this code. Members of the Fire Department shall receive such compensation as the City Council may determine.

8.005 Command --- The command of the Fire Department shall be as prescribed by the Fire Chief. Each shift shal1 be commanded by a Shift Commander or an Assistant Chief and each company by a Lieutenant. All members of the department shall obey orders and directions of their superiors.

8.006 Functions of department --- It shall be the function of the Fire Department and the duty of the members thereof to prevent and extinguish accidental or destructive fires occurring in the city and to enforce all ordinances relating to the fire hazards.

8.007 Spectators at fires --- It shall be the duty of all spectators at fires to obey all the orders of the members of the Fire Department on duty there with respect to keeping away from the scene of the fire or the handling of or interference with the apparatus of the Fire Department.

8.008 Property --- The members of the Fire Department shall have charge and custody of property removed by them from the scene of a fire to prevent and reduce loss or damage until the same is turned over to the owner or his agent.

8.009 Causes of fires --- It shall be the duty of the Chief of the Fire Department to investigate the cause of any accidental or destructive fires occurring in the city; and in case there is reason to suspect that there was any criminal act or violation of a City ordinance in connection therewith he shall report the same to the City Attorney.

8.010 Arrests --- The Fire Chief and members of the Fire Department shall have the power to arrest any person at or near the scene of an accidental or destructive fire who shall interfere with the Fire Department in the performance of its duties or who shall commit any crime or violate any ordinance in connection therewith.

8.011 <u>Rules and regulations</u> --- The Board of Fire and Police Commissioners, after consultation with the Fire Chief, may make or prescribe such rules and regulations for the conduct and guidance of the members of the department as they shall deem advisable; and such rules, when approved by the Mayor and Council, shall be binding on such members.

8.012 <u>Repairs to buildings</u> --- The Chief of the Fire Department and the Assistant Chiefs are hereby authorized to examine any building in the city as often as they may deem necessary and to cause the owners or occupants thereof to make such repairs as may be necessary for the protection of property and life.

8.013 <u>Officers</u> --- The Fire Department may have an election of officers known as Officers of the Fire Department. All members of the department shall be entitled to vote. Such officers may be elected to offices as desired by the department, except that one office must be a treasurer. The board shall have a membership of 5 firemen to oversee this account.

CHAPTER 9

THE POLICE DEPARTMENT

Section 9.001 <u>Creation of department</u> --- There is hereby created a Police Department, an executive department of the city. The Police Department shall consist of the Chief of Police and such number of Captains, Lieutenants, Sergeants, Patrol Officers and Civilian Personnel as may be provided from time to time by the City Council.

9.002 <u>Office of Chief created</u> ---

(1) **Creation - appointment**: There is hereby created the office of Chief of Police. The chief shall be appointed by the Board of Fire and Police Commissioners, for a term of office not to exceed five (5) years (subject to renewal as otherwise provided in this code), and which term, shall in any event, terminate on the last day of the fiscal year of the City, of the final year of said appointment. The Chief shall be Ex-officio City Marshall and Superintendent of Police.

(2) **Notice of renewal/nonrenewal of term of office**: The Board of Fire and Police Commissioners shall, not less than four (4) months prior of the expiration of the term of office of the Police Chief, give notice to the Chief, and the City Council, of its (board's) decision to either renew or not renew said appointment. If the board fails to either make or give notice of a decision to renew or not renew said appointment, by said four month deadline, the City Council may, on or before thirty (30) days before the expiration of their term, elect to give notice of renewal or nonrenewal of the appointment. If both the Commission and the City Council fail to give notice of nonrenewal of said appointment, the term of the Chief shall automatically renew for an additional five (5) year term.

9.003 <u>Duties of Chief</u> --- The Chief of Police shall keep such records and make such reports of the activities of his department as may be required by statute or by the City Council. The Chief shall be responsible for the performance by the member of the Police Department and of its functions, and all persons who are members of the Police Department shall serve subject to the orders of the Chief of Police. He shall cause the City Attorney to be informed of any suit instituted by him, or through his department, wherein the interests of the city may require the presence of said attorney at the trial thereof, and no case shall be disposed of unless the City Attorney or, in his absence, the Corporation Counsel shall have been notified of the same. The Chief of Police shall, by virtue of his office, be charged with the operation, management and conduct of the City Jail as the Superintendent thereof and that he can be removed as Superintendent by the Mayor with the advice and consent of the Council.

9.004 <u>Duties</u> --- It shall be the duty of the members of the Police Department to see to the enforcement of all of the ordinances of the city and all statutes applicable therein; and to preserve order and prevent infractions of the law and arrest violators thereof. When any violation of any state statute or city ordinance shall come to the knowledge of the Chief of Police, or any member of the Police Department, he shall immediately make, or cause to be made, the proper complaint before the circuit court or a court of competent jurisdiction, and he shall cause all witnesses to be subpoenaed and all other evidence procured for trial. They shall take notice of all nuisances, impediments, obstructions and defects in or upon the public ways of the city and shall cause the same to be removed or abated or give immediate notice thereof to the proper City Officer.

9.005 <u>Members - appointment</u> --- The members of the Police Department shall, after examination, be appointed by the Board of Fire and Police Commissioners and promotions shall

be made in the same manner as is provided by statute. Neither any policeman, nor the Police Chief (during the term of the chief's appointment) shall be discharged, demoted or suspended without salary except after a hearing before the Fire and Police Commission as otherwise provided by this code. The Chief of Police may, however, suspend a member of the department without pay for not more than five days. Members of the Police Department shall receive such compensation as the City Council may determine.

9.006 Service process --- No member of the Police Department, except the Chief or a Captain, shall serve any process except on command of the Chief of Police or a Captain.

9.007 Conduct of members --- It shall be the duty of every member of the Police Department to conduct himself, or herself, in a proper and law abiding manner at all times and to avoid the use of unnecessary force or discourtesy to the public. Each member of the department shall obey the lawful orders and directions of his superior.

9.008 Witness fees --- Every member of the Police Department shall appear as witness whenever this is necessary in a prosecution for a violation of an ordinance of the city or of any state or federal law. No such member shall retain any witness fee for service as a witness in any action or suit to which the city is a party and any fees paid for such services shall be turned over to the Chief who shall deposit the same with the City Treasurer.

9.009 Rules and regulations --- The Chief of Police may make or prescribe such rules and regulations for the conduct and guidance of the members of the department as he shall deem advisable.

9.010 Special police ---

(1) **Generally**: Any person of good character having duties which require such authority may be appointed a temporary special policeman by the Mayor with the advice and consent of the Council; provided that except upon authorization by the Council, no such temporary special policeman shall be entitled to any compensation from the city nor shall such temporary special policeman be considered an employee of the city by reason of such appointment. Temporary special policeman shall obey all rules of the Police Department applicable to them and shall provide a bond with a commercial surety thereon in the sum of five thousand dollars ($5,000) against which any judgment creditor may collect for wrongs suffered in the course of such special policeman acting in such capacity, and maybe deprived of their appointment by the Mayor at any time. The City Clerk shall keep a record of all such appointments.

(2) **Good character**: No person shall be appointed as a special policeman unless he is a person of good character; not an habitual drunkard, gambler or a person who has been convicted of a felony or a crime involving moral turpitude including the following misdemeanor convictions under section 11-5,11-6, 11-7, 11-9, 11-14, 11-15, 11-17, 11-18, 11-19, 12-2, 12-6, 14-4, 16-1, 21-1-3, 24-3.1, 24-5, 25-1, 28-3, 31-1, 31-4, 31-6, 31-7, 32-1, 32-2, 32-3, 32-4, 32-8,and subsections 1, 6 and 8 of section 24-1 of the Criminal Code (IRS s 101 et seq) and convictions of section 31.101. 31.102, 31.104, 31.105, 31.106, 31.107, 31.108, 31.109, 31.111, 31.115, 31.117, 31.118, 31.124, 31.126, 31.141, 31.142, 31.144, 31.146, 31.148 of this code as amended.

9.011 <u>Stolen property - custodian</u> --- The Chief of Police shall have the custody of all lost, abandoned or stolen property recovered in the city.

9.012 <u>Harbor Master</u> --- The Chief of Police shall be Ex-Officio Harbor Master of the City.

9.013 <u>School Crossing Guards</u> --- The Mayor may, with the advice and consent of the Council, appoint one or more school crossing guards whose duties it shall be to direct traffic a school crossings when children are going to and from school. Such guards shall have the power to make arrests for traffic violations while on duty and shall be under the direction of the Chief of Police. They shall wear such distinctive uniforms or insignia as the Chief of Police directs and shall not carry firearms. No bond shall be required as a condition to appointment. The Mayor may revoke any such appointment at any time.

9.014 <u>Auxiliary policemen</u> ---

(1) **Appointment**: The Mayor of the City of Quincy may, with the advice and consent of the City Council, appoint Auxiliary Policemen in such number as the City Council shall from time to time deem necessary. Prior to the appointment of any Auxiliary Policemen, his or her fingerprints shall be taken and no person shall be appointed as such Auxiliary Policeman if such person has been convicted of a felony or other crime involving moral turpitude. The Mayor shall have authority to withdraw or deprive any person of such person's appointment as an Auxiliary Policeman at any time with or without cause. The City Clerk shall keep a record of all appointments made hereunder.

(2) **Employment status**: Auxiliary Policemen shall not be members of the regular Police Department of the city for any purpose, including but not limited to rights on discharge. Auxiliary Policemen shall not be entitled to any compensation from the City or considered employees of the city by reason of such appointment except by prior action of the City Council.

(3) **Assignments**: Auxiliary Policemen shall not supplement members of the regular Police Department of the city in the performance of their assigned and normal duties, except as otherwise provided herein. Auxiliary Police members shall only be assigned to perform the following duties in a municipality:

(a) To aid or direct traffic within the municipality;

(b) To aid in control of natural or man made disaster;

(c) To aid in case of civil disorder as directed by the Chief of Police; and,

(d) Provided, that in cases which render it impractical for members of the regular Police a Department to perform the normal and regular police duties, the Chief of Police of the regular Police Department is hereby authorized to assign Auxiliary Policemen to perform such normal and regular police duties.

(4) **Operations**: Identification symbols worn by such Auxiliary Policemen shall be different and distinct from those used by regular members of the regular Police Department. Auxiliary Policemen shall at all times during the performance of their duties be subject to the direction and control of the Chief of Police. Auxiliary Policemen shall obey all rules of the Police Department applicable to them. Auxiliary Police Officers shall not carry firearms.

(5) **Training**: Auxiliary Policemen, prior to entering upon any of their duties, shall receive a course of training on police procedures as shall be appropriate in the exercise of the

powers conferred upon them, which training and course of study shall be determined and provided by the city.

(6) **Compensation act**: The "Law Enforcement Officers, Civil Defense Works, Civil Air Patrol Members, Paramedics and Firemen Compensation Act", approved September 30, 1969 as now or hereafter amended, shall be applicable to Auxiliary Policemen upon their death in the line of duty described herein as provided by law.

9.015 <u>City relationship with Quincy Park District</u> ---

(1) **Quincy Police Department**: The members of the Police Department of the City of Quincy are authorized and empowered to enforce all ordinances, rules and regulations of the Quincy Park District, a municipal corporation, to the full extent authorized, from time to time, whether expressly or impliedly, by the Board of Park Commissioners of the Quincy Park District, in and about all property of the Quincy Park District. While and with respect to enforcing such ordinances, rules and regulations, the members of the Police Department shall be agents of the Quincy Park District. The authority granted hereby shall not be deemed to limit the additional authority of the members of the Police Department to enforce all ordinances, rules and regulations of the City of Quincy in and about the property of the Quincy Park District.

(2) **Primary jurisdiction**: Although the members of the Quincy Police Department and the Quincy Park District law enforcement officers may have concurrent jurisdiction to enforce certain ordinances, rules and regulations, the Quincy Police Department shall assume primary jurisdiction when it assumes any jurisdiction relative to a particular matter or incident requiring enforcement. The Quincy Park District law enforcement officers shall then assist only to the extent requested by the Quincy Police Department.

9.016 <u>City relationship with Quincy Housing Authority</u> ---

(1) **Quincy Police Department**: The members of the Police Department of the City of Quincy are authorized and empowered to enforce all ordinances, rules and regulation of the City of Quincy and the Quincy Housing Authority to the full extent authorized, whether expressly or impliedly, by the Board of Directors of the Quincy Housing Authority, in and about all property of the Quincy Housing Authority. While and with respect to enforcing such ordinances, rules and regulations, the members of the Police Department shall be agents of the Quincy Housing Authority. The authority granted hereby shall not be deemed to limit the additional authority of the members of the Police Department to enforce all ordinances, rules and regulations of the City of Quincy in and about the property of the Quincy Housing Authority

(2) **Quincy Housing Authority Officers**: The law enforcement officers appointed or designated by the Board of Directors of the Quincy Housing Authority, are hereby authorized and empowered to enforce all ordinances, rules and regulations of the City of Quincy for which a notice of violation may be used in accordance with section 32.003 of this code. The authority and power hereby granted shall be limited to the enforcement of such ordinance, rules and regulations in and about the property of the Quincy Housing Authority. This authority and power shall not be deemed to extend beyond the boundaries of the property of the Quincy Housing Authority. While and with respect to enforcing any ordinances, rules and regulations of the City of Quincy, such law enforcement officers shall be agents of the City of Quincy and subject to such rules, regulations and limitations as prescribed by and directions of the Chief of Police, or the designee of the Chief of Police.

(3) **Primary jurisdiction**: Although the members of the Quincy Police Department and the Quincy Housing Authority law enforcement officers may have concurrent jurisdiction to enforce certain ordinances, rules and regulations, the Quincy Police Department shall assume primary jurisdiction when it assumes any jurisdiction relative to a particular matter or incident requiring enforcement. The Quincy Housing Authority law enforcement officers shall then assist only to the extent requested by the Quincy Police Department.

9.017 <u>Deputy Police Chiefs</u> ---

(1) **Generally**: There is hereby created the positions of two Deputy Police Chiefs. It shall be the duty of the Deputy Police Chiefs to assist the Police Chief in managing and administering the Police Department including, among others, assignments they will be given from time to time by the Chief of Police, but shall include inspection, both operational and functional as well as all aspects of departmental training.

(2) **Selection**: The Deputy Police Chiefs shall be appointed by the Police Chief from among all personnel of the Police Department, with the advice and consent of the Board of Fire and Police Commissioners.

(3) **Tenure**: The Deputy Chiefs shall have no particular tenure in or right to such position. Instead, the Deputy Police Chiefs may be removed at any time by the Police Chief as provided in this section notwithstanding any other provisions of Chapter 11, Article VI, of this code, pertaining to the Board of Fire aid Police Commissioners, or other ordinance, rule, regulation or law generally applicable to the removal of a member of the Police Department. In the event an individual is named Deputy Police Chief and is thereafter removed, such person shall be entitled to resume his or her former place or position with the Police Department at their previously held civil service grade. This provision is not intended, however, to limit the right of the Police Chief, the Board of Fire and Police Commissioners or other applicable authority to remove or discharge such person from the Police Department as otherwise allowed by this code or other applicable ordinance, rule, regulation, or law generally applicable to the removal of a member of the Police Department.

CHAPTER 10

OTHER OFFICIALS AND DEPARTMENTS

ARTICLE I **DIRECTOR OF ADMINISTRATIVE SERVICES**

ARTICLE II **DIRECTOR OF PURCHASING**

ARTICLE III **CITY FORESTER**

ARTICLE IV **DEPARTMENT OF PLANNING & DEVELOPMENT**

ARTICLE V **DEPARTMENT OF HUMAN RESOURCES**

ARTICLE I DIRECTOR OF ADMINISTRATIVE SERVICES

Section 10.101 Establishment --- There is hereby created the office of Director of Administrative Services, the appointment to which shall be made by the Mayor with the advice and consent of the members of the City Council.

10.102 Oath and bond --- The Director of Administrative Services is hereby declared to be a City Official and shall subscribe to the oath of office and shall be bonded in the sum of one thousand dollars before commencing upon the duties of the office.

10.103 Planning duties --- The Director of Administrative Services shall serve as an Administrative Assistant to the Mayor in planning and executing programs of public improvement as proposed by the Mayor and/or enacted by the Council.

10.104 Contracts --- The Director of Administrative Services shall supervise, review, coordinate and approve, as necessary, all contracts and liabilities undertaken or incurred by the City in accordance with the subject to such restrictions as provided by law pertaining to the creation of liabilities against the City and expenditures or appropriations by the City.

10.105 Personnel duties --- Supervises, reviews and coordinates the operations of the Human Resources Department and Human Resources Director.

10.106 Liaison officer --- The Director of Administrative Services shall serve as the liaison officer between the City and the State of Illinois' emergency services and disaster agency; and he shall facilitate the cooperation and protection of the City in the work of disaster prevention, preparedness, response and recovery.

ARTICLE II DIRECTOR OF PURCHASING

Section 10.201 <u>Establishment</u> --- There is hereby created the office of Director of Purchasing, an administrative office, the appointment to which shall be made by the Mayor with the advice and consent of the City Council.

10.202 <u>Duties</u> --- The Director of Purchasing shall have the following duties and responsibilities:

(1) **Coordination - centralization of purchasing**: The Director of Purchasing shall undertake, when economical and practical, to coordinate and centralize all purchase of materials, supplies and equipment by the City of Quincy, including all of its various divisions and departments.

(2) **Purchasing duties**: Except as otherwise provided by this code or otherwise required by law, the Director of Purchasing shall purchase all materials, supplies or equipment required by the City subject to and pursuant to the directives and appropriations made and provided by Council and subject to such restrictions as provided by law pertaining to the creation of liabilities against the City and expenditures or appropriations by the City. Such purchases shall be subject to the following standards and guidelines:

(a) The Director of Purchasing shall, where possible, establish sets of standards and specifications to control all purchases by the City.

(b) Where public bidding is required by law or ordinance, or where such procedure will benefit the municipality, the Director of Purchasing shall prepare, or review and approve the specifications and notice to the bidders and shall see that any required notices are published.

(c) Where public bidding is not required by law or ordinance, the Director of Purchasing shall whenever possible and practical purchase materials, supplies or equipment after the solicitation of three (3) competitive bids and the contract for the purchase shall be granted to the lowest responsible bidding party. Such bids may be solicited by direct mail, by telephone or other reasonable means of communication, including advertisement or posting of notice at City Hall.

(d) The Director of Purchasing shall seek authority to make purchases in advance of needs of bulk amounts where such purchases will result in economy or improved efficiency.

(3) **Records - inventory**: The Director of Purchasing shall have the following additional responsibilities and duties:

(a) The Director of Purchasing shall verify that the materials, supplies and equipment purchased, are correct in number and amount and comply with the standards and specifications prescribed.

(b) The Director of Purchasing shall have custody and responsibility for materials, supplies and equipment purchased in advance of actual need and the Director shall deliver or release said materials, supplies or equipment to the officer, department or employee needing it at the time its use is required.

(c) The Director of Purchasing shall keep accurate and complete records of all purchases made and of the destination or ultimate use of such material, supplies or equipment and shall keep an inventory of all such municipal property.

ARTICLE III CITY FORESTER

Section 10.302 <u>Office created</u> --- There is hereby created the office of City Forester who shall be appointed by the Mayor, by and with the advice and consent of the Council.

10.302 <u>Duties - powers</u> --- It shall be the duty of the City Forester to see that all statutes and ordinances for the planting and protection of trees are strictly enforced; to direct the time and method of trimming all trees in the streets and public places of the city except when this duty is specifically assigned elsewhere and except in public parks under the control of the Quincy Park District, to consult with the City Council and property owners regarding the kind of trees and method of planting deemed desirable on particular streets; and to perform such other duties relating to his office as may be prescribed from time to time by the Council. Such Forester shall possess the powers of a patrolman or policeman in making arrests and serving process and shall be subject to removal by the Mayor at any time.

10.303 <u>Records</u> --- The City Forester shall keep a record of all of the transactions of his office and shall make an annual report to the Council concerning said transactions and shall make such further reports as may be requested by the Mayor or the City Council. The Forester shall give a bond in the sum of one thousand dollars ($1,000) for the faithful performance of his duties.

10.304 <u>Pruning trees</u> --- All cutting, trimming and pruning of trees shall be under the supervision of the City Forester.

10.305 (Reserved)

ARTICLE IV DEPARTMENT OF PLANNING AND DEVELOPMENT

Section 10.401 Creation --- There is hereby established and created an executive department which shall be known as the Department of Planning and Development (hereinafter called "Department"). Said department shall be under the direction and supervision of a Director of Planning and Department who shall be appointed by the Mayor, by and with the advice and consent of the City Council. The department shall consist of such other employees who shall be appointed by the Mayor as authorized by the City Council in its annual appropriation ordinance, including, but not limited to, a Director of Community Development, Director of Inspection and Enforcement, and Zoning Administrator.

10.402 Duties and responsibilities-Director --- The Director of Planning and Development shall have responsibility for the administration, coordination, supervision and direction of the Department of Planning and Development.

10.403 Authority and duties of department -- The Department shall have the following powers, duties and responsibilities for planning and development in the City.

(1) Maintenance of permanent and current; records of the zoning code and comprehensive plan, including, but not limited to, all maps, amendments and special uses, variations, appeals, and applications therefore.

(2) Receipt, filing and forwarding to the City Clerk of all applications for amendments to the zoning code or comprehensive plan, including applications for special uses and planned development.

(3) Review and investigation of any applications for:

(a) Amendments to the zoning code or comprehensive plan;

(b) Special use permits or amendments or modifications;

(c) Planned unit developments or amendments thereto;

(d) variances.

(4) Submission to the Plan Commission and City Council of recommendations regarding any applications for proposed amendments to the zoning code or comprehensive plan, including special uses and planned developments.

(5) Submission to the Zoning Board of Appeals and City Council of recommendations regarding and proposed variances as administered by the Zoning Board of Appeals.

(6) Initiation, direction and review, from time to time, of a study of the provisions of the comprehensive plan, and submission of reports to the Plan Commission and City Council regarding the status and effectiveness of the zoning code and comprehensive plan.

(7) Inspection of buildings, structures, and uses of land to determine compliance with the terms of the City's building, life safety and zoning codes and regulations.

(8) Maintenance of permanent and current records of all building and life safety including plumbing and electrical code, applications and permits.

(9) Development and promulgation of rules, regulations and procedures, subject to the approval of the City Council, regarding zoning, building and community or economic development administration or procedures.

(10) Promotion and encouragement of economic and community development, including but not limited to:

(a) Collection and maintenance of information and records regarding industrial, manufacturing, business and commercial opportunities and possibilities in the City, such as available and potential transportation facilities, utility resources, business and consumer markets, labors markets, industrial, commercial and residential resources and sites and recreational facilities.

(b) Encouragement and promotion of new industrial and commercial enterprises to locate within the City and/or region;

(c) Encouragement and promotion of the growth, expansion, retention of existing industrial and commercial enterprises in the City and the creation new employment and creation of existing jobs therefrom;

(d) Preparation, application and administration of any and all grants, loans, gifts for community and economic development.

(11) Provide assistance to the Quincy Preservation Commission in review and evaluation of place structures and districts for historic and/or landmark designation and other assistance for said Commission in the performance of its obligations and powers as provided in Article XIV of Chapter 11 of this Code.

(12) Coordination and promotion of building and zoning enforcement and planning in a manner consistent with historic and architectural preservation and public health, welfare and safety.

10.404 <u>Office of Inspection and Enforcement</u> --- The Director of Inspection and Enforcement (also to be known as the Building Inspector) shall supervise the operation of the Office of Inspection and Enforcement and shall have such other duties as assigned by the Director of Planning and Development. The Building Inspector shall supervise the activities of the other inspections, including the Inspector of Minimum Housing, Electrical Inspector and Plumbing Inspector. Such inspectors shall be appointee by the Mayor with the advice and consent of the City Council, unless, otherwise provided by statute or ordinance.

10.405 <u>Zoning Administrator</u> --- The Zoning Administrator shall be charged with maintenance of the district map and such other duties concerning the City's zoning plan as may be determined by the Director of Planning and Development. The Zoning Administrator shall be appointed by the Mayor with the advice and consent of the City Council, unless otherwise provided by statute or ordinance.

10.406 <u>Director of Community Development</u> ---. The Director of Community Development shall be charged with the operation of the Office of Community Development and such other, duties concerning community development as may be determined by the Director of Planning and Development. The Director of Community Development shall be appointed by the Mayor with the advice and consent of the City Council, unless otherwise provided by statute or ordinance.

ARTICLE V DEPARTMENT OF HUMAN RESOURCES

Section 10.501 <u>Establishment</u> --- There is hereby established and created an executive department to be known as the Department of Human Resources. Said department shall be under the direction and supervision of a Director of Human Resources who shall be employed by the Mayor, by and with the advice and consent of the City Council pursuant to contract for such term or period and upon such terms and conditions as shall be approved by the Mayor and Council. The department shall consist of such other employees who shall be appointed by the Mayor, as authorized by the City Council in its annual appropriation ordinance.

10.502 <u>Duties and responsibilities-Director</u> ---

(a) **Personnel duties**: The Human Resource Director shall have responsibility for the administration, coordination, supervision and direction of City personnel and employees and shall develop and direct a comprehensive program of personnel administration. Such program shall include recruitment, position classification, pay compensation and compensation review, benefit administration, performance evaluation and employee development. The Director shall participate in negotiation of collective bargaining agreements, as authorized and directed by the Mayor and City Council, and shall administer all collective bargaining contracts involving the City. The Director shall coordinate and process grievance and arbitration proceedings and advise the Mayor and Council regarding the same.

(b) **Risk management**: The Human Resource Director shall have responsibility for administration, coordination, supervision and direction of the City with regard to compliance with all state, federal and local regulations concerning employee safety, including, but not limited to loss prevention programs, and implementation and enforcement of such programs. The Director shall administer, coordinate, supervise and process the City's liability, workman's compensation, property damage and group health insurance transactions and functions.

(c) **Supervision**: The Human Resource Director shall report to and be subject to the supervision and direction of the Mayor and Director of Administrative Services.

(d) **Records**: The Human Resource Director shall develop, prepare and maintain such records, documents, policies as are necessary and required to implement and fulfill the duties, responsibilities and obligations of the Department.

CHAPTER 11

BOARDS AND COMMISSIONS

ARTICLE I	**BOARD OF LOCAL IMPROVEMENTS**
ARTICLE II	**LIBRARY BOARD**
ARTICLE III	**POLICE PENSION BOARD**
ARTICLE IV	**FIREMEN'S PENSION BOARD**
ARTICLE V	**PLAN COMMISSION**
ARTICLE VI	**FIRE AND POLICE COMMISSION**
ARTICLE VII	**ZONING BOARD OF APPEALS**
ARTICLE VIII	**TRAFFIC COMMISSION**
ARTICLE IX	**COMMISSION ON EQUAL OPPORTUNITIES**
ARTICLE X	**TRANSIT ADVISORY COMMISSION**
ARTICLE XI	**(RESERVED)**
ARTICLE XII	**QUINCY CITY TREE BOARD**
ARTICLE XIII	**BUSINESS DISTRICT DEVELOPMENT AND REDEVELOPMENT COMMISSION**
ARTICLE XIV	**QUINCY PRESERVATION COMMISSION**
ARTICLE XV	**QUINCY AND ADAMS COUNTY 9-1-1 COMMUNICATIONS SYSTEMS GOVERNING BOARD**
ARTICLE XVI	**QUINCY ECONOMIC DEVELOPMENT LOAN COMMITTEE**
ARTICLE XVII	**ELECTRICAL COMMISSION**
ARTICLE XVIII	**BUILDING COMMISSION**
ARTICLE XIX	**SISTER CITY COMMISSION**
ARTICLE XX	**FOREIGN FIRE INSURANCE BOARD**

ARTICLE I BOARD OF LOCAL IMPROVEMENTS

Section 11.101 Establishment -- There is hereby established the Board of Local Improvements, which shall consist of the Mayor who shall be president of said board, the City Engineer and the Superintendent of Streets. Such board is especially charged with performing all the duties relating to local improvements to be paid wholly or in part by special assessments or special taxation, in the manner provided by statute.

11.102 Meetings --- The Mayor shall call a meeting of the Board of Local Improvements at such times as a majority of the board may decide or at such times as the public interest or the statutes demand.

11.103 Other duties -- The Board of Local Improvements shall make recommendations to the City Council on matters relating to streets, alleys, sidewalks and public places and otherwise perform such acts in relation to streets, alleys, sidewalks and other public places the City Council shall from time to time request.

ARTICLE II LIBRARY BOARD

Section 11.201 <u>Public Library created</u> --- There is hereby created and shall hereafter be maintained and recognized as a governmental department of the city, a public library and reading room for the use and benefit of the inhabitants of the city and which shall be forever free to the use of such inhabitants, always subject to such reasonable rules and regulations as the Board of Directors of such library may adopt.

11.202 <u>Board of Directors</u> --- The affairs of such library shall be managed and controlled by a board of nine directors who shall be appointed by the Mayor, by and with the advice and consent of the Council, and who shall be chosen from the citizens at large with reference to their fitness for such office; at least three of said directors shall be women and not more than one member of the City Council shall, at any one time be a member of said board.

11.203 <u>Term of office</u> --- Their term of office shall be for three years from the first of July following their appointment; and annually thereafter the Mayor shall, by and with the advice and consent of the Council, before the first of July of each year, appoint three directors to take the place of the retiring directors, who shall hold office for three years, or until their successors are appointed. The Mayor may, by and with the advice and consent of the Council, remove any director for misconduct or neglect of duty.

11.204 <u>Vacancies - how filled</u> --- Vacancies in the Board of Directors shall be reported to the Council and shall be filled in like manner as original appointments, and no director shall receive any compensation as such.

11.205 <u>Meetings and organization of Board</u> -- Such directors shall elect one of their number president and such other officers as they may deem necessary. They shall make and adopt such by-laws, rules and regulations for their own guidance and for the government of the library and reading room as may be expedient and not inconsistent with the provisions of this article. They shall have the exclusive control of the expenditure of all moneys collected to the credit of the library fund and of the supervision, care and custody of the grounds, room or buildings constructed, leased or set apart for library purposes. Said Board shall appoint a suitable librarian and necessary assistants and fix their compensation and shall also have power to remove such appointees; and shall, in general, carry out the spirit and intent of this article in establishing and maintaining a public library and reading room of the greatest benefit to the greatest number; and said Board may exclude from the use of said library and reading room any and all persons who shall willfully violate such rules. The Board may extend the privileges and use of such library to persons residing out of the city upon such terms and conditions as said Board may from time to time by its regulations prescribe.

11.206 <u>Report to Council</u> --- The Board of Directors shall make, on or before the second Monday of June, an annual report to the Council stating the condition of their trust on the first day of June of that year, the various sums of money received from the library fund and from other sources and how such moneys have been expended and for what purposes; the number of volumes at the beginning of the year, the number of volumes added, the number of volumes withdrawn, and the total number of volumes at the end of the year in the juvenile and adult departments together with complete totals; the number of periodicals received through

subscription; the number of volumes lent for home use in the juvenile and adult departments together with complete totals; the number of persons registered as borrowers; and such other information and suggestions as they deem of general interest. All such portions of said report as related to the receipt and expenditure of money, as well as the number of books on hand, books lost or missing, and books purchased, shall be verified by affidavit.

11.207 Care of books --- Any person who shall carry away without authority, willfully or maliciously cut, write upon, injure, deface, tear or destroy any book, periodical, newspaper, plate, film, recording, engraving or other property belonging to the city and constituting a part of the property devoted to the use of the public library, shall be subject to a fine as provided for in Chapter 32.

11.208 Unlawful retention of library materials --- It shall be unlawful for any person to borrow library material from the public library, pursuant to any agreement with the procedure established by the library for the return of such library material, and fail to return the library materials so borrowed in accordance with such agreement or procedure within 10 days of receiving written notice by personal delivery or registered mail from the library demanding the return of such library, materials.

As used herein, library materials includes any book, plate, picture, photograph, engraving, painting, scripture, statute, artifact, drawing, map, newspaper, pamphlet., broadside, magazine, manuscript, document, letter, toy, microphone, sound recording, audio visual material, magnetic or other tape, electronic data processing record or other documentary, written or printed material regardless of physical form or characteristics, or any part thereof, belonging to or on loan to or otherwise in the custody of the public library. In addition to such other relief as the law may afford, any person, firm or corporation violating the provisions of this section shall be punishable as set forth in Chapter 32 of this Code.

ARTICLE III POLICE PENSION BOARD

Section 11.301 **Creation** --- There shall be a Police Pension Board consisting of five members. Of these members two shall be appointed by the Mayor, with the consent of the Council, serving a term of two years each; two shall be elected from the regular police force of the city, and one shall be elected from the beneficiaries of the pension. Each member shall serve for two years and elected members shall be selected in the manner provided by law.

11.302 **Duties** --- It shall be the duty of the members of the police pension board to manage, invest and control the police pension fund and all moneys pertaining thereto in the manner provided by statute.

ARTICLE IV FIREMEN'S PENSION BOARD

Section 11.401 **Creation** --- There shall be a Board of Trustees of the Fire Pension Fund which shall consist of the Fire Chief, the Mayor, the City Treasurer, the City Clerk and three other persons who shall be chosen from the active firemen of the city and one other person who shall be chosen from the retired firemen as provided by statute. The members of the board selected from the active and retired firemen shall be elected at the time and in the manner provided by statute.

11.402 **Duties** --- The Board of Trustees of the Firemen's Pension Fund shall have control of the management of all funds belonging to or designated by law as part of the firemen's pension fund and of the administration of such funds as provided by statute.

ARTICLE V PLAN COMMISSION

Section 11.501 <u>Establishment of the Quincy Plan Commission</u> ---

(1) **Creation**: There is hereby created the Quincy Plan Commission, which shall have the powers and perform the duties hereinafter provided.

(2) **Membership**: The Quincy Plan Commission shall consist of seventeen (17) members of which thirteen (13) shall have the power to vote and four (4) shall not have the power to vote. One (1) such member, with the power to vote, shall be the Mayor or a City Official designated by the Mayor and certified in writing to the Secretary of the Quincy Plan Commission. Six (6) such members, with the power to vote, to be known as "representative members", shall respectively be appointed by the City Council, the Adams County Board of Supervisors, the Board of Commissioners of the Quincy Park District, the Adams County Board of Health, the Board of Education of Community Unit School District No. 172 of Adams County, and the Board of Commissioners of the Quincy Housing Authority, and certified in writing to the Secretary of the Quincy Plan Commission. Representative members may, but need not be, be members of the respective boards of public bodies appointing them. The remaining six (6) voting members, to be known as "at-large members", shall be appointed by the Mayor and confirmed by the City Council, provided that at least one (1) such member shall reside outside the corporate limits of the city but within one and one-half (1 1/2) miles thereof. The four (4) members, without the power to vote, to be known as "Ex-Officio Members", shall be City Officials serving Ex-Officio, namely the City Engineer, the Corporation Counsel, the Building Inspector, and the Director of Department of Planning and Development. Any such Ex-Officio member may designate in writing to the Secretary of the Plan Commission, subject to the approval of the Mayor, that another City Official shall serve as an Ex-0fficio member on such member's behalf.

(3) **Terms of office**: The Mayor and the Ex-Officio Members of the Quincy Plan Commission shall serve for the term of their respective municipal offices. Representative members of the Plan Commission shall, respectively, serve at the pleasure of the individual board or public body appointing such member. At-large members of the Quincy Plan Commission shall serve at the pleasure of the Mayor, provided, that no such member shall serve for more than six (6) years, consecutive or otherwise, and provided further, that any such member nominated by the Quincy Plan Commission and confirmed by the City Council pursuant to Section 11.501(4) shall serve a minimum of one (1) year.

(4) **Vacancies**: Vacancies on the Quincy Plan Commission on account of an Ex-Officio Member shall be filled upon the appointment of a successor to such City Official. In the event that such City Official is not appointed and confirmed within thirty (30) days of the vacancy, the Quincy Plan Commission may designate an appropriate City Official to serve as an Ex-Officio Member until such succeeding City Official is appointed and confirmed. Vacancies on the Quincy Plan Commission on account of a representative member shall be filled upon appointment by the appropriate board or public body of a successor to fill such vacancy. In the event that a board of public body shall fail to appoint a member to fill such vacancy within thirty (30) days of such vacancy, the Quincy Plan Commission may designate a representative member for such board or public body until the vacancy is filled. Vacancies on the Quincy Plan Commission on account of at-large members shall be filled within thirty (30) days of such vacancy by appointment of the Mayor and confirmation by the City Council. In the event that the Mayor shall fail to appoint a member within such thirty (30) days period, the Quincy Plan Commission shall nominate an individual to fill the vacancy, subject to confirmation by the City Council, who if so confirmed, shall serve a minimum of one (1) year, after which time much

member shall serve at the pleasure of the Mayor. In the event that the Mayor shall nominate a member within such thirty (30) day period, but such appointment is not confirmed by the City Council within such period, the Quincy Plan Commission may appoint an At-Large Member to fill such vacancy until a successor is duly appointed and confirmed.

(5) **Compensation**: Members of the Quincy Plan Commission shall serve without compensation but shall be reimbursed for their reasonable expenses incurred in connection with their service as members.

11.502 <u>Organization and procedures of the Quincy Plan Commission</u> ---

(1) **Officers**: The Quincy Plan Commission at its first meeting of each year shall elect a chairman, a vice-chairman, a secretary and such other officers as it may deem appropriate. All such officers shall be members of the Quincy Plan Commission excepting that the secretary need not be a member and may be its technical-secretary. The vice-chairman shall have authority to act as chairman during the absence or disability of the chairman. If the chairman and the vice-chairman are absent or otherwise unable or refuse to perform their duties, a chairman pro tempore shall be appointed by the Quincy Plan Commission from among their number. The secretary shall perform the duties usually pertaining to such office. If the secretary shall be absent from any meeting or refuses to perform such secretary's duties, a member of the Quincy Plan Commission shall be appointed secretary pro tempore.

(2) **Quorum**: Seven (7) voting members of the Quincy Plan Commission shall constitute a quorum; provided however, that if any vacancies exist as to such voting members a simple majority of voting members then serving shall constitute a quorum.

(3) **Voting**: A majority of the members voting on any measure shall determine the outcome thereof. Any member of the Quincy Plan Commission who shall have a direct or indirect interest in any property or in a decision relating to such property, which shall be the subject matter of, or affected by, a decision of the Quincy Plan Commission, shall be disqualified from participating in the discussion, decision or proceedings of the Quincy Plan Commission in connection therewith.

(4) **Bylaws and procedures**: Consistent herewith, ordinances of the city and laws of the State of Illinois, the Quincy Plan Commission shall adopt such bylaws and establish such procedures regulating the time, place and manner of holding its meetings and the conduct of it business as may, in the judgment of the Quincy Plan Commission, be proper and necessary in carrying on its work.

(5) **Records and reports**: The Quincy Plan Commission shall keep a written record of its proceedings, which shall be open at all reasonable times to public inspection, and shall also file an annual report with the City Council setting forth its transactions and recommendations. In all instances, the Quincy Plan Commission shall report directly to the City Council.

(6) **Staff**: The staff of the Quincy Plan Commission shall consist of a technical-secretary and such other staff as may be authorized by the City Council. The technical-secretary shall be an advisor to the Quincy Plan Commission, custodian of its records, shall conduct official correspondence and generally supervise the clerical and technical work of the Quincy Plan Commission. Such technical-secretary shall be appointed by the Quincy Plan Commission and shall devote his or her entire time to the duties of such office. The salary of the technical-secretary and the employment of other staff shall be determined and fixed by the City Council. No member of the staff shall be a member of the Quincy Plan Commission, excepting that the technical-secretary may also serve as secretary of said commission.

11.503 <u>Duties and powers of the Quincy Plan Commission</u> ---

(1) To prepare and recommend to the Mayor and City Council a comprehensive plan for the present and future development or redevelopment of the city. Such plan may be adopted in whole or in separate geographical or functional parts, each of which, when adopted, shall be the official comprehensive plan, or part thereof, of the city. This plan may include reasonable requirements with reference to streets, alleys, public grounds, and other improvements hereinafter specified. The plan, as recommended by the Plan Commission and as thereafter adopted shall be applicable, to land situated within the corporate limits and contiguous territory not more than one and one-half (1 1/2) miles beyond the corporate limits. Such plan may be implemented by ordinances.

(a) Establishing reasonable standards of design for subdivisions and for re-subdivisions of unimproved lands and of areas subject to redevelopment in respect to public improvements as herein defined.

(b) Establishing reasonable requirements governing the location, width, course, and surfacing of public streets and highways, alleys, ways for public service facilities, curbs, gutters, sidewalks, street lights, parks, playgrounds, school grounds, size of lots to be used for residential purposes, storm water drainage, water supply and distribution, sanitary sewers, and sewage collection and treatment; and

(c) May designate land suitable for annexation to the city and the recommended zoning classification for such land upon annexation.

(2) To recommend changes, from time to time, in the official comprehensive plan.

(3) To prepare and recommend to the Mayor and City Council, from time to time, plans for specific improvements in pursuance of the official comprehensive plan.

(4) To give aid to the City Officials charged with the direction of projects for improvements embraced within the official plan, to further the making of these projects, and generally, to promote the realization of the official comprehensive plan.

(5) To review all plans for subdivision or re-subdivision of land within the corporate limits of the city or in contiguous territory outside of and distant not more than one and one-half (1 1/2) miles therefrom, and to make recommendations regarding the same to the City Council.

(6) To conduct public hearings regarding amendments of the zoning ordinance of the City of Quincy, changes in zoning classification as to specific parcels of land, special uses, and planned developments, and to make recommendations regarding the same to the City Council.

(7) To exercise such other powers and duties germane to the powers and duties granted herein as may be conferred by the City Council.

(8) To make recommendations to the City Council concerning classification of commercial or industrial uses not specifically listed in the zoning ordinance as to the appropriate districts therefore, based on the general character of the use and its comparability with other uses specifically permitted in the district.

ARTICLE VI BOARD OF FIRE & POLICE COMMISSIONERS

Section 11.601 <u>Creation</u> --- That there is hereby established in the City of Quincy, Illinois a Board of Fire and Police Commissioners which shall consist of three members of the municipality to be appointed by the Mayor by and with the consent of the City Council. Each member of said board shall be appointed for a period of three years and until their respective successors are appointed and have qualified. No such appointments, however, shall be made by the Mayor within thirty days before the expiration of his term of office.

11.602 <u>First appointments</u> --- Within thirty days after this ordinance becomes effective, the Mayor shall appoint the first members of the board. One of the members shall be appointed to serve until the end of the then current municipal year next ensuing and the third to serve until the end of the municipal year second next ensuing. But every member shall serve until his successor is appointed and has qualified. Vacancies on the Board of Fire and Police Commissioners shall be filled in the same manner as the original appointment. The board members shall elect a chairman to serve during the municipal fiscal year. A majority of the board constitutes a quorum for the conduct of all business.

11.603 <u>Qualifications - removal</u> --- The members of the board shall be considered officers of the municipality. No person holding a lucrative office under the United States, this state or any political subdivision thereof, or a municipality, shall be a member of the Board of Fire and Police Commissioners or the secretary thereof. The acceptance of any such lucrative office by a member of the board shall be treated as a resignation of his office as a member of the board or the secretary thereof. No person shall be appointed a member of the Board of Fire and Police Commissioners who is related, either by blood or marriage up to the degree of first cousin, to any elected official of such municipality. No more than two members of the board shall belong to the same political party existing in such municipality at the time of such appointments and as defined in Section 10-2 of the Election Code. Party affiliation shall be determined by affidavit of the person appointed as a member of the board.

Members (including the Fire and Police Chiefs during the term of their respective appointments as otherwise provided in this code) shall not be subject to removal, except for cause, upon written charges and after an opportunity to be heard to his, or her, own defense as hereinafter provided in this code. A majority vote of the elected members of such governing body shall be required to remove any such member from office.

11.604 <u>Fire and Police Department - appointment - promotion of members</u> ---

(1) **Generally**: The Board of Fire and Police Commissioners shall appoint all officers and members of the Fire and Police Departments of the municipality including the Chief of Police and the Chief of the Fire Department, unless the City Council shall by ordinance as to them otherwise provide.

The appointment of the Fire Chief and Police Chief shall be subject to the limitations and restrictions otherwise provided in this case including specifically but not limited to, those limitations and provisions contained in Chapters 8 and 9 hereof.

(2) **Probation**: All initial appointments to the lowest rank of firefighter shall be subject to a period of probation not exceeding one year. All other appointments, including original and promotional (including the Fire and Police Chief) shall be subject to a period of probation for such term as the Board of Fire and Police Commissioners shall, by rule, determine not exceeding

eighteen (18) months from the date of the appointment or promotion. The Board shall have authority during any such probationary period to discharge or demote the probationary appointee without assigning cause or without a hearing. The Board of Fire and Police Commissioners, may for good cause, extend the period of probation of an appointment, an additional period not exceeding six (6) months from the expiration of the original period of probation. Good cause may include, but is not limited to, the failure of the probationary employee to serve a sufficient period of active duty during the period of probation, to permit the board to evaluate the appointee's competence and qualification to perform the duties required of the appointed position. Nothing herein shall be construed nor shall it effect any salary or other benefits to which a firefighter or policeman, appointed before the effective date of this ordinance, would otherwise be entitled under any collective bargaining or other agreement between the employee and the city.

(3) **Fire Department - EMT automated defibrillator certification**: Members appointed to the Fire Department, as provided herein, shall within 12 months of their appointment, obtain and maintain certification or a license as an emergency medical technician - basic (herein "EMT-B") with the Illinois Department of Public Health and shall further complete any training, education or certification required by the Illinois Department of Public Health to utilize and operate an automated defibrillator (herein "AD Certification"). Failure to obtain said EMT-B license or said AD Certification within said time, or failure to maintain the same shall constitute cause for removal from the department. Nothing herein shall be construed nor shall it effect any salary or other benefits to which a firefighter, appointed before the effective date of this ordinance, would otherwise be entitled under any collective bargaining or other agreement between the employee and the city.

(4) **Miscellaneous**: If a member of the department is appointed Chief of Police or Chief of the Fire Department prior to being eligible to retire on pension he shall be considered as on furlough from the rank held immediately prior to this appointment as chief, if his term terminates, or he resigns as chief or is discharged as chief prior to attaining eligibility to retire on pension, he shall revert to and be established in such prior rank, and thereafter be entitled to all the benefits and emoluments of such prior rank without regard as to whether a vacancy then exits in such rank.

(a) **Term of appointment**: The appointment of the Fire Chief and Police Chief shall be subject to the limitations and restrictions otherwise provided in this code, including specifically, but not limited to, those limitations and provision, contained in Chapters 8 and 9 hereof.

(b) **Annual evaluation**: The Commission shall conduct annual evaluations of the Fire and Police Chiefs. Such evaluations may include assessment and evaluation of the respective chiefs' leadership, planning, organizational and administrative abilities, judgment and problem solving abilities, oral and written communication skills, attitude, skill in development of subordinate employees, relationship with subordinate employees, administration and the public, as well such other matters which the Board may determine to be of assistance in evaluating the performance of the chiefs. The Commission shall report the results of such evaluations to the respective chiefs and the City Council.

(4) **Promotion - rank**: Except as otherwise provided for the Fire and Police Chiefs, all appointments to each department other than that of the lowest rank, however, shall be from the rank next below that to which the appointment is made, except when there are less than three applicants for the appointment. In such case, applicants may be taken from the second rank next below that to which, no appointment is made. The Chief of Police and the Chief of the Fire

Department may be appointed from among members of the Police and Fire Departments, respectively, regardless of rank, unless the Council shall have by ordinance as to them otherwise provided. Notwithstanding any other rule or regulation of the Commission or otherwise, a member who has not completed a promotional probationary appointment shall likewise be eligible for appointment to the position of Police or Fire Chief respectively.

(5) **Certificate of appointment**: The sole authority to issue certificates of appointment shall be vested in the Board of Fire and Police Commissioners and all certificates of appointments issued to any officer or member of the Fire or Police Department of a municipality shall be signed by the chairman and secretary respectively of the Board of Fire and Police Commissioners of such municipality, upon appointment of such officer or members of the Fire and Police Department of such municipality by action of the Board of Fire and Police Commissioners.

(6) **Auxiliary Policemen**: The term "policemen" as used in this ordinance does not include Auxiliary Policemen as provided for by statute.

(7) **City Officers**: Any full time member of the regular Fire or Police Department of the city, is a City Officer, under the provisions of this code.

11.605 <u>Duties</u> --- The Board shall make rules (1) to carry out the purpose of this ordinance, and (2) for appointments and removals in accordance with the provisions of this ordinance. The Board, from time to time, may make changes in these rules.

All these rules and changes therein shall be printed immediately for distribution. The Board shall give notice (1) of the places where the printed rules may be obtained, and (2) of the date, not less then ten days subsequent to the time of publication, when the rules or changes therein shall go into operation. This notice shall be published in one or more newspapers published in the municipality or, if no newspaper is published therein, then in one or more newspapers with a general circulation within the municipality.

The rules of the Board shall apply only to the conduct of examinations for original appointments, for promotions, and to the conduct of hearings on charges brought against a member of the Police or Fire Department. Where any rule is in conflict with this ordinance, this ordinance shall supercede this rule. In the absence of a rule of the Board, the provisions of this ordinance shall govern the method of appointments, period of probation, removals or discipline. The Council may also rescind rules of the Commission but can do so only by ordinance.

11.606 <u>Examination of applicants</u> --- The Board of Fire and Police Commissioners shall conduct such examinations for appointment to the Fire and Police Departments as required from time to time to maintain a register of eligibles as hereinafter provided. The Board shall have authority, as it determines, to utilize the services of the Illinois Department of Employment Security for purposes of advertising and processing applications for such examinations. Except for applicants who have successfully attended and graduated from an accredited Illinois Police corps program administered through the Illinois Law Enforcement Training and Standards Board, all testing and evaluation of eligible applicants shall be performed by the Board of Fire and Police Commissioners. Graduates of an IPC program shall be subject to such oral interviews or evaluations, including psychological and background evaluation, as the Board of Fire and Police Commissioners determine. All applicants for a position in either the Fire or Police Department of the municipality shall be not less than twenty and one-half years of age nor more than thirty-four years of age, shall be subject to an examination which shall be public, competitive, and free to all applicants, except subject to reasonable limitations as to residence, habits and moral

character, which limitations may be adopted by rules of the Board, except that no person shall commence service until he or she, is at least twenty-one years of age. The foregoing age limitation does not apply to any person previously employed as a full time policeman or fireman in a regularly constituted Police or Fire Department of any municipality for a period of at least one year. Any full time member of a regular Fire Department of a Fire Protection District which was discontinued and whose obligations were assumed by a municipality under Section 21 of "An Act in Relation to Fire Protection Districts", who has served at least one year as a full time member of such department shall become a member of the classified service of the Fire Department in the municipality in the position held by him at the time of such discontinuance, without examination and age imitation. The Council may by ordinance provide that persons residing outside the municipality are eligible to take the examination. The examination shall be practical in character and relate to those matters which will fairly test the capacity of the persons examined to discharge the duties of the positions to which they seek appointment. No person shall be appointed to the Police or Fire Department if he or she does not possess a high school diploma or an equivalent high school education. Persons who have successfully obtained an associate's degree, or an academic equivalent or greater Degree from an accredited college or university may be preferred by this Commission in the establishment of the register of eligible applicants (Section 11.607) or in appointment from the register of eligibles. Nothing herein shall be construed to limit or restrict the Commission's discretion to appoint from among the three (3) highest ranking applicants as otherwise provided or allowed by the rules of the Commission or this ordinance. The examinations shall include tests of physical qualifications and health. No applicant shall be examined concerning his political or religious opinion or affiliations. The examinations shall be conducted by the Board of Fire and Police Commissioners of the municipality. No person who is classified by his local selective service draft board as a conscientious objector, or who has ever been so classified, may be appointed to the Police Department.

No person shall be appointed to the Police or Fire Department unless he is a person of good character. "Good character" as used herein shall mean a person whose character is free of traits or habits which would prevent, impede or inhabit the satisfactory performance of the duties, responsibilities and tasks of the position, including, by way of example, but not limited to, a gambler or a person who has been convicted of a felony or a crime involving moral turpitude. Any such person who is in the department may be removed on charges brought and after a trial as hereinafter provided. However, anyone arrested for any cause but not convicted thereon shall not be disqualified from taking the examination to qualify for a position on the Police Department or Fire Department on grounds or habits of moral character.

11.607 <u>Register of eligibles</u> ---

(1) **Generally**: The Board of Fire and Police Commissioners shall prepare and keep a register of persons whose general average standing, upon examination, is not less than the minimum fixed by the rules of the Board and who are otherwise eligible. These persons shall take rank upon the register as candidates in the order of their relative excellence as determined by examination, without reference to priority of time of examination.

(2) **Illinois Police Corps Graduates:** Notwithstanding any other provision to the contrary, the Commission shall maintain a separate list or register of applicants who have successfully completed and graduated from an Illinois Police Corps (IPC) program, as described in Section 11.606.

(3) **Appointment:**

(a) **Police:** The Commission may appoint officers to the Police Department from: (i) among the three (3) highest ranking applicants from the general register established from the examinations conducted by the Commission (Section 11.602(1)); or (ii) from the list of IPC applicants as provided in Section 11.607(2).

(b) **Fire:** The Commission shall appoint officers to the Fire Department from among the three (3) highest ranking applicants from the register established pursuant to Section 11.607(1).

(c) **Physical Exam:** All appointments shall be subject to a final physical exam.

(d) **Striking Names:** The Board shall strike off the names of candidates for original appointment (from either list, as provided above) after such names have been on the list for more than two (2) years for the Fire Department and for more than one (1) year for the Police Department. Appointment shall be subject to a final physical examination.

If a person is placed on an eligibility list and becomes overage before the person is appointed to a Police or Fire Department, he or she remains eligible for appointment until removed from the list as provided above, that is, after his or her name has been on the list for two (2) years for the Fire Department and one (1) year for the Police Department. Otherwise, no person who has attained the age of thirty-five (35) years shall be inducted as a member of the Fire or Police Department, except as also otherwise provided in this Article. If a person is overage when his or her name is stricken, the person may not thereafter be appointed or added to such list.

11.608 <u>Promotions - merit - seniority</u> ---

(1) **Generally**: The Board, by its rules, shall provide for promotion in the Fire and Police Departments on the basis of ascertained merit and seniority in service and examination, and shall provide in all cases, where it is practicable, that vacancies shall be filled by promotion. All examinations for promotion shall be competitive among such members of the next lower rank as desire to submit themselves to examination, except when there are less than three applicants for appointment, and further except that the Chief of Police and the Chief of the Fire Department may be appointed from among members of the Police and Fire Departments, respectively, regardless of rank, unless the Council shall have by ordinance as to them otherwise provided. Notwithstanding any other rule or regulation of the Commission or otherwise, a member who has not completed a promotional probationary appointment shall likewise be eligible for appointment to the position of Police or Fire Chief respectively.

The Board in determining next in order of rank in promotional examination may determine a policy of extending the examination to all ranks of the Fire and Police Departments in an endeavor to qualify suitable eligibles before extending the examinations to any person having the necessary qualifications.

All promotions shall be made from the three having the highest rating, and where there are less than three names on the promotional eligible register, appointment may be made from those names remaining. The method of examination and the rules governing examinations for promotion shall be the same as provided for applicants for original appointment. The Board shall strike off the names of candidates for promotional appointment after they have remained thereon for more than two years provided there is no vacancy existing which can be filled from the promotional register.

(2) **Promotional preferences**:

(a) **Educational preferences**: The Board shall have the power and the authority to allow promotional preferences to members of the Fire and Police Department who have obtained or acquired educational degrees beyond a high school or equivalent degree as specified below.

(b) **Educational credit**: If the Board elects to give educational preferences as provided in subsection (a) above, it shall designate and provide notice to candidates of the points which shall be added to the candidates grade average, but in no event shall the total educational preference points allowable exceed 4.

11.609 <u>Notice of examination</u> --- Notice of the time and place of every examination shall be given by the Board by a publication at least two weeks preceding the examination, in one or more newspapers published in the municipality, or, if no newspaper is published therein, then in one or more newspapers with a general circulation within the municipality, except on promotional examinations. Notice may be given by posting on department bulletin boards at least two weeks preceding examination.

11.610 <u>Temporary appointments</u> --- In order to prevent a stoppage of public business, to meet extraordinary exigencies, or to prevent material impairment of either the Police or Fire Department, the Board may make temporary appointments to remain in force until regular appointments may be made under the provision, of this ordinance, but never to exceed sixty days. No temporary appointment of any one person shall be made more than twice in any calendar year.

11.611 <u>Removal or discharge - hearing or charges - retirement</u> --- Except as hereinafter provided, officers or members of the Fire and Police Department (including the Fire and Police Chiefs, during the term of their respective appointments as otherwise provided in this Code), who shall have successfully served and completed their probationary period, as provided herein shall not be subject to removal or discharge, except for cause, upon written charges, filed by the Board of Fire and Police Commissioners, and after an opportunity to be heard in his or her own defense. The Board of Fire and Police Commissioners shall conduct a fair and impartial hearing of the charges to be commenced within thirty (30) days of the filing thereof, which hearing may be continued from time to time. Nothing herein shall be deemed to limit or restrict the power and authority of the Board, in accordance with its rules, to conduct informal investigations of complaints or allegations of misconduct of members of the Fire or Police Departments. Charge or charges as used herein, shall be deemed to be filed only after the Board files and serves on the member formal, written notice of charges in accordance with the rules of the Board, and after such informal investigation of a complaint or allegation as the Board, in its discretion may conduct. In case an officer or member is found guilty, the Board may discharge him or may suspend him not exceeding thirty (30) calendar days without pay. The Board may suspend any officer or member pending the hearing with or without pay, but not exceeding thirty, (30) days, and successive temporary suspensions may be made by the Board without pay for such period in the event the hearing is continued from time to time. If the Board of Fire and Police Commissioners determine that the charges are not sustained, the officer or member shall be reimbursed for all wages withheld, if any. In the conduct of this hearing, each member of the Board shall have power to administer oaths and affirmations, and the Board shall have power to secure by its subpoena both the attendance and testimony of witnesses and the production of books and papers relevant to the hearing.

The age for retirement of policemen and firemen is sixty-five (65) years including Chief of the Police Department and Fire Department, unless the Council shall by ordinance provide for an earlier retirement age of not less than sixty (60) years.

Nothing in this section shall be construed to prevent the Chief of the Fire Department or the Chief of the Police Department from suspending without pay a member of his department for a period of not more than five (5) days, but he shall notify the Board in writing of such suspension. Any policeman or fireman so suspended may appeal to the Board of Fire and Police Commissioners for a review of the suspension within twenty-four (24) hours after, such suspension, and upon such appeal, the Board may sustain the action of the chief of the department, may reverse it with instructions that the man receive his pay for the period involved, or may suspend the officer for any additional period of not more thirty (30) days or discharge him, depending upon the facts presented. Upon such appeal a hearing de novo shall be held in the same manner as required in the case of charges originally having been filed against such officer.

11.612 <u>Contempt proceedings - failure to respond to subpoena</u> -- That any person, firm or corporation shall fail or neglect to appear in answer to a subpoena issued and served pursuant to the provisions of this ordinance and shall have been paid the statutory witness fee as provided by law in the case of subpoenas issued by a court of record, the fact of such failure to appear shall be certified to the Circuit Court of the county in which the hearing is held by the Board by petition filed in the Circuit Court in behalf of said Board certifying the facts concerning said matter and said court shall pass upon said matter as in cases of failure to abide by the provisions of a subpoena served in such court of record and shall enter such order either requiring said witness or witnesses to appear at a date certain to be fixed by the court, and in default thereof that said person, firm or corporation shall be subject to such penalties for contempt of court as to the court shall seem just and reasonable.

11.613 <u>Contempt before board</u> --- That if and in the event at a hearing conducted by the Board pursuant to the provisions of this ordinance that any person shall be guilty of such conduct during the course of said hearing as shall be equivalent to contempt of court, whether civil or criminal, the matter shall is certified to the Circuit Court of the county in which the hearing is held by the Board by petition filed in the Circuit Court in behalf of said board certifying the facts concerning said matter, and said court shall pass upon said matter as in cases of contempt before said Circuit Court, direct, indirect, or criminal and such court shall enter such order pertaining to such contempt as the facts shall disclose, and shall subject such person, if found guilty of such contempt, to such penalty as to the court shall seem just and reasonable.

11.614 <u>Fire or Police Departments - reduction of force reinstatement</u> --- When the force of the Fire Department or of the Police Department is reduced. and positions displaced or abolished, seniority shall prevail and the officers and members so reduced in rank, or removal from the service of the Fire Department or of the Police Department shall be considered furloughed without pay.

If any positions which have been vacated because of reduction in forces or displacement and abolition of positions, are reinstated, such members and officers of the Fire Department or of the Police Department as are furloughed from the said positions shall be notified by the Board by registered mail of such reinstatement of positions and shall have prior right to such positions if otherwise qualified and in all cases seniority shall prevail. Written application for such reinstated position must be made by the furloughed person within thirty days after notification as above

provided and such person may be required to submit to examination by physicians of the Board of Fire and Police Commissioners to determine his physical fitness.

11.615 <u>Annual report - budget request</u> --- Annually at any time the corporate authorities may provide, the Board of Fire and Police Commissioners shall submit to the Mayor a report of its activities, and of the rules in force and the practical effect thereof. In this report the Board may make suggestions, which the Board believes would result in greater efficiency in the Fire or Police Department. The Board shall also submit an annual budget request to the city prior to the end of each fiscal year. The Mayor shall transmit the report to the City Council.

11.616 <u>Secretary of board - duties</u> --- The Board may employ a secretary or may designate one of its own members to act as secretary. The secretary (1) shall keep the minutes of the Board's proceedings, (2) shall be the custodian of all records pertaining to the business of the Board, (3) shall keep a record of all examinations held, (4) shall perform all other duties the Board prescribes.

11.617 <u>Rooms and funds for operation of Board</u> --- The city shall provide suitable rooms for the Board of Fire and Police Commissioners, and shall allow reasonable use of public buildings for holding examinations by the Board and shall further provide adequate funds in the annual appropriation ordinance for the toleration of the Board.

11.618 <u>Compensation of secretary and board members</u> --- The secretary may be paid a reasonable compensation for his services to be fixed by the corporate authorities. The corporate authorities may also fix the compensation to be paid to the members of this board.

11.619 <u>Disability, military or other leave</u> ---

(1) **Grant of leave**: A person holding a position in the Fire or Police Department who is injured while in the performance of his or her duties and because of such injury is temporarily unable to continue to perform his or her duties shall, or for any other valid reason approved by the Board, upon written application to the Board, be granted a leave not to exceed a period of one (1) year. Additionally, a person holding a position in the Fire or Police Department who enters military or naval service of the United States because of a war in which the United States 's a party belligerent or as required by an Act of Congress shall, upon written application to the Board, be granted a military leave.

(2) **Return to active duty**: A person who has been on disability, military or other leave granted by the Board and who wishes to return to active duty in his or her certified position shall be credited with seniority for the period of such leave and, if otherwise qualified, shall be reinstated to his or her certified position at the rank or grace held at the start of the leave, not more than sixty (60) days after his or her written request for reinstatement is filed with the Board. Such request shall be filed not more than thirty (30) days after termination of the leave or in the case of military service, after such service ends, if earlier.

11.620 <u>Re-employment of policeman or fireman</u> ---

(1) **Generally**: Notwithstanding any other provision of this article, the Board in its discretion may re-employ a policeman or fireman at any time within three (3) years after the termination of his or her employment by the City of Quincy if that person had been employed by the City of Quincy as a policeman or fireman, as appropriate, for at least one (1) year and such

employment was not terminated for cause. The age limitation and examination requirement otherwise prescribed in this article shall not apply to any such former policemen or firemen, although all other requirements for employment, such as residence, habits and moral character, shall apply. For purposes of any register of eligibles, the former policeman or fireman on application shall be treated as if among those persons who could be selected for a position by the Board in accordance with this Article, but shall not cause any other person eligible for selection in accordance with this Article to be removed from consideration as well.

(2) **Position**: Any policeman or fireman re-employed under this section shall be re-employed only at the lowest rank or grade in the appropriate department and shall be considered as if never previously employed. Without limiting this provision, re-employed policeman or fireman shall not be entitled to previously held seniority, shall be required to again serve a probationary period and shall not be entitled to be reinstated to any rank or grade other than the lowest rank or grade in the appropriate department.

11.621 Attorney for Board --- The Corporation Counsel shall represent the Board unless the Board is authorized by the municipality to employ its own attorney and such Corporation Counsel shall handle prosecutions before the Board.

11.622 Application of this ordinance --- The provisions of this ordinance shall apply only to full time firemen and full time policemen of a regularly constituted Fire or Police Department and not to any other personnel of any kind of description.

11.623 Administrative review --- The provisions of the Administrative Review Act of the State of Illinois, approved May 8, 1945, and all amendments thereof and the rules adopted thereto shall apply to and govern all proceedings for the review of final administrative decisions of the Board of Fire and Police Commissioners hereunder. The term "administrative decision" is defined in Section 1 of said Administrative Review Act.

11.624 Transfer --- Persons transferred from the employment of a fire protection district by virtue of an act entitled "An Act in Relation to Fire Protection Districts" under Section 21 as now or hereafter amended, shall without examination be assigned to the positions in the classified civil service or under the Fire and Police Commissioners Act of the municipality so far as may be practicable, having duties and responsibilities equivalent; to their fire protection district employment. For the purpose of establishing the civil service status or classified service under the Board of Fire and Police Commissioners of firemen transferred to the municipality. The rank of Chief of the Fire Department shall not be recognized. The appointment of the Chief of the Fire Department shall be subject to the ordinances of the transferee municipality in the appointment of the same. Employees so transferred shall have the same standing, grade, class or rank, which they held in the classified service of the Fire Protection District from which they were transferred. For the purpose of determining seniority and class, trade or rank, each employee shall be credited with the time served by him on the date of such transfer and shall be given the position in the classified service as nearly comparable in responsibilities and duties to his former employment as it may be possible to approximate.

11.625 Pre-emption --- It is found and determined that this Article and the provisions thereof prevails over Division 2 of Article 10 entitled "Board of Fire and Police Commissioners" as amended by act approved August 10, 1965 of Chapter 24 of the Illinois Revised Statutes,

Sections 10-2.1-1 to and including Section 10-2.1-30 of said Act of the Legislature of Illinois in accordance with the provisions of the Illinois Constitution of 1970 as in such case made and provided, and it is the intent of this article to pre-empt said act of the State of Illinois as herein set forth.

11.626 Governing provisions --- This Article is subject to the provisions of the "Illinois Police Training Act", approved August 18, 1965.

ARTICLE VII BOARD OF ZONING APPEALS

Section 11.701 Creation --- There is hereby created a Board of Appeals to serve as Board of Appeals on zoning matters as provided by statute. Said Board shall consist of seven (7) members to be appointed by the Mayor, by and with the advice and consent of the City Council. The Director of the Department of P1anning and Development, Building Inspector, and Assistant Corporation Counsel shall serve as ex-officio, non-voting permanent members of the Board of Appeals.

11.702 Term --- The members of the Board of Appeals shall serve for a term of five (5) years or until their successors in office are duly appointed and qualified; provided, that the term shall be staggered as provided by statute. One of the members of said Board shall be designated by the City Council as chairman of said Board and shall hold office as chairman until his successor is appointed.

11.703 Meetings --- All meetings of the Board of Appeals shall be held at the call of the chairman and at such other times as such Board may determine. The chairman, or in his absence, the acting chairman, may administer oaths and compel the attendance of witnesses. All meetings of the Board shall be open to the public. The Board shall keep minutes of its proceedings showing the vote of each member upon every question, or if absent, or failing to vote, indicating that fact and shall also keep record of its examinations and other official acts. Every rule, regulation, every amendment or repeal thereof, and every order, requirement, decision or determination of the Board shall immediately be filed in the office of the Board and shall be a public record. The Board shall adopt its own rules of procedure not in conflict with this ordinance or with the Illinois Statutes in such case, made and provided.

11.704 Duties --- Subject to the provisions set forth hereinafter, it shall be the duty of the Board of Appeals to hear and decide any appeal or any decision, order or interpretation by the officer whose duty it is to enforce the zoning ordinance; and it shall have the power to reverse any decision of such officer on a vote of not less than four (4) members.

11.705 Appeals --- An appeal may be taken to the Board of Appeals by any person or persons, or by any officer, department, bureau or board of the city affected by a decision of the Building Inspector. Such appeal shall be taken within such time as shall be prescribed by the Board of Appeals by general rule by filing with the Building Inspector and with the Board of Appeals a notice of appeal specifying the grounds thereof. The Building Inspector shall forthwith transmit to the Board all the papers constituting the record from which the action appealed from is taken. A fee of $100.00 shall accompany all notice of appeal.

An appeal shall stay all proceedings and furtherance of the action appealed from, unless the Building Inspector certifies to the Board of Appeals after the notice of appeal has been filed with him, that by reason of facts stated in the certificate, they would, in his opinion, cause imminent peril to life or property in which case, the proceedings shall not be stayed otherwise than by a restraining order, which may be granted by the Board of Appeals or by a court of record on application, on notice of the Building Inspector, and on due cause shown.

The board shall select a reasonable time and place for the hearing of the appeal and give due notice thereof to the parties and shall render a decision on the appeal without unreasonable

delay. Any person may appear and testify at the hearing either in person or by duly authorized agent or attorney.

11.706 <u>Powers of the Board: Interpretation</u> --- The Board of Appeals shall have power and it shall be its duty to interpret the ordinance, being:

(1) They hear and decide appeals where it is alleged there is an error in any order, requirement, decision, or determination made by the Building Inspector in the enforcement of this ordinance.

(2) To permit the extension of a district where the boundary line of a district divides a lot held in a single ownership at the time of the passage of this ordinance.

(3) To interpret the provisions of this ordinance in such a way as to carry out the intent and purposes of the plan as shown upon the map, fixing the several districts accompanying and made a part of the zoning ordinance where the street layout on he ground varies from the street layout as shown on the aforesaid map.

11.707 <u>Powers of the Board: Exceptions</u> --- The Board of Appeals shall hear applications for and make recommendations to the City Council concerning the following two exceptions; provided, however, that such exception shall be permitted only by ordinance:

(1) The reconstruction of a nonconforming building which has been destroyed or partially destroyed by fire or act of God, where the board shall find some compelling public necessity requiring a continuance of the nonconforming use and when a such action would not constitute the continuation of a monopoly.

11.708 <u>Powers of the Board: Variations</u> --- The Board of Appeals shall hear application for and make recommendations to the City Council concerning the following three variations; but such variation shall be permitted only by ordinance:

(1) Variation of the yard, fence, sign, or accessory structure size regulations where there is an exceptional or unusual physical condition of a lot, which condition, when related to the yard, fence, sign, or accessory structure size regulation of this ordinance, would prevent a reasonable or sensible arrangement of buildings, fences or signs on the lot.

(2) Variation of the parking regulation where an applicant demonstrates conclusively that the specific use of a building would make unnecessary the parking spaces required by this ordinance; provided, that such reduction shall not be more than 50 percent of the prescribed requirement.

(3) Variation of the design standards where an applicant can demonstrate the use of alternate building design measures are appropriate relative to the building types found in the area.

11.709 The Board of Appeals shall grant no use variances and shall have no other powers than those specified in Section 11.705, 11.706, 11.707 and 11.708.

11.710 <u>Public Hearings and permits</u> --- The Board shall make no recommendations except in a specific case, and after a public hearing conducted by said Board. A notice of the time and place of such public hearing shall be published in a paper of general circulation in the City of Quincy at least once, not more than 30 or less than 15 days previous to the hearing. Such notices shall contain the particular address or location of the property for which the variation or other ruling by the Board is sought, a brief description of the nature of the appeal, legal description and property tax identification number, and the particular section or sections of this ordinance that

would be applied to the case. The application shall contain such information as the secretary may prescribe from time to time.

No order of the Board or ordinance of City Council permitting the erection or alteration of a building shall be valid for a period longer than twelve months unless a building permit for such erection is obtained within such period, and such erection or alteration is started and proceeds to completion in accordance with the terms of such permit.

No order of the Board or ordinance of City Council permitting a use of a building or premises shall be valid for a period longer than twelve months unless such use is established within such period; provided, however, that where such use permitted is dependent upon the erection or alteration of the building, such order shall continue in force and effect if a building permit for said erection or alteration is obtained within said period and such erection or alteration is started and proceeds to completion in accordance with the terms of such permit.

ARTICLE VIII TRAFFIC COMMISSION

Section 11.801 **Traffic Commission created** -- There is hereby created a Traffic Commission of the city to serve without compensation, which shall consist of the following persons: the Chief of Police, Chief of the Fire Department, City Engineer, Director of Administrative Services, one member of the City Council to be appointed by the Mayor, the Human Resources Director of the City of Quincy and the traffic analysis officer of the Police Department, and five additional members to be appointed by the Mayor with the approval of the City Council The terms of the five appointed members shall begin from the date of their appointment and their successors in office shall be appointed each year thereafter with the term of office of one member expiring annually. Vacancies in such members shall be filled for the unexpired term of the member whose place shall become vacant in the same manner as the original appointment.

11.802 **Function** --- The Traffic Commission shall recommend to the Council any measures deemed desirable to protect the public against and to prevent accidents.

11.803 **Meeting**--- The Traffic Commission shall meet at such times as it may determine or upon call by the chairman or any two members.

ARTICLE IX COMMISSION OF EQUAL OPPORTUNITIES

Section 11.901 Declaration of policy --- The City Council finds that prejudice and the practice of discrimination against any individual or group because of race, color, creed, national origin or ancestry menaces peace and public welfare; and instrumentality should be established through which the citizens of Quincy may be kept informed of developments in human relations, the officers and departments of the city may obtain expert advice and assistance in ameliorative practices to keep peace and good order, and private persons and groups may be officially encouraged to promote tolerance and good will toward all people.

11.902 Establishment of Commission --- There is hereby established a commission to be known as the Commission On Equal Opportunities consisting of fifteen (15) members to be appointed by the Mayor, by and with the advice and consent of the City Council, to serve for three (3) years or until their successors are duly appointed and qualified; provided, however, that of the initial members five (5) shall be appointed for three (3) years, five (5) for two (2) years and five (5) for one (1) year. The Commission shall choose its own chairman and secretary. The Commission shall render an annual report, to the Mayor and City Council.

11.903 Duties and functions --- The Commission shall advise, with the Mayor and City Officials of the City of Quincy, in the interest of equal opportunity understanding and goodwill towards all persons regardless of race, color, creed or national origin - that these may be promoted by City Officials. The Commission shall advise and consult with the City Council on all matters involving racial, religious or other prejudices or discriminations and shall recommend to them such actions as may be deemed appropriate to effectuate equality of. opportunity and good human relations. The Commission shall receive and act upon reports of tension situations and reports of violations of civil rights, attempting to eradicate them through cooperation with the local authorities; and with any other parties requesting advice or assistance.

11.904 Cooperation with civic groups and governmental agencies --The Commission shall enlist the cooperation for racial, religious and ethnic groups, community organizations, labor and business organizations, professional and technical organizations, and other groups in the City of Quincy in carrying on its work.

11.905 Investigation and research --- The Commission shall carry on research, obtain factual data and conduct public hearings to ascertain the status and treatment of racial, religious and ethnic groups in the city and the best means of progressively improving human relations in the entire city; provided, however, that factual or statistical data gathered by the Commission shall not be released by the Commission or its individual members except under the following procedure, and no public hearing shall be held, except under the following procedure:

Proposals or requests for the release of such factual or statistical data or for publication of material gathered or for the conduct of a public hearing shall be made at a regularly scheduled meeting of the Commission and no action on such proposals or requests shall be taken until the next regularly scheduled meeting of the Commission which shall be at least twenty-eight (28) days thereafter, at which time or thereafter, the Commission may take action on such proposals or requests by an affirmative vote of a majority of the full membership of the Commission. The Commission shall, make such recommendations to the Mayor and City Council as in its judgment will effectuate the policy of this ordinance.

ARTICLE X TRANSIT ADVISORY COMMISSION

Section 11.1001 Creation - membership --- There is hereby created an Advisory Commission of the City of Quincy, Illinois, which shall be known as the Transit Advisory Commission and which shall consist of seven (7) members, three of whom shall be citizens of the community not employed by or holding office with the city, and three of whom shall be employees or officers of the city, and one person appointed by the Mayor with advice and consent of the Council, for an initial term of three (3) years whose primary duty will be to represent the citizens with disabilities. The three members, who are officers or employees of the city shall be designated from time to time by the Mayor for indefinite terms. The three members, who are not employees or officers of the city shall be appointed by the Mayor with the advice and consent of the Council. Initial appointment shall be one member for one year; one member for two years; and one member for three years, or until the respective successor of each member is appointed and qualified and as the respective initial terms expire subsequent appointments shall be for a term of three years or until the respective successor of each member is appointed and qualified. The Mayor shall be an ex-officio member of the Commission and shall vote only when the vote results among commission members.

11.1002 Chairman --- The chairman of the Commission shall be selected by the Mayor, with the advice and consent of the Council, from among those members that are not employees or officers of the city. The Mayor may also appoint a secretary, to the Commission other than a commission member who may be an employee of the city.

11.1003 Meetings --- The Commission shall meet regularly at such time and place as it may determine and special meetings as may be necessary or desirable may be called from time to time by the chairman or by any two members thereof.

11.1004 Organization --- The Commission may adopt such rules and by-laws for the conduct of its business as it may deem necessary or desirable.

11.005 Powers and duties --- The Commission shall investigate ways and means to improve transit service within the city and shall make recommendations with regard thereto to the City Council from time to time. The Commission shall study, investigate and make recommendations to the City Council on such matters as the Council or the Mayor or any citizen shall from time to time bring before it, including but not limited to, such matters retarding the operation of the transit system of the city as routes and route changes, schedules, fares, promotional activities, service extensions and levels of service and other similar matters.

11.006 Compensation --- All members of the Commission shall serve without compensation; provided, however, that the commissioners shall be entitled to reimbursement for their actual out-of-pocket expenditures incurred in connection with the duly authorized business of the Commission.

ARTICLE XI RESERVED

ARTICLE XII QUINCY CITY TREE BOARD

Section 11.1201 <u>Establishment</u> --- The Quincy City Tree Board (hereinafter "City Tree Board") is hereby established. Its functions and duties are limited to those set forth in this ordinance and as set forth in any other duly enacted ordinance. Nothing in this ordinance shall be construed as vesting legislative discretion or power in the City Tree Board.

11.1202 <u>Membership</u> ---

(1) **Generally**: The City Tree Board shal1 be composed of twelve (12) commissioners. Nine (9) commissioners shall be appointed by the Mayor with the approval of the City Council. These nine commissioners shall serve without pay. The remaining three commissioners shall be ex-officio and shall not vote. The three Ex-Officio Commissioners shall be: (1) the City Engineer: (2) the Director of the Quincy Park District or his/her representative and (3) the City Forester. Subject to the exception in subsection (2) immediately below, each commissioner of the Tree Commission shall serve for a term of three years.

(2) **Appointment of members**: The initial terms of the commissioners appointed by the Mayor and approved by the Council shall be staggered such that the term of three commissioners shall expire each year. Determination of the initial term, of appointment shall be by lot. Members, including initial appointees, may be reappointed to one additional three (3) year term following the expiration of their initial term of appointment.

(3) **Expiration or vacation of terms**: Within thirty (30) days following the expiration of the term of any appointed commissioner, a successor shall be appointed by the Mayor with the approval of the City Council, and the successor shall serve for a term of three years. Should any commissioner resign or be removed from the City Tree Board. a successor shall be appointed by the Mayor said shall serve for the unexpired period of the vacated term. A member of the City Tree Board may be removed by the Mayor with the approval of a majority of the City Council for good cause. In the event that a vacancy occurs during the term of any member, his successor shall be appointed for the unexpired portion of the term.

(4) **Compensation**: Members of the Board shall serve without compensation.

(5) **Conflicts**: A member of the Tree Board shall not vote on any question in which that member, or any person, firm or corporation with whom said member is associated, directly or indirectly, has a pecuniary or direct personal interest.

(6) **Indemnification**: Members of the Board shall be entitled to legal representation and/or indemnification for their services as board members as provided in Section 13.120 of the Municipal Code of the City of Quincy.

11.1203 <u>Organization</u> ---

(1) **Chairman**: The Tree Board shall select from among its members a chairman. In the temporary absence of the chairman, the members of the board may designate an acting chairman to serve in his or her absence.

(2) **Secretary**: The City Engineer shall serve as secretary of the Board. The Board may designate a temporary secretary, who may or may not be a member of the board, to serve in the absence of the City Engineer.

(3) **Rules**: The Tree Board may adopt such rules or by-laws for the conduct of its business as it may deem necessary or desirable consistent with this article and other applicable ordinances of the City of Quincy.

(4) **Meetings**: The Tree Board shall meet regularly at such times and places as it may determine. Special meetings as are necessary or desirable may be called by the chairman, secretary or any two (2) members of the Board.

(5) **Quorum**: A quorum of the Tree Board shall be three of its voting members. All actions of the Tree Board shall be determined by a majority vote of those present and voting.

11.1204 <u>Powers and duties</u> --- The Tree Board shall have the following power and duties:

(1) To study, investigate and develop and update as necessary and administer arboricultural specifications and regulations for the care, preservation, pruning, planting, replanting, removal or disposition of trees and shrubs along streets and in other public areas subject to the provisions of Article IV (Trees and Shrubbery) of Chapter 14 (Streets and Sidewalks) of this code. Such regulations or manual and any amendments made thereto will be presented to the Mayor and City Council and upon their acceptance and approval shall constitute the official comprehensive city arboricultural regulations for the City of Quincy, State of Illinois.

(2) To cause said arboricultural specifications and regulations manual, and all revisions or amendments thereto to be published and promulgated and shall cause three copies thereof to be available for public inspection at the office of the City Clerk. When requested by the Mayor and City Council, they shall consider, investigate, make finding, report and recommend upon new ordinances or any special matter of question coming within the scope of these power and duties.

(3) To provide advice to the City Forester and other inspectors of the City of Quincy regarding interpretation and/or enforcement of the arboricultural ordinances and regulations

(4) To decide appeals from any order, ruling, decision or interpretation made by the City Forester or other enforcing officer in relation to the enforcement of arboricultural ordinances and regulations, except any notice to abate a nuisance given or issued pursuant to Article I (Nuisance and Abatement of Nuisances) of Chapter 21 (Health Regulations) of the Municipal Code of the City of Quincy.

11.1205 <u>Appeal procedures</u> ---

(1) **Right of appeal**: Any owner or person who is aggrieved or affected by an order, ruling, decision or interpretation of any enforcing officer regarding such matters as herein within the jurisdiction of the Tree Board may appeal such order, ruling, decision or interpretation as herein provided.

(2) **Initiation of appeal**: An owner or person desiring to appeal to the Tree Board shall file with the City Engineer, as secretary of the Tree Board, a notice of appeal. The notice of appeal must be filed and received by the City Engineer within fourteen (14) days from the date of the enforcing officer's order, ruling, decision or interpretation from which appealed. The notice of appeal must specify the specific grounds or reasons for the appeal and include or have attached a copy of the order, ruling, decision or interpretation, or such part thereof, appealed from. A copy of the notice of appeal, together with all attachments, shall also be provided to the enforcing officer but a failure to serve such notice upon the enforcing officer shall not be jurisdictional. Timely filing of the notice of appeal with the City Engineer shall be jurisdictional.

(3) **Hearing and decision**: The Tree Board shall, in every case, hold a hearing. The Board shall, at such hearing, consider all pertinent information presented by the enforcing officer and such owner or person appealing. A decision shall be reached without unreasonable or unnecessary delay. Every decision of the Tree Board shall be in writing and shall be promptly filed in the office of the City Engineer and the enforcing officer. A copy of the decision shall be sent by mail or otherwise delivered to the owner or person appealing. If a decision of the Board

reverses the order, ruling, decision or interpretation of the enforcing officer, the enforcing officer shall take action immediately in accordance with such decision.

(4) **Action taken in decision**: In rendering the decision, the Tree Board may take whatever action it deems appropriate under the circumstances. Such actions may include, but shall not necessarily be limited to, affirming or reversing the decision of the enforcing officer, modifying the order, ruling decision or interpretation of the enforcing officer, rendering its own order, ruling, decision or interpretation or granting, if so requested, a variance from the applicable requirements appealed from.

ARTICLE XIII BUSINESS DISTRICT DEVELOPMENT AND REDEVELOPMENT COMMISSION

Section 11.1301 **Creation** --- There is hereby created and established a commission which shall be known as the Business District Development and Redevelopment Commission, referred to in this article as the "commission".

11.1302 **Membership** --- The commission hereby created shall consist of fourteen (14) voting members to be appointed by the Mayor, with the advice and consent of the City Council. Of the fourteen, one (1) member shall be a member of the City Council. Additionally, one (1) member shall be a Department of Planning and Development Staff ex-officio non-voting member, for a total of fifteen (15) members. All commission members shall be appointed for terms of two (2) years or until their successors are duly appointed and qualified; provided, however, that of the initial members, seven (7) shall be appointed for three (3) years, and seven (7) for two (2) years. Commission members shall serve without compensation, except, however, they shall be entitled to reimbursement for actual out-of-pocket expenditures incurred in connection with the duly authorized business of the commission. This provision shall not be construed to prevent members of the City Council from receiving their usual compensation as such. The membership shall elect one (1) member to be the chairman and one (1) member to be the secretary of the commission. The chairman shall select a vice chair. These executive board members shall each serve 2 year terms with elections held biannually thereafter.

11.1303 **Powers and duties** --- The commission shall have the power and duty to make recommendations to the City Council in the following areas:

(1) To formulate plans for the development and redevelopment of a business district;

(2) To make recommendations to the City Council for land acquisition, including the use of eminent domain;

(3) To make recommendations for application for any grant or loan from the United States Government or State of Illinois for use of a business district development or redevelopment;

(4) To make recommendations concerning the acquisition of funds for use of a business district development or redevelopment, including the issuance of obligation or revenue bonds by the city;

(5) To make recommendations concerning agreements with public or private agencies or persons in connection with the development or redevelopment of a business district.

(6) Using privately donated funds, to conduct studies and draft plans for the re-development of the Washington Theater, which shall be submitted to the City Council for its consideration.

(7) To incur debts and obligations on behalf of the City of Quincy only upon prior approval by the Quincy City Council.

(8) To oversee and implement funding for the restoration and appropriate redevelopment of the Washington Theater complex and to review and make recommendations to the City Council regarding the management of the property.

11.1304 <u>Finances</u> --- The City Council may appropriate money in its budget, or by special appropriation where proper, for the use of the commission in its work. The commission shall keep an accurate account of all receipts and disbursements, and shall give a financial report semi-annually to the City Council.

11.1305 <u>Action on recommendations</u> --- The City Council shall act promptly on all recommendations of the commission. When a recommendation is accepted by the Council, the Council may by resolution designate the commission to act as its agent in carrying out the recommendation.

ARTICLE XIV QUINCY PRESERVATION COMMISSION

Section 11.1401 <u>Establishment of the Quincy Preservation Commission</u> ---

(1) **Creation**: There is hereby created he Quincy Preservation Commission which shall have the powers and perform the duties hereinafter provided.

(2) **Membership**: The Quincy Preservation Commission shall consist of thirteen (13) voting members and one (1) ex-officio non-voting member, or a total of fourteen (14) members. Voting members shall be appointed by the Mayor with the consent of the Quincy City Council, and shall include two (2) aldermen, which shall not be of the same political party, selected by the Mayor as in the case of committees of the City Council. Voting members of the Quincy Preservation Commission shall be appointed on the basis of demonstrated expertise, experience or interest in the areas of architecture, art, history, building construction, engineering, finance, historical and architectural preservation, history, law, neighborhood organization, planning or real estate. The ex-officio non- voting member of the Quincy Preservation Commission shall be the director of the Department of Planning and Development.

(3) **Terms**: The voting members of the Quincy Preservation Commission shall serve terms of three (3) years each. The members of the Quincy Preservation Commission who are aldermen of the City of Quincy shall be appointed for terms of two (2) years. The terms of voting members and aldermen shall be based on years which commence on the first day of May and end on the 30th day of April.

(4) **Transition of terms**: In order to provide for the initial appointment of members to the Quincy Preservation Commission and further to provide for staggered terms of it voting members, the Mayor shall initially appoint members of the commission, with the advice and consent of the City Council, to varying terms. Four (4) of the initial voting members appointed by the Mayor shall be appointed to a two (2) year term, and four (4) voting members shall be appointed to a one (1) year term. As each initial term expires, appointments shall be made for the full term of three (3) years. For purposes of these initial appointments the period of time prior to May, 1982, shall not be considered. The Director of Planning and Community Development shall serve for the term of the Director's office.

(5) **Limitation on terms**: Voting members shall be appointed for no more than two (2) consecutive three (3) years terms, and in no case shall a voting member serve more than seven (7) years consecutively. Members shall serve without compensation.

(6) **Vacancies**: All vacancies occurring in the Quincy Preservation Commission shall be filled by appointment in the same as original appointments. Vacancies shall be filled to complete only the unexpired term of the member in whose position the vacancy is created.

(7) **Continuation in office**: In the event of a vacancy of the expiration of a term, the member then holding: office shall continue as a member until his or her successor is both appointed by the Mayor and such appointment is concurred in by the City Council, if required. The Mayor may, however, declare a position vacant in the event a term has expired prior to the appointment of a successor.

(8) **Compensation**: All members of the Quincy Preservation Commission shall serve without compensation for such services, provided that this shall not be construed to limit an alderman's or the director's right to receive compensation for his or her services as an alderman or the director, and provided further, that members shall be entitled to reimbursement for any actual and reasonable out-of-pocket expenditures incurred in connection with the duly authorized business of the commission.

(9) **Transaction of business**: A quorum shall consist of a majority of the current appointed and confirmed members of the Quincy Preservation Commission. The transaction of business shall be made by a majority vote of those members in attendance while a quorum is present, except that the adoption, modification or rescission of any rule or part thereof adopted by the commission shall require the affirmative vote of two-thirds of the current appointed and confirmed members of the commission, not just those in attendance at a meeting.

11.1402 <u>Organization of the Commission</u> ---

(1) **Officers**: The Mayor shall appoint a chairperson and a vice-chairperson from among the members of the Quincy Preservation Commission for terms of one (1) year. No individual shall serve as chairperson for more than two (2) consecutive one (1) year terms. The chairperson shall preside over meetings. In the absence of the chairperson, the vice-chairperson shall perform the duties of the chairperson. The Director of Planning and Community Development shall serve as secretary of the commission and shall record and maintain the minutes of proceedings of all meetings.

(2) **Rules**: The Quincy Preservation Commission may adopt such rules and by-laws for the conduct of its business as it may deem necessary or desirable, consistent with this article and other applicable ordinances of the city of Quincy.

(3) **Meetings**: The Quincy Preservation Commission shall meet regularly at such time and place as it may determine. Special meetings as are necessary or desirable may be called from time to time by the chairperson or by any two members thereof.

(4) **Conflicts**: No member of the Quincy Preservation Commission shall use his or her membership for any personal advantage or gain or for the advantage or gain of any person, firm or corporation with whom or with which the member is associated, directly or indirectly. Any member of the Commission having a pecuniary or personal interest in any matter coming before the Commission shall so indicate. This shall be made a matter of record. Any member indicating such an interest shall not be involved in any consideration of the matter nor shall the member be counted in determining a quorum.

11.1403 <u>Powers and duties</u> --- The Quincy Preservation Commission is hereby authorized:

(1) To undertake and maintain any study, survey, or research appropriate to the implementation of this article.

(2) To identify areas, places, building, structures, works of art and other similar objects within the jurisdiction of the City of Quincy, which may be eligible for designation.

(3) To recommend to the City Council landmarks and historic districts to be designated, amended or rescinded by ordinance.

(4) To keep a register of all landmarks and historic districts designated, said register shall be maintained by the City Clerk.

(5) To provide financial and technical assistance to the owners of property which has been designated as a landmark or is in a historic district.

(6) To undertake educational programs and activities.

(7) To retain, upon approval by the City Council, professionals, consultants and such staff as may be required.

(8) To consult and cooperate with other city departments and commissions on matters affecting landmarks and historic districts.

(9) To recommend to the City Council properties and districts for nomination to State or National Registers.

(10) To foster the recognition of designated landmarks and historic districts.

(11) To recommend to the City Council the acquisition or disposition of properties through donation, transfer, purchase or sale for a fee or lesser interest, or eminent domain.

(12) To recommend to the City Council the creation of covenants or restrictions binding on landmarks of historic districts.

(13) To receive funds from federal, state, local and private sources for the establishment of a preservation fund to be used for the implementation of its powers and duties.

(14) To cooperate with and enter into agreements with persons, organizations, corporations, foundations and public agencies in matters involving the implementation of its powers and duties.

(15) To recommend to the City Council the adoption of incentives designed to encourage historic preservation and restoration.

(16) To prepare and submit to the Mayor and City Council for approval an annual commission budget.

(17) To implement any other powers and duties given to the Quincy Preservation Commission by the City Council.

(18) To insure and facilitate the preservation of sites, areas, and structures of historical, architectural and aesthetic significance.

(19) To incur debts and obligations on behalf of the City of Quincy only upon prior approval by the Quincy City Council.

ARTICLE XV QUINCY AND ADAMS COUNTY 9-1-1 COMMUNICATIONS SYSTEMS GOVERNING BOARD

Section 11.1501 **Formation of system** --- For the purpose of acquiring, constructing, owning, operating and maintaining a centralized emergency answering system, there is hereby created a Public Communications Systems known as the Quincy and Adams County 9-1-1 Communications System.

11.1502 **Area of service** --- The operating area of the Quincy and Adams County 9-1-1 Communications System shall be the entire Adams County area.

11.1503 **Governing Board** ---

(1) **General**: The powers of the Quincy and Adams County 9-1-1 Communications System shall repose in and be exercised by a Governing Board of eleven members, each member having, one vote on all issues.

(2) **Method of selection**: Three member; shall be appointed by the Adams County Board from its members by the chairman of the County Board. Three members shall be appointed from the City Council by the Mayor. The chairman of the Adams County Board shall appoint a person, not a member of the Adams County Board, as the representative of the Adams County Ambulance Service. The Adams County Sheriff, the Quincy Police Chief, and the Quincy Fire Chief shall be members of the Governing Board by virtue of their respective offices. The eleventh member shall be elected by all of the other members at their first meeting. This member shall be the secretary of the Rural Fire Department Association.

(3) **Terms of office**: The initial term of all appointed members shall be three years except for the members of the County Board and City Council. These members so appointed shall hold office of 1 year, 2 years, and 3 years. The County Board members and the City Council members shall decide by lot the length of their initial terms. Reappointments shall be made in the manner of the original appointments except no appointed member shall serve more than 2 consecutive terms. Vacancies for unexpired terms shall be filled in the same manner as the original appointments. All terms after the initial terms shall be for three years.

(4) Governing Board members shall receive no compensation for their service, but shall be entitled to the necessary expenses including traveling expenses incurred in the discharge of their duties

(5) **Operating procedure**: A majority of board members holding office shall constitute a quorum of the board for the purpose of conducting its business and exercising its powers and for all other purposes. Action may be taken by the board upon a vote of the majority of the members present, unless in any case the by-laws of the board shall require a larger number. The board shall elect a chairman and a vice-chairman from among its members.

(6) **Removal**: An appointed board member may be removed by the body which appointed him, but a member may be removed only for cause after being given a copy of the charges against him or her at least ten (10) days prior to a hearing thereon conducted by that body and being given an opportunity to be heard in person or by counsel. For purposes of this subsection, "cause" shall mean some substantial shortcoming which renders a member's continuance in office in some way detrimental to the board and which law and sound public opinion recognize as good cause for the member no longer holding office. In the event of the removal of any member, record of the proceedings, together with the charges and findings thereon, shall be filed in the office of the clerk of the body which appointed said member.

(7) **Officers and employees**: The board may employ a managing director of the system and may employ dispatchers and such other officers, agents and employees, permanent said temporary, as it may require, and shall fix and determine their qualifications, duties and compensation. For such legal services as it may require, the board may secure the services of any attorney licensed by the State of Illinois. The board may delegate to one or more of its agents or employees such powers and duties as it may deem proper.

11.1504 <u>Powers of Board</u> ---

(1) **General**: The board members may establish or acquire any or all manner of facilities necessary to answer emergency calls under a 9-1-1 system.

(2) The board members of the system shall have the following powers in addition to and not in derogation of any others granted in this ordinance:

(a) To sue and be sued;

(b) To make and execute any and all contracts and other instruments necessary or convenient in the exercise of its powers;

(c) To make, amend, and repeal by laws, rules and regulations not inconsistent with this ordinance;

(d) To sell, transfer, dispose of, or purchase any property or interest therein at any time upon such terms and conditions as it may determine with public bidding where required by law;

(e) To invest funds, not required for immediate disbursement in property or securities legal for investment of funds controlled by savings banks;

(f) To apply for, accept and use grants, gifts or other financial assistance from any source and with the consent of the corporate authorities of the City of Quincy and Adams County, to borrow money from the United States Government or any agency thereof or from any other source for the purposes o the system;

(g) Such other powers as may be subsequently given by the City of Quincy and County of Adams.

11.1505 <u>Funding of system</u> --- All funding for all set up costs and all operations shall be paid by the City of Quincy and County of Adams with the City paying 60% of all costs and the County paying 40% of all costs.

11.1506 <u>Exemption from taxation</u> --- The system shall be exempt from all county and municipal taxes and registration and license fees; the system shall be exempt from all State taxes and registration and license fees to the extent allowable by law. All property of the system is declared to be public property devoted to an essential public and governmental function and purpose and shall be exempt from all taxes and special assessments of the State or by an subdivision thereof to the extent allowable by law.

11.1507 <u>Annual budget</u> --- The members of the governing board shall pass and approve an annual budget and shall submit said budget to the County Board and City Council in sufficient time before said authorities adopt their respective budget, so that necessary amounts may be included in the budgets of the corporate authorities.

11.1508 **<u>Amendments</u>** --- This ordinance may be amended from time to time only by an ordinance passed by both the County Board and City Council with the same number of votes being necessary for passage as in other ordinances passed by the respective corporate body.

ARTICLE XVI QUINCY ECONOMIC DEVELOPMENT LOAN COMMITTEE

Section 11.1601 <u>Creation</u> --- There is hereby created and established the Quincy Economic Development Loan Committee. The Quincy Economic Development Loan Committee is formed for the purpose of administering the loan guaranty and direct loan programs of the Quincy Economic Development Plan approved by the Quincy City Council and the appropriate agencies or agents of the United States of America.

11.1602 <u>Membership</u> ---

(1) **Generally**: The Quincy Economic Development Loan Committee shall consist of five (5) members, selected on the basis of their respective experience in credit evaluation, loan processing and servicing business operations and collection, and foreclosure proceedings, and two (2) Aldermen, one from each political party. All members shall be appointed by the Mayor with the advice and consent of the City Council. Members may be reappointed to serve on the committee from time to time. The Director of the Department of Planning and Development shall serve on the committee as an ex-officio, non-voting, current member.

(2) **Terms**: The members of the Quincy Economic Development Loan Committee shall be appointed for terms of three (3) years. All terms shall be based on years which commence on the 1st day of May and end on the 30th day of April.

(3) **Transition of terms**: In order to provide for the initial appointment of members of the Quincy Economic Development Loan Committee and further to provide for staggered terms of members, the Mayor shall initially appoint members of the committee, with the advice and consent of the City Council, to varying terms as determined by the Mayor. One (1) member shall be appointed for a term of one (1) year. Two (2) of each of the remaining members of the committee shall be appointed, respectively, for terms of two (2) and three (3) years. The two (2) aldermanic appointments shall be made for a period of two (2) years. The chairman shall be one of those members appointed for a three (3) year term. For purposes of the initial appointment of members, the year or years of appointment shall run from May 1, 1985, although effectively appointed prior to that date. The period of holding office prior to such date shall not be considered. After such initial appointments, all appointments shall be made for the appropriate terms as provided above. After appointment, the designated chairman shall call an organizational meeting of the committee.

(4) **Vacancies**: All vacancies occurring in the Quincy Economic Development Loan Committee shall be filled by appointment in the same manner as original appointments. Vacancies shall be filled to complete only the unexpired term of the member in whose position the vacancy is created.

(5) **Compensation**: All members of the Quincy Economic Development Loan Committee shall serve without compensation for such services, provided that members shall be entitled to reimbursement for actual and reasonable expense or expenditures incurred in connection with the duly authorized business of the committee.

(6) **Conflicts**: No member of the Quincy Economic Development Loan Committee shall be interested, directly or indirectly, in his or her name or in the name of any other person, association, trust or corporation, in any loan made or guaranteed pursuant to the Quincy Development Plan administered by such committee. However, a loan may be made if with a person, firm, partnership, association, corporation or cooperative association in which such interested member has less than a seven and one-half percent (7 ½ %) share in the ownership;

such interested member publicly discloses the nature and extent of his or her interest prior to or during deliberation, concerning the loan; such interested member abstains from voting on the loan, though he or she shall be considered present for purposes of establishing a quorum; and, such loan is approved by a majority vote of those members presently holding office. Further, nothing therein shall preclude loan guaranties for or direct loans to customers, or depositors of a local bank, savings and loan association or other ending institution regardless of whether a committee member is interested in such institution as an officer or employee or as a holder of less than seven and one-half percent (7 ½ %) of the total ownership interest even if the institution serves as the lender of a guaranteed loan.

11.1603 Organization ---

(1) **Chairman**: A member of the Quincy Economic Development Loan Committee shall be designated by the Mayor as its chairman. Once designated, the chairman shall continue to serve at the pleasure of the Mayor until the appointment of a new chairman or until the termination of such member's term. The removal of the chairman shall not have the effect of limiting the member's term of office as a member of the committee. The chairman may resign as chairman and continue as a member of the committee. In the temporary absence of the chairman, the members of the committee may designate an acting chairman to serve in the chairman's absence. The committee may also appoint a secretary who may, but need not be, a member of the committee and may be a person employed by or holding an office with the City of Quincy.

(2) **Rules**: The Quincy Economic Development Loan Committee may adopt such rules or bylaws for the conduct of its business as it may deem necessary or desirable, consistent with this article, other applicable ordinances of the City of Quincy and to terms and conditions of the Quincy Economic Development Plan as now or hereafter adopted. Such rules or bylaws may include, but shall not be limited to, rules or bylaws relative to the administration of the loan guaranty and direct loan programs of the Quincy Economic Development Plan.

(3) **Meetings**: The Quincy Economic Development Loan Committee shall meet regularly at such times and places as it may determine. Special meetings, as are necessary or desirable, may be called from time to time by the chairman or any two (2) members thereof.

(4) **Quorum**: A quorum of the Quincy Economic Development Loan Committee shall be a majority of its members, including the chairman.

11.1604 Powers and duties --- The Quincy Economic Development Loan Committee shall have the powers and duties set forth in this section and such other powers and duties and the City Council may hereafter prescribe. The powers and duties of the Quincy Economic Development Loan Committee shall be as follows:

(1) To administer the Quincy Economic Development Plan including, in connection therewith, the loan guaranty program and the direct loan program.

(2) To determine and establish, consistent with the Quincy Economic Development Plan, procedures and policies for credit evaluation, loan processing and servicing, and the collection and foreclosure of loans made.

(3) To make specific loan guaranties, direct loans and/or grants in accordance with and subject to the terms, conditions and restrictions of the Quincy Economic Development Plan, as from time to time amended. The Mayor is authorized to execute all documents that are necessary on behalf of the City.

(4) To submit an annual report to the Mayor and City Council relative to the operation and administration of the Quincy Economic Development Plan and the Quincy Economic Development Loan Committee.

(5) To perform such other acts as may be necessary or desirable to accomplish any or all of the foregoing.

11.1605 <u>Finances and records</u> --- All financial records, checks or warrants relative to the Quincy Economic Development Plan or the Quincy Economic Development Loan Committee shall be maintained in City of Quincy Community Development office. All funds held by or used in connection with the Quincy Economic Development Plan shall be held by or promptly deposited by the City Treasurer and the City Treasurer upon execution of a written voucher signed by the chairman shall issue drafts to the committee from said funds. Loan files shall be kept and maintained as directed by the committee.

ARTICLE XVII ELECTRICAL COMMISSION

Section 11.1701 <u>Creation</u> --- There is hereby created and established the Electrical Commission of the City of Quincy. The Electrical Commission is formed for the purpose of acting as an advisor and deciding appeals from orders, requirements, decisions or determinations made by the Building Inspector or others, as appropriate, in relation to the enforcement of certain provisions of this code or as otherwise authorized by ordinance.

11.1702 <u>Membership</u> ---

(1) **Generally**: The Electrical Commission shall consist of six (6) members. Five (5) members of the Commission shall be appointed by the Mayor with the advice and consent of the City Council. The remaining member shall be the Chief of the Fire Department of the City of Quincy or a person designated at his or her pleasure from time to time from within the Fire Department. Members may be appointed to serve on the Commission from time to time.

(2) **Qualifications of other five members**: Of the five members of the Electrical Commission appointed by the Mayor: One (1) member shall be a licensed architect or registered professional or structural engineer or a representative thereof; one (1) member shall be an electrical contractor or a representative of an electrical contractor; one (1) member shall be a person holding a master contractor's registration certificate as provided in Article IV (Electrical Contractors) of Chapter 19 (Business Licenses) of this Code; one (1) member shall be an electrician having four (4) or more years experience as a practicing electrician; and, one (1) member shall be employed by or a representative of a public utility providing electric service in the City of Quincy. A member may serve both on the Electrical Commission and the Building Commission of the City of Quincy.

(3) **Terms**: Members of the Electrical Commission shall be appointed for terms of five (5) years. Appointments to the commission shall, as necessary, be staggered by the Mayor with the advice and consent of the City Council to varying terms as determined by the Mayor so that the term of one (1) member expires each year. All terms shall be based on years which commence on the 1st day of May and end on the 30th day of April.

(4) **Vacancies**: All vacancies occurring on the Electrical Commission shall be filled by appointment in the same manner as original appointments. Vacancies shall be filled to complete only the unexpired term of the member in whose position the vacancy is created. Additionally, during the temporary absence of a member and alternate, if any, and for the continuation of such absence, the Mayor may designate a qualified substitute. The Mayor may further, with the advice and consent of the City Council, appoint alternate members who may sit on the Electrical Commission in the absence of any regular members. Such alternate shall meet the same qualifications required for regular members of the Electrical Commission and, while serving on the Electrical Commission, an alternate shall have the full power and authority of the regular member.

(5) **Continuation in office**: In the event of a vacancy or expiration of a term, the member then holding office shall continue as a member until his or her successor is both appointed by the Mayor and such appointment is concurred in by the City Council. The Mayor may, however, declare a position vacant in the event a term has expired prior to the appointment of a successor.

(6) **Compensation**: All members of the Electrical Commission shall serve without compensation for such services, provided that members shall be entitled to reimbursement for actual and reasonable out-of-pocket expenses incurred in connection with duly authorized business of the Commission.

(7) **Conflicts**: A member of the Electrical Commission shall not pass on any question in which that member is engaged as a contractor or material dealer or in the preparation of plans or specifications or in which the member has any personal interest.

11.1703 <u>Organization</u> ---

(1) **Chairman**: The Electrical Commission shall select from among its members a chairman. In the temporary absence of the chairman, the members of the commission may designate an acting chairman to serve in the chairman's absence. The chairman may resign as chairman and continue as a member of the Electrical Commission.

(2) **Secretary**: The Electrical Inspector shall serve as secretary of the commission. In the absence of the Electrical Inspector, the Electrical Commission may designate a temporary secretary who may or may not be a commission member.

(3) **Rules**: The Electrical Commission may adopt such rules or by-laws for the conduct of its business as it may deem necessary or desirable consistent with this article and other applicable ordinances of the City of Quincy.

(4) **Meetings**: The Electrical Commission shall meet regularly at such times and places as it may determine. Special meetings as are necessary or desirable may be called from time to time by the chairman, secretary or any two (2) members thereof.

(5) **Quorum**: A quorum of the Electrical Commission shall be four (4) of its members. All actions of the Electrical Commission shall be determined by a majority vote of those present and voting.

11.1704 <u>Powers and duties</u> --- The Electrical Commission shall have the following powers and duties, and none others:

(1) To give the Building Inspector and other inspectors of the City of Quincy advice pertaining to electrical matters, including, but not necessarily limited to, code interpretations.

(2) To make recommendations for new ordinances or changes in electrical-related provisions.

(3) To review new editions of the National Electrical Code, as from time to time promulgated, and make recommendations regarding their adoption.

(4) To review and make recommendations regarding the electrical permit fee schedule.

(5) To make recommendations to the Building Inspector regarding electrical contractor license tests.

(6) To provide advice to the Building Inspector and the other inspectors of the City of Quincy regarding the making of electrical inspections and the issuance of electrical licenses.

(7) To promote and coordinate public awareness of good electrical practices.

(8) To provide recommendations to the Building Inspector and other inspectors of the City of Quincy regarding materials for use in construction, which should or should not be allowed by the City of Quincy.

(9) To promote good relations between the City of Quincy, its' inspectors, electrical suppliers, electrical contractors and others.

(10) To decide appeals from any order, ruling, decision or interpretation made by the Building Inspector or other enforcing officer in relation to the enforcement of the provisions of the National Electrical Code adopted pursuant to section 26.002 of this Code.

(11) To decide appeals from any decision of the Building Inspector or other enforcing officer denying, suspending or revoking an electrical contractor's certificate or registration pursuant to Article IV of Chapter 19 of this Code.

11.1705 <u>Appeal procedures</u> ---

(1) **Right of appeal**: Any owner or person who is aggrieved or affected by an order, ruling, decision or interpretation of an enforcing officer regarding such matters as are within the jurisdiction of the Electrical Commission may appeal such order, ruling, decision or interpretation as herein provided.

(2) **Initiation of appeal**: An owner or person desiring to appeal to the Electrical Commission shall file with the City Engineer, as secretary of the Electrical Commission, a notice of appeal. The notice of appeal must be filed and received by the City Engineer within fourteen (14) days from the date of the enforcing officer's order, ruling, decision or interpretation from which appealed. The notice of appeal must specify the specific grounds or reasons or the appeal and include or have attached a copy of the order, ruling, decision or interpretation, or such part thereof, appealed from. A copy of the notice of appeal, together with all attachments, shall also be provided to the enforcing officer but a failure to serve such notice upon the enforcing officer shall not be jurisdictional. Timely filing of the notice of appeal with the City Engineer shall be jurisdictional.

(3) **Hearing and decision**: The Electrical Commission shall, in every case, hold a hearing. The Commission shall, at such hearing, consider all pertinent information presented by the enforcing officer and such owner or person appealing. A decision shall be reached without unreasonable or unnecessary delay. Every decision of the Electrical Commission shall be in writing and shall be promptly filed in the office of the City Engineer and the enforcing officer. A copy of the decision shall be sent by mail or otherwise delivered to the owner or person appealing. If a decision of the Commission reverses the order, ruling, decision or interpretation of the enforcing officer, the enforcing officer shall take action immediately, in accordance with such decision.

(4) **Action taken in decision**: In rendering its decision, the Electrical Commission may take whatever action it deems appropriate under the circumstances. Such actions may include, but shall not necessarily be limited to, affirming or reversing the decision of the enforcing officer, modifying the order, ruling decision or interpretation of the enforcing officer, rendering its own order, ruling, decision or interpretation or granting, if so requested, a variance from the applicable requirements appealed from.

(5) **Variance**: A variance may not be granted by the Electrical Commission except after a public hearing. Public notice of the hearing to grant a variance shall be published not less than fifteen (15) days nor more than thirty (30) days before such hearing in a newspaper published within the City of Quincy. The costs of publication shall be paid in advance by the owner, or person, seeking the variance. The applicable provisions sought to be varied shall not be varied unless, in the opinion of the Electrical Commission, the enforcement thereof would result in practical difficulty or unnecessary hardship, provided that the spirit of the applicable provision shall nevertheless be observed, public health, safety and welfare secured and substantial justice done. A decision of the Electrical Commission to vary the application of any provisions shall specify in what manner such variation shall be made, the conditions upon which it is made and the reasons therefore.

(6) **Determination of City Council**: Any person appealing to the Electrical Commission may, within thirty-five (35) days after such decision is tendered, file a request in writing with the City Engineer that he or she transmit a copy of the decision to the City Council, which the City Engineer shall do forthwith. The determination of the Commission shall automatically be final unless such determination is appealed to the City Council and is reversed by a two-thirds vote of

the members of such City Council within fourteen (14) days after the decision is first presented to the City Counci1.

11.1706 <u>Other boards and commission</u> --- The power and authority of the Electrical Commission shall be limited to those powers and authorities set forth in this article or otherwise specifically by ordinance or other action of the City Council. Nothing herein contained shall be construed to interfere with the power and authority of any other boards or commissions with regard to matters within their respective jurisdictions, including, but not necessarily limited to, the Plan Commission, the Zoning Board of Appeals, the Quincy Preservation Commission and the Building Commission.

ARTICLE XVIII BUILDING COMMISSION

Section 11.1801 <u>Creation</u> --- There is hereby created and established the Building Commission of the City of Quincy. The Building Commission is formed for the purpose of acting as an advisor and deciding appeals from orders, requirements, decisions or determinations made by the Building Inspector or others, as appropriate, in relation to the enforcement of certain provisions of this code or as otherwise authorized by ordinance.

11.1802 <u>Membership</u> ---

(1) **Generally**: The Building Commission shall consist of five (5) members. All members shall be appointed by in Mayor with the advice and consent of the City Council. Members may be reappointed to serve on the Commission from time to time.

(2) **Qualifications of members**: One (1) of the members of the Building Commission shall be a licensed architect; one (1) shall be a licensed structural or mechanical engineer; and the remaining members shall be persons engaged or employed in the construction industry as builders or contractors or in associated or related businesses. A member may serve both on the Building Commission and the Electrical Commission of the City of Quincy.

(3) **Terms**: Members of the Building Commission shall be appointed for terms of five (5) years. Appointments to the Commission shall, as necessary, be staggered by the Mayor with the advice and consent of the City Council to varying terms as determined by the Mayor so that the term of one (1) member expires each year. All terms shall be based on years which commence on the 1st day of May and end on the 30th day of April.

(4) **Vacancies**: All vacancies occurring on the Building Commission shall be filled by appointment in the same manner as original appointments. Vacancies shall be filled to complete only the unexpired term of the member in whose position the vacancy is created. Additionally, during the temporary absence of a member and alternate, if any, and for the continuation of such absence, the Mayor may designate a qualified substitute. The Mayor may further, with the advice and consent of the City Council, appoint alternate members who may sit on the Building Commission in the absence of any regular members. Such alternate shall meet the same qualifications required for regular members of the Building Commission and, while serving on the Building Commission, an alternate shall have the full power and authority of the regular member.

(5) **Continuation in office**: In the event of a vacancy or expiration of a term, the member then holding office shall continue as a member until his or her successor is both appointed by the Mayor and such appointment is concurred in by the City Council. The Mayor may, however, declare a position vacant in the event a term has expired prior to the appointment of a successor.

(6) **Compensation**: All members of the Building Commission shall serve without compensation for such services, provided that members shall be entitled to reimbursement for actual and reasonable out-of-pocket expenses incurred in connection with early authorized business of the Commission.

(7) **Conflicts**: A member of the Building Commission shall not pass on any question in which that member is engaged as a contractor or material dealer or in the preparation of plans or specifications or in which the member has any personal interest.

11.1803 <u>Organization</u> ---

(1) **Chairman**: The Building Commission shall select from among its members a chairman. In the temporary absence of the chairman, the members of the commission may

designate a voting chairman to serve in the chairman's absence. The chairman may resign as chairman and continue as a member of the Building Commission.

(2) **Secretary**: The Building Inspector shall serve as secretary of the Commission. In the absence of the Building Inspector, the Building Commission may designate a temporary secretary who may or may not be a Commission member.

(3) **Rules**: The Building Commission may adopt such rules or bylaws for the conduct of its business as it may deem necessary or desirable consistent with this article and other applicable ordinances of the City of Quincy.

(4) **Meetings**: The Building Commission shall meet regularly at such times and places as it may determine. Special meetings, as are necessary or desirable, may be called from time to time by the chairman, secretary or any two (2) members thereof.

(5) **Quorum**: A quorum of the Building Commission shall be three (3) of its members. All actions of the Building Commission shall be determined by a majority vote of those present and voting.

11.1804 <u>Powers and duties</u> --- The Building Commission shall have the powers and duties set forth in this Section or this Code and such other powers and duties as the City Council may hereafter prescribe. In no event shall the Building Commission have the power to make expenditures or contracts for services or materials except as specifically provided for herein or as otherwise authorized by the City Council. The powers and duties of the Building Commission shall be as follows:

(1) To decide appeals from any order, ruling, decision or interpretation made by the Building Inspector or other enforcing officer in relation to the enforcement of the provisions of the International Building Code adopted pursuant to Section 23.101 of this Code, except any notice to abate a nuisance given or issued pursuant to Article I (Nuisance and Abatement of Nuisances) of Chapter 21 (Health Regulations) of the Municipal Code of the City of Quincy.

(2) To decide appeals from any order, ruling, decision or interpretation made by the Building Inspector or other enforcing officer in relation to the enforcement of the provisions of the International Building Code adopted pursuant to Section 23.601 of this code, except any notice to abate a nuisance given or issued pursuant to Article I (Nuisances and Abatement of Nuisances) of Chapter 21 (Health Regulations) of the Municipal Code of the City of Quincy.

(3) To hear application for and grant variances from the restrictions and regulations regarding development in floodplain areas, subject to the standards and limitations of Section 11.805 (5) and Section 23.609 of this Code.

11.1805 <u>Appeal procedures</u> ---

(1) **Right of appeal**: Any owner or person who is aggrieved or affected by a order, ruling, decision or interpretation of an enforcing officer regarding such matters as are within the jurisdiction of the Building Commission may appeal such order, ruling decision or interpretation as herein provided.

(2) **Initiation of appeal**: An owner or person desiring to appeal to the Building Commission shall file with the Building Inspector, as secretary of the Building Commission, a notice of appeal. The notice or appeal must be filed and received by the Building Inspector within fourteen (14) days from the date at the enforcing officer’s order, ruling, decision or interpretation from which appealed. The notice of appeal must specify the specific grounds or reasons for the appeal and include or have attached a copy of the order, ruling, decision or interpretation, or such part thereof, appealed from. A copy of the notice of appeal, together with all attachments, shall

also be provided to the enforcing officer but a failure to serve such notice upon the enforcing officer shall not be jurisdictional. Timely filing of the notice of appeal with the Building Inspector shall be jurisdictional.

(3) **Hearing and decisions**: The Building Commission shall, in every case, hold a hearing. The Commission shall, at such hearing, consider all pertinent information presented by the enforcing officer and such owner or person appealing. A decision shall be reached without unreasonable or unnecessary delay. Every decision of the Building Commission shall be in writing and shall be promptly filed in the office at the Building Inspector and the enforcing officer. A copy or the decision shall be sent by mail or otherwise delivered to the owner, or person appealing. If a decision of the Commission reverses the order, ruling, decision or interpretation of the enforcing officer, the enforcing officer shall take action immediately in accordance with such decision.

(4) **Action taken in decision**: In rendering its decision, the Building Commission may take whatever action it deems appropriate under the circumstances. Such actions may include, but shall not necessarily be limited to, affirming or reversing the decision of the enforcing officer, modifying the order, ruling, decision or interpretation of the enforcing officer, rendering its own order, ruling, decision or interpretation or granting, if so requested, a variance from the applicable requirement appeal from.

(5) **Variance**: A variance may not be granted by the Building Commission except after a public nearing. Public notice of the hearing to grant a variance shall be published not less than fifteen (15) days nor more than thirty (30) days before a such hearing in a newspaper published within the City of Quincy. The costs of publication shall be paid in advance by the owner or person seeking the variance. The applicable provisions sought to be varied shall not be varied unless, in the opinion of the Building Commission, the enforcement thereof would result in practical difficulty or unnecessary hardship, provided that the spirit of the applicable provision shall nevertheless be observed, public health, safety and welfare secured and substantial justice done. A decision of the Building Commission to vary the application of any provisions shall specify in what manner such variation shall be made, the condition upon which it is made and the reasons therefore.

(6) **Determination of City Council**: Any person appealing to the Building Commission may, within fourteen (14) days after such decision is tendered, file a request in writing with the Building Inspector that he or she transmit a copy of the decision to the City Council, which the Building Inspector shall do forthwith. The determination of the Commission shall automatically be final unless such determination is appealed to the City Council and is reversed by a two-thirds vote of the members of such City Council within fourteen (14) days after the decision is first presented to the City Council.

11.1806 <u>Other boards and commissions</u> --- The power and authority of the Building Commission shall be limited to those powers and authorities set forth in this Article or otherwise specifically by ordinance or other action of the City Council. Nothing herein contained shall be construed to interfere with the power and authority of any other boards or commissions with regards to matters within their respective jurisdictions, including, but not necessarily limited to the Plan Commission, the Zoning Board of Appeals, the Quincy Preservation Commission and the Electrical Commission.

ARTICLE XIX SISTER CITY COMMISSION

Section 11.1901 **Creation - membership** --- There is hereby created a commission to be known as the Sister City Commission consisting of 18 members to be appointed by the Mayor by and with the advice and consent of the City Council. Said 5 additional new members shall be appointed for a period of 3 years and any subsequent terms will be for 3 years. All present members of the Commission shall retain their membership as originally appointed. The Commission shall choose its own chairman and secretary.

11.1902 **Meetings** --- The Commission shall meet regularly at such time and place as it may determine and special meetings as may be necessary or desirable may be called from time to time by the chairman or by any two members thereof.

11.1903 **Organization** --- The Commission may adopt such rules and bylaws for the conduct of its' business as it may deem necessary or desirable.

11.1904 **Powers and duties** --- The Commission shall consider and determine ways of creating a greater mutual understanding and friendship between Quincy and its sister city and the nations of the United States and West Germany.

11.1905 **Compensation** --- All members of the Commission shall serve without compensation; provided, however, that the commissioners shall be entitled to reimbursement for their actual out-of-pocket expenditures incurred in connection with the duly authorized business of the Commission.

ARTICLE XX FOREIGN FIRE INSURANCE BOARD

Section 11.2001 <u>Establishment</u> --- There is hereby established the Foreign Fire Insurance Board of the City of Quincy Fire Department, pursuant to section 11-10-2 of the Illinois Municipal Code (65 ILCS 5/11-10-2). The purpose of the Board is to implement and facilitate the provisions of Division 10 (Foreign Fire Insurance Company Fees) of Article 11 (Corporate Powers and Functions) of the Illinois Municipal Code Section 19.502 (Fees) and article V (Foreign Fire Insurance Companies) of Chapter 19 (Business Licenses) of this Code.

11.2002 <u>Officers</u> --- All members of the City of Quincy Fire Department shall be eligible to be elected as officers of the department Foreign Fire Insurance Board. The members of the department shall elect the officers of the board. Officers shall include a treasurer, and they shall make needful rules and regulations with respect to the department Foreign Fire Insurance Board and the management of the money to be appropriated to the Board. The officers of the department Foreign Fire Insurance Board shall develop and maintain a listing of those items that the Board feels are appropriate expenditures under state law regarding Foreign Fire Insurance Company fees. The treasurer of the department Foreign Fire Insurance Board shall give a sufficient bond to the city. This bond shall be approved by the Mayor and conditioned upon the faithful performance by the treasurer of his or her duties under this ordinance and the rules and regulations provided in Section 11-10-2 of the Illinois Municipal Code. The treasurer of the department Foreign Fire Insurance Board shall receive the appropriated money, pursuant to Section 19.502 of this Code, and shall pay out the money upon the order of the department Foreign Fire Insurance Board for the maintenance, use and benefit of the department. The treasurer shall make all records of the department Foreign Fire Insurance Board available to the city's auditors on an annual basis for verification that all purchases made with appropriated money are for the maintenance, use and benefits of the department.

CHAPTER 12

HOME RULE UNIT ENABLING PROVISIONS

ARTICLE I GENERALLY

ARTICLE II EMINENT DOMAIN

ARTICLE I GENERALLY

Section 12.101 **<u>Quincy as home rule unit</u>** -- The City of Quincy is a home rule unit of local government pursuant o the provisions of Section 6, Article VII(Local Government) of the Constitution of the State of Illinois.

12.102 **<u>Purpose of chapter</u>** --- The purpose of this chapter is to set forth as part of this code various enabling provisions adopted by the City of Quincy as a home rule unit of local government. The inclusion of this chapter shall not be construed to diminish the exercise by the City of Quincy in this code or otherwise its home rule powers. It is the declared intent of the City of Quincy to exercise its home rule powers to the full extent allowed by the Constitution of the State of Illinois.

ARTICLE II EMINENT DOMAIN

Section 12.201 **Compensation - jury** --- Private property shall not be taken or damaged for public use without just compensation; and that in all cases in which compensation is not made by the City of Quincy in its corporate capacity, such compensation shall be ascertained by a jury, as hereinafter prescribed. Where compensation is so made by the City of Quincy, any party upon application may have a trial by jury to ascertain the just compensation to be paid. Such demand on the part of the City of Quincy shall be filed with the petition for condemnation of the City of Quincy. Where the City of Quincy is petitioner, a defendant desirous of a trial by jury must file a demand therefore on or before the return date of the summons served on him or fixed in the publication in case of defendants served by publication. In the event no party in the condemnation suit demands a trial by jury as provided for by this section, then the trial shall be before the court sitting without a jury.

12.202 **Proceedings - parties** --- Where the right to take private property for public use without the owner's consent or the right to construct or maintain any public road, railroad, plank road, turnpike road, canal or other public work or improvement, or which may damage property not actually taken has been heretofore or shall hereafter be conferred by general law or special charter upon any corporate or municipal authority, public body, officer or agent, person, commissioner or corporation and the compensation to be paid for or in respect of the property sought to be appropriated or damaged for the purposes mentioned cannot be agreed upon by the parties interested, or in case the owner of the property is incapable of consenting, or the owner's name or residence is unknown, or the owner is a nonresident of the state, the party authorized to take or damage the property so required, or to construct, operate and maintain any public road railroad, plank road, turnpike, road, canal or other public work or improvement, may apply to the circuit court of the county where the property or any part thereof is situated, by filing with the clerk a petition, setting forth, by reference, his, her or their authority in the premises, the purposes for which the property is sought to be taken or damaged, a description of the property, the names of all persons interested therein as owners or otherwise as appearing of record, if known, or if not known stating that fact and praying such court to cause the compensation to be paid to the owner to be assessed. If it appears that any person not in being, upon coming into being, is, or may become or may claim to be, entitled to any interest in the property sought to be appropriated or damaged the court shall appoint some competent, and disinterested person as guardian ad litem, to appear for and represent such interest in the proceeding and to defend the proceeding on behalf of the person not in being, and any judgment or decree rendered in the proceeding shall be as effectual for all purposes as though the person was in being and was a party to the proceeding. If the proceeding seeks to affect the property of persons under guardianship, the guardians or conservators of persons having conservators shall be made parties defendant. Persons interested whose names are unknown, may be made parties defendant by the same descriptions and in the same manner as provided in other civil cases. No property belonging to a railroad or other public utility subject to the jurisdiction of the Illinois Commerce Commission may be taken or damaged, pursuant to the provisions of this Act, without the prior approval of the Illinois Commerce Commission.

12.203 <u>Findings</u> --- The City Council finds and determines that:

(1) The making of improvements for which the City of Quincy is authorized by the Constitution of the State of Illinois to exercise the power of eminent domain is a matter pertaining to the government and affairs of the City of Quincy.

(2) The inability of the City of Quincy in exercising its rights to eminent domain to secure a speedy and expeditious transfer of title to property detrimentally affects the city and its citizens and taxpayers in that:

(a) Recalcitrance and dilatory actions by property owners requires the city to delay necessary improvements and thereby pay drastically increased construction costs during times of inflation; or avoid delay by paying property owners compensation far in excess of just compensation;

(b) Such added costs forced upon the city do not serve any public purpose or protect any private property rights.

(3) A speedy transfer of title, consistent with protection of the rights of property owners will speed constriction of local public improvements, avoid unnecessary costs, reduce the expenditures of taxpayers funds, and encourage prompt settlement as to just compensation between the City of Quincy and private property owners from whom the city seeks to acquire property interests.

(4) The method of immediate vesting of title, being established by law, is fair, just and a constitutional procedure.

12.204 <u>Motions or taking</u> ---

(1) **Generally**: In any proceeding under the provisions of Section 12.201 et seq. by the City of Quincy for the acquisition of land or interests for the purposes specified in the Constitution of the State of Illinois, the petitioner, City of Quincy, at any time after the petition has been filed and before judgment is entered in the proceeding, may file a written notice requesting that, immediately or at some specified later date, the City of Quincy (herein referred to as petitioners) either be vested with the fee simple title (or such lesser estate, interest or easement, as may be required) to the real property, or specified portion thereof, which is the subject of the proceeding, and be authorized to take possession of and be such property; or only be authorized to take possession of and to use such property, if such possession and use, without the vesting of time, are sufficient to permit the petitioner to proceed with the project until the final ascertainment of compensation.

(2) **Contents**: Except as hereinafter stated, the motion of taking shall include:

(a) An accurate description of the property to which the motion relates and the estate or interest sought to be acquired therein;

(b) The formally adopted schedule or plan of operation for the execution of the petitioner's project;

(c) The situation of the property of which the motion relates with respect to the schedule or plan; and,

(d) The necessity for taking such property in the manner requested in the motion. If the schedule or plan of operation is not set forth fully in the motion, a copy of such schedule or plan shall be attached to the motion.

12.205 <u>Hearing and preliminary finding of compensation</u> ---

(1) **Setting and notice**: The court shall fix a date, not less than five (5) days after the filing of such motion, for the hearing thereon, and shall require due notice to be given to each party to the proceeding whose interests would be affected by them taking requested, except that any party who has been or is being served by publication and who has not entered his appearance in the proceeding need not be given notice unless the court so requires, in its discretion and in the interests of justice.

(2) **Conduct of hearing**: At the hearing, if the court has not previously, in the same proceeding, determined that the petitioner has authority to exercise the right of eminent domain, that the property sought to be taken is subject to the exercise of such right, and that such right is not being improperly exercised in the particular proceeding, then the court first shall hear and determine such matters. The court's order thereon is appealable, and an appeal may be taken therefrom by either party within thirty (30) days after the entry of such order, but not thereafter unless the court, on good cause shown, shall extend the time for taking such appeal. However, no appeal shall stay the further proceedings herein described unless the appeal is taken by the petitioner, or unless an order staying which further proceedings shall be entered either by the trial court or by the court to which such appeal is taken.

(3) **Preliminary findings**: If the foregoing matters are determined in favor of the petitioner and further proceedings are not stayed, or if further proceedings are stayed and the appeal results in a determination in favor of petitioner, then the court shall hear the issues raised by the petitioner’s motion for taking. If the court finds that reasonable necessity exists for taking the property in the manner requested in the motion, the court then shall hear such evidence as it may consider necessary and proper for a preliminary finding of just compensation; and in its discretion, the court may appoint three (3) competent and disinterested appraisers as agents of the court to evaluate the property to which the motion relates and to report their conclusions to the court; and their fees shall a paid by the petitioner. The court then shall make a preliminary finding of the amount constituting just compensation.

(4) **Finding as evidence**: Such preliminary finding of just compensation, and any deposit made or security provided pursuant hereto, shall not be evidence in the further proceedings to ascertain finally the just compensation to be paid, and shall not be disclosed in any manner to a jury impaneled in such proceedings; and if appraisers have been appointed as herein authorized, their report shall not be evidence in such further proceedings, but the appraisers may be called as witnesses by the parties to the proceedings.

12.206 <u>Deposit and order of taking</u> ---

(1) **Deposit**: If the petitioner deposits with the County Treasurer money in the amount preliminarily found by the court to be just compensation, the court shall enter an order of testing, vesting in the petitioner the fee simple title (or such lesser estate, interest or easement, as may be required) to the property, if such vesting has been requested, and has been found necessary by the court, at such date as the court considers proper, fixing a date on which the petitioner is authorized to take possession of and to use the property.

(2) **Hardship**: If, at the request of an interested party and upon his showing of undue hardship or other good cause, the petitioner's authority to take possession of the property is postponed for more than ten (10) days after the date of such vesting of title, or more than fifteen

(15) days after the entry of such order when the order does not vest title in the petitioner, then such party shall pay to the petitioner a reasonable rental for such property, the amount thereof to be determined by the court. A writ of assistance, injunction, or any other appropriate legal process or procedure shall be available to place the petitioner in possession of the property on and after the date fixed by the court for the taking with such possession and the petitioner's proper use of the property.

12.207 Withdrawal of deposit --- At any time after the petitioner has taken possession of the property pursuant to the order of taking, if an appeal has not been and will not be taken from the court's order described in Section 12.205, or if such an appeal has been taken and has been determined in favor of the petitioner, any party interested in the property may apply to the court for authority to withdraw for his own use his share (or any part thereof) of the amount preliminarily found by the court to be just compensation, and deposited by the petitioner in accordance with the provisions of Section 12.206 of this Article, as such share shall have been determined by the court. The court then shall fix a date for hearing on such application, and shall require due notice of such application to be given to each party whose interests would be affected by such withdrawal. After the hearing, the court may authorize the withdrawal requested, or such party thereof as shall be proper, but upon the condition that the party making such withdrawal shall refund to the clerk of the court, upon the entry of a proper court order, any portion of the amount so withdrawn which shall exceed the amount finally ascertained in the proceeding to be just compensation (or damages, costs, expenses, or attorney fees) owing to such party.

12.208 Prejudice --- Neither the petitioner nor any party interested in the property by taking any action authorized by Sections 12.203 through 12.207, inclusive, of this article shall be prejudiced in any way in contesting, in later stages of the proceedings, the amount to be finally ascertained to be just compensation.

12.209 Interest payments --- The petitioner shall pay, in addition to the just compensation finally adjudged in the proceeding, interest at the rate of six percent (6%) per annum pre:

(1) Any excess of the just compensation so finally adjudged, over the amount preliminarily found by the court to be just compensation in accordance with Section 12.205 of this Article from the date on which the parties interested in the property surrendered possession of the property in accordance with the order of taking, to the date of payment of such excess by the petitioner.

(2) Any portion of the amount preliminarily found by the court to be just compensation and deposited by the petitioner to which any interested party is entitled, if such interested party applied for authority to withdraw such portion in accordance with Section 12.207 of this article and upon objection by the petitioner (other than on grounds that an appeal under paragraph (2) of Section 12.205 of this Article is pending or contemplated), such authority was denied; interest to be paid to such party from the date, of the petitioner's deposit to the date of payment to such party.

When interest is allowable as provided herein, no further interest shall be allowed under the provisions of Section 3 of "An Act to Revise the Law, in Relation to the Rate of Interest and to Repeal Certain Acts Therein Named" (Ill. Rev. Stat., Ch. 74, par. 3), approved May 24, 1879, as amended, or any other law.

12.210 Refund of excess of deposit --- If the amount withdrawn from deposit by any interested party under the provision of Section 12.207 of this Article exceeds the amount finally adjudged to be just compensation (or damages, costs, expenses, and attorney fees) due to such party, the court shall order such party to refund such excess to the clerk of the court, and if refund is not made within a reasonable time fixed by the court, shall enter judgment for which excess in favor of the petitioner and against such party.

12.211 Proceedings, dismissal or abandonment --- After the petitioner has taken possession of the property pursuant to the order of taking, the petitioner shall have no right to dismiss the petition, or to abandon the proceeding, as to all or any part of the property so taken, except upon the consent of all parties to the proceeding whose interests would be affected by such dismissal or abandonment.

12.212 Costs --- If, on an appeal taken under the provisions of Section 12.205 of this Article, the petitioner shall be determined not to have the authority to maintain the proceeding as to any property, which is the subject thereof, of if, with the consent of all parties to the proceeding whose interest shall be affected, the petitioner dismisses the petition or abandons the proceedings as to any such property, the trial court then shall enter an order revesting the title to such property in the parties entitled thereto, if the order of taking vested title in the petitioner; requiring the petitioner to deliver possession of such property to the parties entitled to the possession thereof; and making such provisions as shall be just, for the payment of damages arising out of the petitioner's taking and use of such property, and also for costs, expenses, and attorney fees as provided in Section 12.228; and the court may order the clerk of the court to pay such sums to the parties entitled thereto, out of the money deposited by the petitioner in accordance with the provisions of Section 12.206 (1) of this Article.

12.213 - 12.216 (Reserved)

12.217 Construction --- The right to take possession and title prior to the final judgment as prescribed in Section 12.203 to 12.212 of this Article shall be in addition to any other right, power, or authority otherwise conferred by the Constitution and laws of the State of Illinois, and shall not be construed as abrogating, limiting or modifying any such right, power or authority.

12.218 Construction easement --- In any case where a taking is for a construction easement only, any structure which has been removed or taken shall be repaired, re-established or relocated at the option of the landowner when the cost of the action does not exceed the just compensation otherwise payable to the landowner.

12.219 Service - notice --- Service of summons and publication of notice shall be made as in other civil cases.

12.220 Hearing --- Except as provided in Sections 12.205, .12.206, 12.207 and 12.212 of this Article no cause shall be heard earlier than twenty (20) days after service upon defendant or upon due publication against non-residents.

Any number of separate parcels of property, situated in the same county, may be included in one petition, and the compensation for each shall be assessed separately by the same or different juries as the court or judge may direct.

Amendments to the petition, or to any paper or record in the cause, may be permitted whenever necessary to a fair trial and final determination of the question involved.

Should it become necessary at any stage of the proceedings to bring a new party before the court or judge, the court or judge shall have the power to make such rule or order in relation thereto as may be deemed reasonable and proper; and shall also have power to make all necessary rules and orders for notice to parties of the pendency of the proceedings, and to issue all process necessary to the execution of orders and judgments as may be entered.

12.221 <u>Impaneling jury</u> -- The petitioner, and every party interested in the ascertaining of compensation, shall have the same right of challenge of jurors as in other civil cases in the circuit courts.

12.222 <u>Oath of jury</u> - - When the jury shall have been so selected, the court shall cause the following oath to be a ministered to said jury:

You and each of you do solemnly swear that you will well and truly ascertain and report just compensation to the owner (and each owner) of the property which it is sought to take or damage in this case, and to each person therein interested, according to the facts in the case, as the same may be made to appear by the evidence, and that you will truly report such compensation so ascertained; so help you God.

12.223 <u>View of premises - verdict</u> --- Said jury shall, at the request of either party, go upon the land sought to a taken or damaged, in person, and examine the same, and after hearing the proof offered make their report in writing, and the same shall be subject to amendment by the jury, under the direction of the court, so as to clearly set forth and show the compensation ascertained to each person thereto entitled, and the said verdict shall thereupon be recorded provided, that no benefits or advantages which may accrue to lands or property affected shall be set off against or deducted from such compensation, in any case.

12.224 <u>Admissibility of evidence</u> --- Evidence is admissible as to (1) any benefit to the landowner that will result from the public improvement for which the eminent domain proceedings were instituted; (2) any unsafe, unsanitary, substandard or other illegal condition, use or occupancy of the property; (3) the effect of such condition on income from the property; and (4) the reasonable cost of causing the property to be placed in a legal condition, use or occupancy. Such evidence is admissible notwithstanding the absence of any official action taken to require the correction or abatement of any such illegal condition, use or occupancy.

12.225 <u>Special benefits</u> --- In assessing damages or compensation for any taking of property acquisition under the Article, due consideration shall be given to any special benefit that will result to the property owner from any public improvement to be erected on such property. This section shall be applicable to all private property taken or acquired for public use, and shall apply whether damages or compensation are fixed by negotiation, by a court, or by a jury.

12.226 <u>Fair cash market value - appreciation in value caused by public improvement</u> --- Except as to property designated as possessing a special use, the fair cash market value of property in a proceeding in eminent domain shall be the amount of money which a purchaser, willing but not obligated to buy the property, would pay to an owner willing but not obliged to sell in a voluntary sale, which such amount of money shall be determined and ascertained as of the date of filing the petition to condemn. Provided, that in the condemnation of property for a public improvement there shall be excluded from such amount of money any appreciation in value proximately caused by such improvement, and any depreciation in value proximately caused by such improvement. Provided further, that such appreciation or depreciation shall not be excluded where property is condemned for a separate project conceived independently of and subsequent to the original project.

12.227 <u>Reimbursement of costs - attorney's fees - appraisal and engineering fees</u> -- Where the City of Quincy is required by a court to initiate condemnation proceedings for the actual physical taking of real property, the court rendering judgment for the property owner and awarding just compensation for such taking shall determine and award or allow to such property owner, as part of which judgment or award, such further sums, as will in the opinion of the court, reimburse such property owner for his reasonable costs, disbursements and expenses, including reasonable attorney, appraisal and engineering fees actually incurred by the property owner in such proceedings.

12.228 <u>Judgments - jurisdiction to determine rights of parties to compensation - dismissal of petition before entry of judgment</u> ---

(1) If the petitioner is not in possession pursuant to an order entered under the provisions of Section 12.206 of this Article, the judge or court, upon such report, or upon the court's ascertainment and finding of the just compensation where there was no jury, shall proceed to adjudge and make such order as to right and justice shall pertain, ordering that petitioner enter upon such property and the use of the same upon payment of full compensation as ascertained as aforesaid, within a reasonable time to be fixed by the court, and such order, with evidence of such payment, shall constitute complete justification of the taking of such property. Thereupon, the court in the same eminent domain proceeding in which such orders have been made, shall have exclusive jurisdiction to hear and determine all rights in and to such just compensation and shall make findings as to the rights of the parties therein, which shall be paid by the County Treasurer out of the respective awards deposited with him as provided in Section 12.232 of this Article, except where the parties claimant are engaged in litigation in a court having acquired jurisdiction of the parties with respect to their rights in the property condemned prior to the time of filing of the petition to condemn. Appeals may be taken from any findings by the court as to the rights of the parties in and to such compensation paid to the County Treasurer as in other civil cases. If in such case the petitioner shall dismiss said petition before the entry of the order by the court first mentioned in this paragraph (1) or shall fail to make payment of full compensation within the time named in such order, or if the final judgment is that the petitioner cannot acquire the property by condemnation, such court or judge shall, upon application of the defendants to said petition or either of them, make such order in such cause for the payment by the petitioner of all costs, expenses and reasonable attorney fees of such defendant or defendants paid or incurred

by such defendant or defendants in defense of said petition, as upon the hearing of such application shall be right and just, and also for the payment of the taxable costs.

(2) In case the petitioner is in possession pursuant to an order entered under the provisions of Section 12.206 of this Article and if Section 12.212 of this Article is inapplicable, then the court, upon the jury's report, or upon the courts determination of just compensation if there was no jury, shall proceed to enter an order setting forth the amount of just compensation so finally ascertained and ordering and directing the payment of any amount thereof that may remain due to any of the interested parties, directing the return of any excess in the deposit remaining with the clerk of the court, and directing the refund of any excess amount withdrawn from the deposit by any of the interested parties, as the case may be.

12.229 <u>Intervening petition</u> --- Any person not made a party may become such by filing his intervening petition, setting forth that he is the owner or has an interest in property, and which will be taken or damaged by the proposed work; and the rights of such last named petitioner shall thereupon be fully considered and determined.

12.230 <u>Appeals</u> --- Appeals may be taken as in other civil cases.

12.231 <u>Bond - use of premises</u> --- In cases in which compensation shall be ascertained as aforesaid, if the party in whose favor the same is ascertained shall appeal such proceeding, the petitioner shall, not withstanding, have the right to enter upon the use of the property upon entering into bond, with sufficient surety, payable to the party interested in such compensation, conditioned for the payment of such compensation as may be finally adjudged in the case, and in case of appeal by petitioner, petitioner shall enter into like bond with approved surety. Said bonds shall be approved by the judge before whom such proceedings shall be had, and executed and filed within such time as shall be fixed by said judge.

12.232 <u>Payment to County Treasurer for disbursements to parties</u> -- Payment of the final compensation adjudged, including any balance remaining due because of the insufficiency of any deposit made under Section 12.206 of this Article to satisfy in full the amount finally adjudged to be just compensation, may be made in all cases to the County Treasurer, who shall receive and disburse the same subject to order of court as provided in paragraph (1) of Section 12.228 of this Article or payment may be made to the party entitled his, her, or their conservator or guardian.

12.233 <u>Distribution of compensation - contract for deed</u> --- The amount of just compensation shall be distributed among all persons having an interest in the property according to the face value of their legal or equitable interests. If there is a contract for deed to the property, the contract shall be abrogated and the amount of just compensation distributed by allowing to the purchaser on the contract for deed (a) an amount equal to the down payment on the contract, (b) an amount equal to the monthly payments made on the contract, less interest and an amount equal to the fair rental value of the property for the period the purchases has enjoyed the use of the property under the contract, and (c) an amount equal to amounts expended on improvements to the extent the expenditures increased the fair market value of the property, and by allowing to the seller on the contract for deed the amount of just compensation after allowing for amounts distributed under (a), (b) and (c) of this section. However, the contract purchaser may pay to the

contract seller, the amount to be paid on such contract, and shall then be entitled to the amount of just compensation paid by the condemnor either through negotiation or awarded in judicial proceedings.

12.234 Judgment entered --- The court or judge shall cause the verdict of the jury and the judgment of the court to be entered upon the records of said court.

12.235 Repeal --- All laws and parts of laws in conflict with the provision of this Article are hereby repealed. Provided, that this Article shall not be construed to repeal any law or part of law upon the same subject passed by this General Assembly; but in all such cases this Article shall be construed as providing a cumulative remedy.

CHAPTER 13

ADMINISTRATIVE AND OTHER PROVISIONS RELATING TO THE CITY

ARTICLE I OFFICERS AND EMPLOYEES

ARTICLE II PERSONNEL CODE

ARTICLE III HOUSE NUMBERING

ARTICLE IV CITY MARKET AND GARAGE

ARTICLE V DOCKS AND HARBORS

ARTICLE VI REGULATIONS CONCERNING OPERATION OF BOATS

ARTICLE VII SUBDIVISIONS

ARTICLE VIII CEMETERY AND CITY VAULTS

ARTICLE IX OTHER REGULATIONS

ARTICLE X MUNICIPAL PARKING LOTS

ARTICLE XI WATER AND SEWER EXTENSIONS

ARTICLE XII RIGHT OF ENTRY

ARTICLE XIII IMPASSE RESOLUTION

ARTICLE XIV ISSUANCE OF ANTI-POLLUTION BONDS AND INDUSTRIAL BONDS

ARTICLE XV ETHICS

ARTICLE XVI PURCHASING - BIDDING

ARTICLE XVII BUDGET SYSTEM

ARTICLE I OFFICERS AND EMPLOYEES

Section 13.101 Effect --- The provisions of this Article shall apply alike to all officers and employees of the city regardless of the time of the creation of the office or of the time of the appointment of the officer.

13.102 Appointment --- The Mayor, by and with the advice and consent of the Council, shall make appointments to fill all appointive offices. Employees shall be selected by the Mayor.

13.103 Term of office - vacancies --- Every appointive officer or employee of the city shall hold office for a term of one year or until his successor is appointed and qualified unless it is otherwise provided by ordinance. Employees selected shall serve so long as their services are desired. In case of a vacancy in any such office, it shall be filled in the same manner as the original appointment was made.

13.104 Beginning term --- Officers of the city elected at a regular election shall take office on the first Monday in May following their election; provided that officers elected at special meeting to fill vacancies shall qualify and take office as soon as possible after their election.

13.105 Salary payments --- The salaries and pay of all elective City Officers and employees shall be paid on the first and sixteenth of each and every month to each person entitled thereto, and the salaries and pay of all appointive officers in the employ of the city and the wages of day laborers employed by the city shall be paid on the first and sixteenth days of each and every month. All salaries and wages of officers and employees of the city shall be paid only upon payrolls duly certified to by the respective heads of departments and boards of the city after such payrolls have been approved by the auditing committee of the City Council and have been ordered by the City Council to be paid.

13.106 Office hours --- The offices of the various city officials, except the Police Department, Fire Department and City Jail, shall be open every day for business except Saturdays, Sundays, and legal holidays from 8:30 a.m. to 4:30 p.m. and a day's work for the employees of such office shall be seven (7) hours; provided, however, that any city official may direct the employees of his office or department to work additional hours without additional compensation when in his judgment the need arises.

13.107 Assignment of duties --- The Mayor shall have the power to assign to any appointive officer any duty which is not assigned by ordinance to some other specific officer; and shall determine disputes or questions arising or relating to the respective powers or duties of officers.

13.108 Records --- All records kept by an officer of the city shall be open to inspection by the Mayor or any member of the Council at all reasonable times whether such records are required to be kept by statute or ordinance.

13.109 Monies received --- Every officer of the city shall at least once each month turn over all moneys received by him in his official capacity to the Treasurer with a statement to the Comptroller showing the source from which the same was received.

13.110 - 13.111 (Reserved)

13.112 Oath --- Every officer of the city shall, before entering upon the duties of his office, take the oath prescribed by statute.

13.113 Bond --- Every officer and employee shall, if required by the Council, before entering upon the duties of his office, give a bond in such amount as may be determined by the Council and with such corporate sureties as it may approve conditioned upon the faithful performance of the duties of his office or position.

13.114 Salaries --- All officers and employees of the city shall receive such salaries as may be provided from time to time by ordinance. No officer or employee of the city receiving a salary from the city shall be entitled to retain any portion of any fees collected by him in the performance of his duties as municipal officer or employee in the absence of a specific ordinance provision to that effect.

13.115 Arrests --- The Mayor, members of the City Council, members of the Fire Department, as well as every member of the Police Department, are hereby declared to be "Conservators Of The Peace".

13.116 Termination of office --- Every officer of the city, upon the termination of his office for any cause whatsoever, shall deliver to his successor all books and records which maybe the property of the city; and if no successor has been appointed within one week after the termination of office, such property shall be delivered to the City Clerk or Treasurer.

13.117 Impersonation --- It shall be unlawful for any person to impersonate without lawful authority any city officer or employee. Any person violating this section shall be fined as provided in Chapter 32.

13.118 Interfering with officers --- It shall be unlawful to interfere with or hinder any officer or employee of the city while engaged in the duties of his office. Any person, firm or corporation violating any of the provisions of this section shall be fined as provided in Chapter 32.

13.119 Vacations --- Except as provided for in union contract, full time employees and appointed officials of the municipality shall receive annual vacation periods with full pay which annual vacation periods shall be allowed each such employee or officer on the following basis:

> One (1) week vacation for those who have served the municipality for a period of one (1) year prior to July 31st of the year in which the vacation is to occur, and two (2) weeks vacation for such employees or officers whose service has continued for two (2) years or more prior to such date.

For the purpose of construction of this section, "full time employees" shall mean all employees who are not on an hourly basis and all of those on an hourly basis who have worked one thousand eight hundred fifty (1,850) hours in the previous year. The head of each department may designate by rule the time when each employee under his supervision may take a vacation, except that in the case of the uniformed departments, the Board of Fire and Police Commissioners may establish such additional rules not in conflict herewith as they shall see fit; the time at which heads of departments or, appointed officials may pick their vacations shall be designated by the Mayor.

The above designated vacation periods shall not be considered accumulative and no vacation with pay shall be allowed in any year in excess of the periods above established.

13.120 <u>Legal representation for employees</u> -- - Any officer, employee, or member of a board or commission of the city named as defendant in any civil lawsuit resulting from his or her actions in his or her course of employment for the city shall be furnished legal counsel by the City Council to defend such action and an officer, employee or member of a board or commission of the city shall be reimbursed for any judgment, paid by him or her as a result of the filing of such a suit; provided however, if the Council determines that said officer, employee or member of a board or commission of the city was guilty of willful and deliberate misconduct or was guilty of violating any state or federal criminal laws, then the Council may deny the furnishing of legal counsel and may refuse to reimburse the officer, employee or member of a board or commission for any judgment rendered against him or her.

13.121 <u>Employment of city residents</u> --- At least 50% of all of a contractor's employees working on any construction project involving the use of city funds shall be residents of Adams County, Illinois, unless this requirement shall be waived by the Quincy City Council, and all construction contracts involving the use of city funds, entered into between the city and a contractor's, shall so provide. Any contractor found to be in violation of the provision of this ordinance shall, in addition to other penalties prescribed, be barred from bidding upon construction projects using City funds for a period of two (2) years.

13.122 <u>Prevailing wage certificate</u> --- All contracts for public works for which the prevailing wage rate is required to be paid by law, and which are funded and paid for from funds of the City of Quincy, shall include a provision requiring such contractors to provide to the City such documentation and information as may be required by the City to verify compliance with said prevailing wage laws, including by way of example, but not necessarily limited to dates and times during which employees of the contractor were employed for the project, as well as, certified statements of payroll (as required by the Illinois Department of Labor) of all employees that perform work on such projects.

And contractor failing to provide the information and records in accordance with this ordinance, may in addition to such other penalties as may be prescribed by contract or, by law, be barred from bidding upon construction projects using City funds for a period of two years and may be subject to penalty as provided and as set forth in Chapter 32 of this code.

13.123 - 13.126 (Reserved)

13.127 <u>Residency - employees and officers</u> ---

(1) **Generally**: All officers and employees shall be residents of the City of Quincy and each such officer or employee shall maintain his or her bonafide place of residence within corporate boundaries of the City of Quincy during the term of employment. "Bonafide place of residence", as used herein shall mean domicile or the place where the officer or employee lives and has his or her true, permanent home, and to which, whenever the officer or employee is absent, he or she has an intention of returning. Notwithstanding the foregoing, after the effective date of this ordinance, any non-resident applicant for employment may be appointed or employed by the City subject to the condition or requirement that such officer or employee establish and maintain his or her residence within the corporate boundaries of the city, as required herein within six (6) months of the effective date of appointment or employment by the city. Failure to comply with the requirements of this ordinance shall be deemed good, just or sufficient cause for discharge or termination of employment of said officer or employee.

(2) **Exemptions**: Notwithstanding the foregoing, employees of the City of Quincy employed at the Quincy Municipal Airport or the municipal landfill shall not be required to establish or maintain their residence as required by this section as long as said employee shall be principally and primarily employed at either of said locations. Such employees, however, shall maintain their bonafide place of residence (as defined above) within the corporate boundaries of Adams County Illinois, and not outside of radius of fifteen (15) miles from the respective place of employment.

ARTICLE II PERSONNEL CODE

Section 13.201 <u>Title</u> --- This article may be referred to as the Personnel Code of the City of Quincy.

Division 1
Administration of Personnel Code - Personnel Committee

13.202 <u>City Council</u> --- The City Council has adopted this personnel code as its personnel administration system. The City Council reserves the right to revoke or amend the personnel code at any time, in whole or part. Any actions taken pursuant to the personnel code may also be revoked or amended by the City Council.

13.203 <u>Personnel Committee</u> ---

(1) **Creation**: There is hereby created and established the Personnel Committee of the City Council.

(2) **Membership**:

(a) **Generally**: The Personnel Committee shall consist of four (4) aldermen, two (2) from each of the two (2) political parties most represented on the City Council. Political party affiliation will be conclusively based on such affiliation when the alderman was lasted elected as alderman. The alderman of each political party shall appoint two (2) members from their respective party and those members shall serve at the pleasure of their party. Members may be reappointed to serve on the committee from time to time.

(b) **Ex-Officio members**: The Director of Administrative Services and the Director of Public Works shall serve as ex-officio, nonvoting members of the Personnel Committee. They shall assist the Personnel Committee in the performance of its duties.

(c) **Terms**: The members of the Personnel Committee who are aldermen of the City of Quincy shall be appointed for terms of two (2) years. All terms shall be based on years which commence at the first regular meeting of the City Council in May and end at the first regular meeting of the City Council in May two (2) years thereafter, provided that initial appointments shall end on the first Monday of May, 19_

(d) **Vacancies**: All vacancies occurring in the Personnel Committee shall be filled by appointment in the same manner as original appointments. Vacancies shall be filled to complete only the unexpired term of the member in whose position the vacancy is created.

(e) **Continuation in office**: In the event of a vacancy or the expiration of a term, the member then holding office shall continue as a member while an alderman until is or her successor is appointed.

(f) **Compensation**: All members of the Personnel Committee shall serve without additional compensation for such services, provided that this shall not be construed to limit an alderman's right to receive compensation for his or her services as an alderman or to limit the Director of Administrative Services right to receive compensation for his or her services as Director of Administrative Services, and provided further that members shall be entitled to reimbursement for any actual and reasonable out-of-pocket expenditures incurred in connection with the duly authorized business of the committee.

(g) **Conflicts**: No member of the Personnel Committee shall use his or her membership for any personal advantage or gain or for the advantage or gain of any person, firm or corporation with whom or with which the member is associated, directly or indirectly.

(3) **Organization**:

(a) **Chairman**: A member of the Personnel Committee shall be designated by the Mayor as its chairman. Once designated, the chairman shall continue to serve in such capacity at the pleasure of the Mayor until the appointment of a new chairman or until the termination of such member's term. The removal of a chairman shall not result in the removal of the alderman as a committee member unless the term of the member has ended. In the temporary absence of the chairman, the members of the committee may designate an acting chairman to serve in the chairman's absence. The Director of Administrative Services shall serve as the Ex-Officio Secretary of the committee.

(b) **Rules**: The Personnel Committee may adopt such rules for the conduct of its business as it may deem necessary or desirable, consistent with this personnel code and other applicable ordinances and resolutions of the City of Quincy.

(c) **Meetings**: The Personnel Committee shall meet regularly and at such time and place as it may determine. Special meetings as are necessary or desirable may be called by the Mayor, the chairman of the committee, by any two (2) members of the committee or by the Director of Administrative Services. At least 24 hours notice of any special meeting shall be given unless such notice is waived by all members of the committee.

(4) **Powers and duties**: The Personnel Committee shall have the powers and duties set forth in this section and such other powers and duties as the Mayor and City Council may hereafter determine. In no event shall the committee have the power to make expenditures or contracts for services or materials except as specifically provided for herein or as otherwise authorized by the City Council. The powers and duties of the personnel committee shall be as follows:

(a) To make recommendations to the Mayor and City Council relative to any matters pertaining to the personnel code or personnel of the City of Quincy.

(b) To advise the Mayor and the City Council in the administration of the personnel code and personnel related matters, including, but not limited to, creation and establishment of job description or classifications, salary or wage schedules, and other matters relating to employee benefits. The City Council may by separate resolution, approve such recommendations of the Personnel Committee including establishment of job descriptions or classifications, and salary or wage schedules.

(c) To perform such other acts as are prescribed in the personnel code or may be necessary or desirable to accomplish any or all of the foregoing.

13.204 - 13.210 (Reserved)

Division 2
General Provisions

13.211 The purposes of the personnel policy are to establish for the City of Quincy a comprehensive system of personnel administration; to establish guidelines relative to personnel administration; to coordinate personnel administration; to assist officers and employees to better understand working conditions; to help officers and employees to improve their competence in

the performance of their duties; and to serve as the basis for decision making by those involved in the administration of personnel for or on behalf of the City of Quincy.

13.212 <u>Coverage</u> --- All offices and positions of employment in the service of the City of Quincy shall be subject to the provisions of the personnel policy, unless specifically exempted in whole or in part under its provision. It is intended that these provisions shall apply regardless of the time of the creation of the office or position or the time of appointment or employment.

13.213 <u>Exemptions</u> ---

(l) **Complete exemption**: All officers or officials of the City of Quincy elected by the voters of the city shall be completely exempt from the coverage of the personnel policy. Nevertheless, to the extent necessary to maintain consistency in city operations, the policies herein established shall govern the city's dealing with even elected officials. For example, pay periods established in the personnel policy will apply to elected official.

(2) **Partial exemptions**: Except as otherwise specifically provided for in the personnel policy, the following positions or categories of employment in the service of the City of Quincy shall be exempt from its coverage:

(a) All positions subject to a written agreement with the City of Quincy, including, but not necessarily limited to collective bargaining agreements:

1.) This exemption shall not, however, apply to the chiefs, deputy chiefs and lieutenants of the Police Department and the chief, the deputy chief, the fire marshal and training chief of the Fire Department (herein "police and fire administrators") and accordingly, said officers shall be subject the provisions of the personnel policy of the City of Quincy notwithstanding any other provision of contract.

(b) All part-time, seasonal, or temporary positions.

(c) All members of the legal department of the City of Quincy.

(d) All officers or employees governed by the Board of Fire and Police Commissioners:

1.) This exemption shall not however, apply to the chiefs, deputy chiefs and lieutenants of the Police Department and the chief and deputy chief of the Fire Department (herein "police and fire administrators") and accordingly, said officers shall be subject to the provisions of the personnel policy of the City of Quincy notwithstanding any other provision or contract (except as to the Board of Fire and Police Commissioners jurisdiction to appoint, promote, discipline, suspend or discharge as; provided in Chapter 11 of this Code.)

(e) All officers or employees governed by the Public Library Board.

(3) **Defined exemptions**: In the event it shall be unclear whether any position or category of employment is or is not subject to the personnel policy or the extent of coverage, determination shall be made by the Mayor.

13.214 <u>Coverage - police and fire administrators</u> --- Except as otherwise provided herein, the police and fire administrators, as described in Section 13.213(a)(1) above, shall generally receive the same non salary benefits, on the same terms and conditions as provided to other sworn officers of their respective departments in accordance with any applicable collective bargaining agreement covering sworn officers (other than police and fire administrators).

(1) **Exceptions**:

(a) **Overtime**: The police and fire administrators shall not be entitled to accumulate or accrue overtime or compensatory time compensation, said officers being deemed to be professional and administrative officers exempt under the Federal Fair Labor Standards Act from entitlement to overtime compensation or benefits.

(b) **Sick time**: Said police and fire administrators shall, notwithstanding any other provision to the contrary, be entitled to accumulate no more than ninety (90) days sick time.

(2) **Future contracts - benefits** --- In the event the benefits provided to sworn officers of the respective departments are changed or modified, as a result of a collective bargaining agreement made or entered into after the effective date of this ordinance, then the benefits for the police and fire administrators, will be changed or modified to conform to such bargaining unit provisions (subject to the restrictions provided in subsection 13.212(1) above), unless, within sixty (60) days of the effective date of any such collective bargaining agreement, the City Council, elects not to implement such changes for police and fire administrators. The provision shall not apply however, to the benefit restrictions described in subparagraphs (a) and (b) above.

Division 3
General Policies

13.215 <u>Personnel records</u> --- In order to facilitate the administration of this personnel policy and city operations, personnel records shall be kept on all personnel as may be approved or required by the Mayor or applicable laws, rules, or regulations. Records shall be centrally kept and maintained for all personnel (whether or not otherwise subject to these personnel polices) by a person or persons designated by the Mayor.

13.216 <u>Employee loyalty</u> --- All personnel of the City of Quincy owe a duty of loyalty to the interests of the City of Quincy. No personnel shall be interested, directly or indirectly, in any form, fashion, or manner, as partner, officer, director, stockholder, advisor, consultant, employee, or in any other form or capacity in any business, concern or matter which conflicts with such duty of loyalty.

13.217 <u>Medical examinations</u> ---

(1) **New employees**: The City of Quincy may require all new officers or employees to submit evidence of physical fitness to perform duties assigned and freedom from communicable diseases, including, but not limited to, tuberculosis. Such evidence shall consist of a physical examination, any tuberculin skin test, and/or, if appropriate, a x-ray made by a physician selected by the city who is licensed in any state to practice medicine and surgery in all its branches. The cost of such examination shall be paid by the city.

(2) **Required examinations**: The City of Quincy may, from time to time, require the examination of any officer or employee by a physician so selected by the City of Quincy licensed in the State of Illinois to practice medicine and surgery in all its branches. Such examination may include a physical or mental examination. The City of Quincy shall pay the expenses of any such examination to the extent not paid for by insurance provided by the City of Quincy.

13.218 <u>Payroll deductions</u> ---

(1) **Required deductions**: Deductions or withholdings shall be made from salary or

wages as required by law

(2) **Voluntary deductions**:

(a) **Generally**: Voluntary deductions may be made from salary or wages upon the written request of any officer or employee if approved by the Mayor. Such approval may be individual or by general category. The purposes of such deductions shall be approved by the Mayor.

(b) **Authorized deductions**: The Mayor specifically allows the following voluntary deductions to be made:

1.) Voluntary deductions may be made for dependent coverage under the group health insurance offered by the city to its employees;

2.) Voluntary deductions may be made for United States savings bonds;

3.) Voluntary deductions may be made for the credit union of and for city employees:

4.) Voluntary deductions may be made for the United Fund or United Way. For purposes hereof, "United Fund" or "United Way" means the organization conducting the single, annual, consolidated effort to secure funds for distribution to agencies engaged in charitable and public health, welfare, and service purposes, which is commonly known as the United Fund or United Way, or the organization which serves in place of the United Fund or United Way organization.

13.219 (Reserved)

13.220 <u>Equal opportunity</u> --- The City of Quincy is committed to both the concept of excellence and equal opportunity in fulfilling its municipal and other functions. The Mayor, the City Council, and the City of Quincy hereby espouse their commitment to the position that equal opportunity enhances the excellence of the City of Quincy by facilitating the optimal utilization and development of available human resources.

13.221 <u>Non-discrimination</u> --- No officer of employee of the City of Quincy shall engage in discrimination or harassment of any other officer or employee on account of race, color, religion, sex, age, economic status, national origin, handicap, political affiliation or other proscribed classification. Discrimination or harassment prohibited shall constitute grounds for immediate dismissal.

13.222 <u>Policy</u> --- The City of Quincy establishes the policy of determining the terms, conditions, and privileges of employment (including, but not limited to, recruitment, selection, placement, testing, systems of transfer, promotion, and benefits) without regard to race, color, religion, sex, age, economic status, national origin, handicap, political affiliation, or other prescribed consideration.

13.223 <u>Affirmative action</u> ---

(1) **Generally**: The City of Quincy has an unwavering commitment to equal opportunity. However, the Mayor and City Council are aware that adverse impacts are not an inconceivable outcome of the most scrupulously guarded non-discriminatory policies and procedures. Therefore, upon identification or such "affected classes" as may be included in employment or

other area, the Mayor and personnel of the City of Quincy shall undertake vigorous affirmative action and/or voluntary action to redress institutional practices which have adverse impact on "affected classes," as that term has been defined in applicable federal and state statutes, regulations, and orders.

(2) **Plan**: The Mayor shall prepare, administer, and interpret an affirmative action plan consistent with all applicable federal and state statutes, regulations and orders.

13.224 <u>Other plans</u> --- In the event that compliance with any applicable federal and state statutes, regulations, and orders requires that the City of Quincy adopt any plans, policies, or procedures regarding equal opportunity or offer matters other than an affirmative action plan provided for in the preceding section, the Mayor shall be authorized and empowered to prepare, administer, and interpret any such plan, policies, or procedures.

Division 4
General Working Conditions

13.225 <u>Compensation</u> ---

(1) **Establishment**: The wages, salaries or other compensation paid to the various officers and employees of the City of Quincy shall be established by the City of Quincy through it appropriation ordinance or other ordinance authorizing expenditures consistent with this personnel policy.

(2) **Overtime**:

(a) **Generally**: Officers and employees in a supervisory III and above category, administrative and professional job classifications shall not be paid overtime accept as otherwise required by the Fair Labor Standard Act.

(b) **Definition**: Overtime is time worked in excess of forty (40) hours as established in the Fair Labor Standards Act

(c) **Circumstances in which overtime may be authorized**: Overtime may be authorized only when it is not possible to adjust staffing patterns and/or employee work schedules to provide essential staffing in the following types of circumstances:

1.) Emergency circumstances, that is, circumstances when there are adverse circumstances of a temporary nature which reduce normal staffing or increase staffing requirements. Examples include the unexpected absence of an employee whose position must be filled to avoid a disruption of necessary services; the necessity to immediately perform an unexpected heavier than normal volume of work to avoid disruption of necessary services or to meet a critical deadline; and, situations which are uncontrollable, such as heavy snowstorms, disruption of utilities, or flooding.

2.) Non-emergency circumstances, that is, circumstances when there are situations in which overtime work is considered to be the best way to make necessary staff available to handle a particular situation. Examples include to provide essential staffing where vacancies exist in a department because of the unavailability of qualified applicants; to perform an unusually heavy volume of work of a temporary nature; and, to perform work which cannot be performed during normal working hours without disrupting necessary activities or services.

(d) **Conferences**: Any employee required to attend conferences, schools, or meetings will not be paid overtime nor receive compensatory time for such attendance.

(e) **Authorization of overtime work:**

1.) For those positions approved by the Mayor and designated on lists maintained by each superintendent or department head, authorized work in excess of any approved work schedule shall be overtime.

2.) A superintendent or department head, or designated representative, may authorize overtime work in emergency situations.

3.) In non-emergency situations, overtime work must be authorized in advance by the superintendent or department head. Before authorizing overtime, the superintendent or department head must review the circumstances and be convinced that overtime constitutes the best means of handling the situation.

(f) **Payment for overtime work**:

1.) An employee will receive one and one-half (1 1/2) times the regular rate of pay for each full quarter-hour worked in excess of forty (40) hours per week.

2.) Only time in excess of forty hours worked in a weekly pay period will be considered as hours actually worked in determining eligibility for overtime payment.

3.) During a week in which an employee receives holiday pay, the number of holiday hours for which the employee is paid will be considered as hours actually worked in determining eligibility for overtime payment.

(g) **Distribution of overtime among employees**: To the extent feasible, overtime will be distributed equally among employees of the same job category and job title in a department who are willing to work overtime, provided the employees concerned are equally capable of performing the duties required in the judgment of the superintendent or department head.

(3) **Payment**: The wages, salaries, and other compensation of all officers and employees of the City of Quincy shall be paid on weekly or biweekly basis unless other payment schedules have been specifically approved by the Mayor. All compensation shall be paid only upon payrolls duly certified to by the respective heads of departments and boards of the city and after such payrolls have further been approved by the auditing committee of the City Council and have been ordered by the City Council to be paid.

13.226 <u>Workday</u> ---

(1) **Generally**: City hall will be open for business from 8:00 a.m. to 4:30 p.m., every day, except Saturdays, Sundays, and city holidays.

(2) **Variances in normal workday**: The normal workday for any individual employee may be varied as necessary by the employee's supervisor. For example, all offices in City Hall are to remain open during the entire normal workday. Therefore, the superintendent or department head in charge of each office may adjust staffing patterns to accomplish this. Additionally, the hours of operation of city-owned or city-operated facilities other than City Hall may be determined by the Mayor, upon recommendation of the appropriate superintendent or department head, the Mayor may determine work schedules for such facilities. In no event, however, shall the workday be less than seven (7) hours or work week be less than thirty-five (35) hours.

13.227 <u>Lunch period</u> --- The length and scheduling of lunch periods shall be determined by the superintendent or department head, except that in no instance shall a lunch period exceed one (1) hour. The lunch period is intended for the officer or employee to leave the employee's work

station and return ready to resume work within the time designated by the superintendent or department head.

13.228 <u>Rest break</u> --- An officer or employee shall be entitled to two (2) fifteen (15) minute rest breaks each work day, one (1) in each half of the employee's work day. A rest break is intended for an employee to leave the employee's work station and return ready to resume work within the fifteen (15) minutes.

13.229 <u>Miscellaneous obligations</u> ---

(1) **Training sessions**: Officers and employees may be requested to periodically attend training sessions, conferences, and workshops in relation to their position or employment. Such sessions are considered a condition of employment.

(2) **Health**: All officers and employees are expected to maintain proper personal health and safety practices, as well as presenting an appropriate appearance as officers or employees of the city.

(3) **Telephones**: Telephones are intended to be used for city business only. Personal calls may be made only when absolutely necessary. Long distance for personal reasons may never be charged to the city's account.

Division 5
Holidays, Leaves, Vacations, and Other Fringe Benefits

13.235 <u>General provisions</u> --- The City of Quincy has determined that the best interests of the city, as well as its officers and employees, require that certain fringe benefits be provided. Those fringe benefits are set forth in the following provisions. The City of Quincy reserves the right, at any time, to revoke, modify, or amend any such fringe benefits, provided that any benefits theretofore approved shall not be forfeited.

13.236 <u>Holidays</u> ---

(1) **Generally**: It is the policy of the City of Quincy to grant qualifying officers and employees twelve (12) paid holidays each calendar year. The specific holidays shall a designated annually by the Mayor.

(2) **Definition**: A holiday is a day off from work with pay.

(3) **Holiday eligibility**:

(a) **Generally**: To be eligible for holiday pay, an individual must have been employed by the city for at least thirty (30) working days and worked the last day or period scheduled for that individual prior to the holiday and the first work day or period scheduled for the individual after the holiday.

(b) **Paid leave**: An officer or employee who is on a paid leave of absence will be eligible for holiday pay for a designated holiday observed during the leave of absence The holiday shall not count against available leave. An individual shall not receive both leave pay and holiday pay.

(c) **Unpaid leave**: An officer or employee who is on an unpaid leave of absence will not be eligible for holiday pay for a designated holiday observed during the leave of absence.

(d) **Vacation**: An officer or employee who is on vacation will be eligible for

additional time off with pay equal to the holiday time off for which the officer or employee is eligible.

(4) **Working on a holiday**:

(a) **Requirement**: Under certain circumstances, an individual may be required to work on holidays. Circumstances requiring work on holidays shall be determined by the appropriate superintendent or department head.

(b) **Forfeiting holiday**: An officer or employee scheduled to work on a designated holiday who does not report for work and is not excused will forfeit the holiday.

(c) **Holiday pay**: An officer or employee who is not scheduled to work on a holiday or is called in to work on a scheduled day off when a holiday is observed will be paid at the rate of one and one-half (1 1/2) times the individual's hourly rate or, at the request of the employee, may be granted compensatory time off with pay at regular time, either before or after the holiday. No additional pay shall be paid to supervisors, department heads, or superintendents without the specific approval of the Mayor.

(d) **Floating holiday**: For an officer or employee whose holidays are considered “floating holiday”, up to one (1) year of the individual’s holiday hours may be carried over into the next calendar year, but must be used before the end of that year.

(e) **Exemption**: For those officers or employees working in a department where collective bargaining agreements exist, but such officer or employee is not covered by such agreement, the holiday schedule shall be the same as the collective bargaining agreement.

13.237 <u>Leaves of absence</u> ---

(1) **Sick leave**:

(a) **Generally**: It is the policy of the City of Quincy to grant sick leave with pay to a qualifying officer or employee.

(b) **Definition**: Sick leave is leave with pay granted for the purpose described below in this section. Personal illness may include, but shall not be limited to, pregnancy, giving birth or recovery therefrom. Personal illness shall not include any personal illness which is the direct or indirect result from the use of alcoholic beverages, drugs not prescribed for such employee by a physician, or any unlawful substance.

(c) **Sick leave accumulation**:

1.) All officers and employees shall accumulate sick leave at the rate of twelve (12) working days per calendar year.

2.) Sick leave shall accumulate at the rate of one (1) day per calendar month.

3.) Sick leave for a new officer or employee shall start accumulating on the first day of the month following the individual's starting work date.

4.) Sick leave for each month shall be credited to an officer or employee on the first day of each month.

5.) Unused sick leave shall accumulate up to a maximum of sixty (60) working days.

6.) At the end of each calendar year, officers or employees who have accumulated in excess of sixty (60) days will be paid the excess days at their current rate for all excess hours.

(d) **Sick leave eligibility**:

1.) A physician's, dentist's, osteopath's, or chiropractor's certificate, or if the treatment is by prayer or spiritual means, that of a spiritual advisor or practitioner of such person's faith, will be required as a basis for pay during the leave after an absence of three (3) consecutive days for personal illness. This provision shall not limit the right to inquire evidence of physical fitness.

2.) An officer or employee promoted, demoted, or transferred to a position having a different sick leave allowance will begin accruing sick leave on the basis of sick leave allowance for the new position.

3.) A part-time or temporary employee changed to a full-time status, or vice versa, will begin or cease accruing sick leave on the basis of the new status.

(e) **Use of sick leave**: Sick leave may be used for the following purposes:

1.) Illness, disability, or injury of an officer or employee which renders the officer or employee incapable of performing a substantial portion of assigned duties.

2.) An officer's or employees illness which may be contagious to other officers or employees.

3.) Quarantine at home.

4.) An appointment with a duly licensed physician, dentist, osteopath, chiropractor, or a spiritual advisor or practitioner of one's faith who is contacted to relieve the condition for which sick leave is taken.

5.) Serious illness, disability, or injury of a member of the officer's or employee's immediate family. For this purpose, immediate family is a spouse and child of an individual residing with that individual. Sick leave for this purpose may be used for not more than six (6) days in a calendar year.

6.) Sick leave may not be used in increments of less than one (1) hour at a time.

7.) Employees may use up to two (2) days of their sick leave to take care of their family, living in the employee's home.

8.) In the case of loss time due to an injury or illness in the course of employment, an employee may utilize and apply his regular sick leave and/or vacation (13) hours a week to supplement any payments he may receive from the workmen’s compensation carrier during the period of said disability. In no case will the total compensation exceed 100% of the employee's normal daily salary.

(f) **Termination of sick leave**:

1.) Any unused sick leave credit standing to the employee's account shall be paid at the employee's current rate for one-half (1/2) the unused hours to the employee upon termination. Any unused sick leave credit standing to the employee's account upon his death shall be paid at full pay rate to the employee's estate in a lump sum.

2.) Officers or employees who voluntarily terminate their services must give at least two (2) week's written notice to the superintendent or department head to be paid for unused sick leave, provided that the payment of sick leave may be deferred for up to thirty (30) days after notice is received. A superintendent or department head who receives a termination notice shall promptly notify the Mayor or his designee.

(g) **Sick leave for current officers and employees**: An officer or employee who has not accumulated sick leave prior to the implementation of the personnel policy shall be given

sick leave as follows:

1.) An officer or employee who has been a full-time employee a minimum of one (1) year of continuous employment prior to the implementation of this personnel policy shall be given six (6) days.

2.) An officer or employee who has been a full-time employee less than one (1) year of continuous employment prior to the implementation of this personnel policy shall be given the number of sick leave days the officer or employee would have earned and this personnel policy been in effect when the officer or employee was hired.

(h) **Workmen's compensation**: In case of loss of time due to an injury arising out of and in the course of employment, an employee may utilize and apply accumulated sick leave to supplement any payments received from the workmen's compensation carrier during the period of said disability. An employee may use regular sick leave in a like manner if all major illness leave has been used. In no case will the total compensation exceed one hundred percent (100%) of the officer's or employee's normal daily salary. The benefits hereunder shall abate.

(2) **Major illness leave**:

(a) **Generally**: It is the policy of the City of Quincy to grant major illness leave with pay to qualifying officers or employees.

(b) **Definition**: Major illness leave is leave with pay granted an officer or employee who is hospitalized or seriously ill because of an accident or personal illness.

(c) **Major illness leave accumulation**:

1.) All officers and employees shall accumulate major illness leave at the rate of twelve (12) working days per calendar year.

2.) Major illness leave shall accumulate at the rate of one (1) day per calendar month.

3.) Major illness leave for new officer or employee shall start accumulating on the first day of the month following the individual's starting work date.

4.) Major illness leave for each month shall be credited to an officer or employee on the first day of each month.

5.) Unused major illness leave shall accumulate up to a maximum of one hundred and twenty (120) working days.

6.) An officer or employee promoted, demoted, or transferred to a position having a different major illness leave allowance will begin accruing major illness leave on the basis of the major illness leave allowance for the new position.

7.) A part-time or temporary employee changed to full-time status, or vice versa, will begin or cease accruing major illness leave on the basis of the new status

(d) **Eligibility for major illness leave**: To be eligible for major illness leave, an officer or employee must provide to the superintendent or department head a physician's, dentist's, osteopath's, or chiropractor's certificate or, if the treatment is by prayer or spiritual means, that of a spiritua1 advisor or practitioner of such person's faith, that such illness is of a nature as to require the officer or employee to be absent from work for more than three (3) consecutive working days. A superintendent or department head who has been provided the proper medical notification by the employee shall promptly notify the Mayor of his designee.

(e) **Use of major illness leave**:

1.) Major illness leave not requiring hospitalization:

a.) If an accident or illness requires the officer or employee to be

absent from work for more than three (3) consecutive working days, major illness leave would start on the fourth (4th) working day lost.

b.) Major illness leave shall be used for such accident or illness only after all accumulative sick leave has been used.

2.) Major illness leave requiring hospitalization: If an accident or illness requires an officer or employee to be admitted to a hospital, major illness leave will start on the first (1st) day of hospital confinement, and continue until the doctor releases the employee for work.

3.) Major illness pay shall be at the officer's or employee's current straight time hourly rate exclusive of overtime, when taken ill.

(f) **Termination of major illness leave**: No payments shall be made for accumulated major illness leave upon termination of employment.

(g) **Major illness leave for current officers and employees**: An officer or employee who has not accumulated major illness leave prior to the implementation of this personnel policy shall be given major illness leave as follows:

1.) An officer or employee who has been a full-time employee a minimum of one (1) year of continuous employment prior to the implementation of this personnel policy shall be given twelve (12) major illness days.

2.) An officer or employee who has been a full-time employee less than one (1) year of continuous employment prior to the implementation of this policy shall be given the number of major illness days the officer or employee would have earned had this personnel policy been in effect when the officer or employee was hired.

(3) **Military leave of absence**:

(a) **Generally**: It is the policy of the City of Quincy to allow officers or employees a limited military leave of absence to enable officers or employees to fulfill military obligations.

(b) **Granting of leaves**: A military leave of absence shall be granted as required by law. Additionally if approved by the Mayor or his designee, a leave may also be granted after consultation with the appropriate superintendent or department: head.

(c) **Benefits while on leave**: Officers and employees shall be entitled to such benefits while on military leave as required by law. Additionally, the City grants the specific benefits set forth below.

1.) **United States reserve component**: An officer or employee who is a member of a reserve component of the United States Armed Service, the National Guard, or Naval militia shall be entitled for a period not to exceed fifteen (15) consecutive days in any calendar year to receive as pay from the City the difference between the amount of military pay received and the officer's or employee's current straight time hourly rate, exclusive of overtime, for the number of work days missed for military training. No payment shall be made during initial training periods. This is for summer camp only.

2.) **Emergency call-up**: In the case of an emergency call-up (or order to state active duty) by a governor, a military leave of absence to which an officer or employee is entitled or is granted, the officer or employee shall be paid the difference between the amount of military pay received and the officer’s or employee’s current straight time hourly rate, exclusive of overtime, for the number of work days missed for actual military duty. Such leaves will be granted without loss of accrued benefits.

3.) **Voluntary enlistment**: An officer or employee entering service active

military service for a single enlistment period will be granted a general military leave of absence as required by law. The City of Quincy will make every effort to reinstate an officer or employee returning from military leave to the officer's or employee's former job or an equivalent position, depending on the availability equivalent position, depending on the availability of such position. However, re-employment is not guaranteed. Further, there shall be no requirement on the part of the City of Quincy to terminate any replacement personnel.

(4) **Funeral leave**:

(a) **Generally**: It is the policy of the City of Quincy to grant officers and employees reasonable funeral leave time off with pay.

(b) **Definition**: Funeral leave is time off with pay granted to officers and employees to allow reasonable bereavement time.

(c) **Guidelines**:

1.) An officer or employee shall be granted up to five (5) days off with pay for time actually lost as a result of the death of an officer's or employee's spouse, son, a daughter.

2.) An officer or employee shall be granted up to three (3) days off with pay for time actual lost as result of the death of either his mother or stepmother, but not both, of either his father or stepfather, but not both, mother-in-law, father-in-law, brother, sister, son-in-law, and daughter-in-law, and if living with the employee, a stepson or stepdaughter.

3.) An officer or employee shall be granted one (1) day off with pay to attend the funeral of a grandparent, brother-in-law, or sister-in-law.

4.) Time off shall be consecutively scheduled work days and shall end the day of the funeral or the day after if travel is necessary. Leave will not be granted unless the officer or employee attends the funeral of the deceased.

5.) At the discretion of the superintendent or department head, an officer or employee shall be granted time off from work with pay to attend the funeral of a deceased co-worker. A deceased co-worker is defined as a City of Quincy officer or employee at the time of death.

6.) An officer or employee will not be eligible to receive paid funeral leave while not scheduled for work or absent from work because of vacation, holiday or leave of absence.

(5) **Jury duty leave**:

(a) **Generally**: It is the policy of the City of Quincy to grant officers and employees jury duty leave.

(b) **Definition**: Jury duty leave is time off from work with pay granted to officers or employees who are called for jury duty.

(c) **Guidelines**:

1.) An officer or employee who receives notice of jury duty must notify the officer's or employee’s superintendent or department head as soon as possible and present proof of such duty.

2.) An officer or employee serving jury duty shall be paid at the straight time hourly rate, exclusive of overtime.

3.) An employee serving on jury duty shall present the official court check of remuneration to the comptroller or other appropriate bookkeeping department.

(6) **Personal leave**:

(a) **Generally**: It is the policy of the City of Quincy to grant a personal leave

without pay to qualifying officers and employees.

(b) **Definition**: Personal leave is leave without pay granted an officer or employee for personal reasons including illness.

(c) **Guidelines**:

1.) An officer or employee who has completed six (6) months of full-time employment may request, personal leave without pay.

2.) A request for a personal leave must be submitted in writing to the superintendent or department head and approved by the Mayor or his designee. The superintendent or department head will make a recommendation for approval or disapproval to the Mayor or his designee. In reviewing the request, the superintendent or department head and Mayor or his designee should consider:

a.) The purpose for which the leave is requested.

b.) The length of time the officer or employee will be away.

c.) The effect the leave will have on the ability of the department to carry out its responsibilities.

d.) The officer's or employee's position and length of service.

3.) A personal leave may be granted for up to thirty (30) calendar days in one (1) calendar year.

4.) Additional personal leave may be granted in the same calendar years. The procedure for approval will be as previously outlined.

5.) Time spent on a personal leave in excess of thirty (30) days in one (1) calendar year will not be counted as time employed in determining an officer's or employee's eligibility for benefits that accrue on the basis of length of employment.

6.) The City will make an effort to reinstate an officer or employee to the same position previously occupied or to a similar position following a personal leave. For personal leaves of sixty (60) consecutive calendar days or longer, there is no guarantee that the same or a similar position will be immediately available at the time an officer or employee desires to return to work. In such instances, an officer's or employee's leave will be extended until such time as a suitable position is found. There is no obligation of the city, however, to necessarily reinstate the employee if the leave exceeds one (1) year.

13.238 <u>Vacations</u> ---

(1) **Generally**: It is the policy of the City of Quincy to grant vacations with pay to qualifying officers and employees in recognition of services performed.

(2) **Definition**: Vacation is time off from work with pay granted to qualifying officers and employees.

(3) **Vacation allowance accrual schedule**: Vacations shall accrue on the basis of the following schedule:

Years continuous services	Number of days of earned vacation with pay
1 - 7	2 weeks
8 - 15	3 weeks
16 - over	4 weeks

(4) **Vacation administration**:

(a) **Vacation**: Officers and employees shall earn vacation with pay at the beginning of the vacation year during which the required number of years of continuous serving occurs. For example, an officer or employee will be eligible for three (3) weeks paid vacation when the officer or employee starts his eighth (8th) year of continuous service.

(b) **Calendar year**: Vacations shall be administered on a calendar year basis.

(c) **Entitlement if employed entire preceding year**: An officer or employee who is a permanent employee on January 1 of any year shall be entitled to the above vacation, provided the officer or employee has been permanently employed throughout the preceding calendar year.

(d) **Entitlement if not employed entire preceding year**: If an officer or employee has been employed during only a part of the preceding calendar year, the officer or employee shall be entitled to a one-twelfth (1/12) prorated part of a vacation for each month of permanent employment during the preceding year. Working any part of a month shall be considered having worked a full month. By way of example, if a person started June 17, he/she would be given one (1) month credit for June. If a person terminated on June 17, he/she would receive one (1) month credit for June.

(e) **Continuous services**: For purposes of vacation, continuous service will be from the date of full-time employment and will not be considered interrupted by a short-term disability or illness (thirty (30) calendar days or less). Accrual will not continue during a long-term disability (more than thirty (30) calendar days).

(5) **Eligibility provisions - position change or status change**: An officer or employee promoted, demoted, or transferred to a position having a different vacation allowance will begin accruing vacation allowance on the basis of the vacation allowance for the new position. However, a part-time or temporary officer or temporary employee changed to full-time status, or vice versa, will begin or cease accruing vacation allowance on the basis of the new status.

(6) **Eligibility provisions - holiday, illness, and leaves of absence occurring during vacation**:

(a) **Holiday during vacation**: If a City of Quincy designated holiday is observed during an officer's or employee's vacation period, the officer or employee will be eligible for additional time off with pay equal to the holiday time off for which the officer or employee is eligible.

(b) **Sick leave and major illness leaves**: An officer or employee will not receive additional vacation time off due to illness occurring while on vacation.

(c) **Leaves of absence**: An officer's or employee's vacation allowance for a vacation will not be reduced by any unpaid leave of absence thirty (30) calendar days or less, for will it be reduced for any paid leave of absence.

1.) An officer's or employees vacation allowance for a vacation year will be reduced by one-twelfth (1/12) for each month of an unpaid leave of absence during the previous vacation year for each month of an unpaid leave of absence exceeding the initial thirty (30) calendar days of an unpaid leave of absence.

2.) An officer or employee entering active United States Armed Services or commencing a leave of absence of at least four (4) months will receive vacation pay for unused earned vacation allowance and accrued vacation allowance.

(7) **Eligibility provisions for terminating employees**:

(a) **Payment for vacation**: In all cases, a terminating officer or employee will

receive pay in lieu of any unused vacation allowance as of the most recent January 1. Additionally, a terminating officer or employee will receive pay in lieu of vacation allowance accrued during the current vacation year, provided the termination was due to one of the following reasons:

1.) Voluntary resignation with two (2) week's written notice.
2.) Involuntary termination of the officer or employee.
3.) Retirement.
4.) Death of the officer or employee.

(b) **Notice**: If an officer or employee resigned giving two (2) weeks' written notice, the City of Quincy may or may not use the officer's or employee's services.

(c) **Calculation**: Accrued vacation allowance for the current vacation year is computed on the basis of one-twelfth (1/12) of the officer's or employee's annual vacation allowance for each full month of employment between the most recent January 1st and the date of termination.

(8) **Vacation pay**: Vacation pay for officers and employees will be computed by multiplying the officer's or employee's current straight time hourly rate, exclusive of overtime, by the hours of vacation taken. An officer or employee will be paid vacation pay on the last scheduled work day prior to a vacation period, provided at least one (1) weeks' notice is given to the comptroller.

(9) **Vacation scheduling**:

(a) **Generally**: An officer's or employee's vacation, with the approval of the superintendent or department head, will be scheduled so as not to interfere with the efficient operation of a department or division. The superintendent or department head shall give due consideration to staffing requirements, officer or employee preference, and an officer's or employee's length of service.

(b) **Requests**: All superintendents or department heads shall request vacation preferences of their officers and employees no later than December 1 of each preceding year.

(c) **Carry-over**: Up to one-half (1/2) of an officer's or employee's vacation may be carried over into the next calendar year, but it must be used in the first half of that year.

(d) **Vacation units**: Vacations should normally be taken in units of at least one (1) week. Vacation may not be used in increments of less than two (2) hours at a time, subject to superintendent or department head approval.

(e) **No payment**: Whenever possible, officers and employees should take their total vacation. Pay in 1ieu of vacation will not be granted.

13.239 **<u>Retirement plan</u>** --- All eligible officers and employees of the City of Quincy will be included under one of the following retirement programs: Illinois Municipal Retirement Fund; Firemen's Pension Fund of Quincy, Illinois; or the Quincy Police Pension Fund. Policies and procedures governing benefits are available at the Comptroller's office.

13.240 **<u>Group Health and Hospitalization Insurance Plan</u>** --- Effective July 1, 1993, the City will pay all insurance cost on the employee and one-half (1/2) the cost to employee dependents coverage if said employee elected to have his dependents covered under the program. The City will pay the full cost of the dependent insurance coverage for the month(s) that an employee is sick least half (1/2) of the working days in the month and the employee has all his major illness

time used.

13.241 <u>Grandfather clause for fringe benefits</u> --- This policy is not intended to eliminate any accumulated fringe benefits of officers and employees who were employed prior to its implementation. All officers and ordinances or City policies will retain those benefits. These officers and employees will receive future fringe benefits as provided by this personnel policy upon its implementation.

13.242 <u>No additional fringe benefits</u> --- The fringe benefits provided for in this personnel policy shall not be modified or changed by any superintendent or department head. For officers and employees covered by a collectively bargained agreement, no additional fringe benefits shall be given any officer or employee exceeding those benefits provided for in the collectively bargained agreement.

Division 6
Collective Bargaining Units

13.244 <u>Recognition</u> --- The City of Quincy may, in its discretion, or shall, as required by law, recognize labor organizations and negotiate collectively bargained agreements. In the event a collectively bargained agreement is entered into, such agreement shall govern the terms and conditions of employment for employees governed by such agreement to the exclusion of this personnel policy. However, it is the express policy of the City that all future agreements or contracts shall, unless unusual a circumstance exist, be consistent with this personnel policy.

13.245 <u>Representative</u> --- In order to facilitate the relationship of the City with collective bargaining units the Mayor may designate one (1) or more officers or employees of the City as a representative or representatives of the City in dealing with such units. All dealings of the unit with the City shall then be through that representative, except as may otherwise be provided in a collectively bargained agreement.

Division 7
(Reserved)

ARTICLE III HOUSE NUMBERING

Section 13.301 **Numbers required** --- It is hereby made the duty of the owner, agent or person in possession of any and every building in the city to number it in the manner herein provided.

13.302 **Numbers heretofore assigned** --- The numbers heretofore assigned to lots or houses, except as hereinafter provided, shall remain the numbers of such lots or houses respectively, until otherwise changed by the City Engineer.

13.303 **Numbering** --- All buildings on the streets of the City of Quincy which run north and south shall be numbered as follows: Commencing on the east side with Maine Streets the base with number one hundred, so that the even numbers are on the east side and the odd numbers on the west side increasing the number one hundred each block so that in all cases the initial figure or figures in each block shall indicate and correspond with the number of streets north or south from Maine Street, except that the number one hundred shall be placed on the west or right hand side going south and so continue that all even numbers be on the right hand side and all odd numbers on the left.

All buildings on streets running east and west shall be numbered as follows: Commencing with number one hundred at Front Street with the odd numbers on the north side and the even numbers on the south side increasing one hundred with each block the same as for the street running north and south.

In determining such number there shall be allowed one number for each twenty-five feet of ground. All house numbers shall be assigned by the City Engineer.

13.304 **Penalty** --- Any person, firm or corporation who violates any of the provisions of this title shall, in addition to such other relief as the law may afford, be punishable as set forth in Chapter 32 of this Code.

ARTICLE IV CITY MARKET AND GARAGE

Section 13.401 <u>Market lot and garage - described</u> --- The south half of the west half of block numbered five in plat numbered one, of the subdivision of the estate of Samuel Alexander, deceased, in the City of Quincy, in the County of Adams, in the State of Illinois, together with any ground that the city Council may purchase for that purpose, shall be known and designated as the Central Market and Garage of the City of Quincy.

13.402 <u>Market and garage committee -rules</u> --- The Street and Bridge Committee of the City Council may make such reasonable rules and regulations governing said market and garage and the use thereof as to them may seem proper.

ARTICLE V DOCKS AND HARBORS

Section 13.501 **Public landing defined** --- All that part of the river front between Washington and Jefferson Streets and between Broadway and Maine Streets in the City of Quincy shal1 be and the same is hereby set apart for levee purposes to be used only as a public landing and as a public levee.

13.502 **Harbor Master - powers** --- The Chief of Police shall be Ex-Officio Harbor Master and shall have general control and supervision of the public landings and shall preserve order at all times in and about the same and he is hereby given the power to deputize any regularly appointed policeman to perform any and all duties dedicated to such Harbor Master. The authority of the Harbor Master shall extend over all the land set apart for public landings and over that portion of the Mississippi River to the middle of the main channel thereof, situated immediately westerly of all lands owned by the city.

13.503 **Harbor Master to assign places to boats, barges and rafts** --- The Harbor Master shall, whenever he may deem it necessary, assign places for all boats, barges, rafts and vessels of whatever kind, giving preference to commercial craft in the order of their arrival, and every person in charge thereof shall cause the same to be moored at or removed to the place assigned therefore; provided, that no boat, barge, or raft shall be compelled to leave its assigned place while receiving or discharging cargo.

13.504 **Rafts and barges - limit of time in harbor** ---- No raft or barge shall remain in the water at any part of the public landing for a longer time than ten days and every person who shall violate this provision shall upon conviction thereof be fined not less than five dollars nor more than two hundred dollars, and a like sum for each day thereafter that such rafts or barge shall remain at the public landing.

13.505 **Goods - when removed - storage** --- All goods, wares, merchandise, fuel, lumber or other things which may be landed at the improved portion of the public landing shall be removed as soon as practicable, and if suffered to remain over twenty-four hours, the Harbor Master shall cause the same to be removed to some suitable place at the charge of the owner unless by special permission of the Harbor Master the same be allowed to remain for a longer time upon payment therefore of the usual rates for warehouse purposes in the city and all such goods as may be landed at other places than herein specified may remain as long as the Harbor Master may permit, not exceeding ten days, and if suffered to remain beyond that time, he shall cause the same to be removed to some suitable place at the charge of the owner.

13.506 **To remove sunken boats** --- If a boat or flat shall sink in a harbor, it shall be the duty of the owner or owners thereof to immediately remove the same, or the wreck thereof at their own expense; and on their failure so to do it shall be the duty of the Harbor Master forthwith to remove the same at the expense of the owner or owners, and the said owner or owners shall be liable for the expense incurred in such removal by the Harbor Master.

ARTICLE VI REGULATIONS CONCERNING THE OPERATING OF BOATS

Section 13.601 <u>Definitions</u> --- When used in this article, unless the context requires otherwise, the following terms shall have the following meanings:

(1) "Motorboat" includes every surface vessel propelled by an internal combustion engine and not more than sixty-five (65) feet in length from end to end over the deck, excluding sheer.

(2) "Rowboat" includes every surface vessel, regardless of size, propelled by oars or paddles.

(3) "Carrying passengers for hire" mean the carriage of any person or persons by a vessel for a valuable consideration, whether direct or indirect, flowing to the owner, charterer, operator, agent or any other person interested in the vessel.

(4) "White light" means a clear, bright, colorless light of such character and strength as to be visible for distance of at least two (2) miles on a dark night with clear atmosphere.

(5) "Red light" or "green light" means light of that color which is visible for a distance of at least one (1) mile on a dark night with clear atmosphere.

13.602 <u>Classification of motorboats</u> -- Motorboats subject to the provisions of this ordinance are divided into four classes as follows:

Class A --- less than sixteen (16) feet in length.

Class 1 --- sixteen (16) feet or over and less than twenty-six (26) feet in length.

Class 2 --- twenty-six (26) feet or over and less than forty (40) feet in length.

Class 3 --- forty (40) feet or over and not more than sixty-five (65) feet in length.

13.603 <u>Lights</u> --- Every rowboat and motorboat in all weathers from sunset to sunrise shall carry and exhibit the following lights when under way and during such time no other light which may be mistaken for such lights shall be carried or exhibited:

(1) Every rowboat shall carry ready at hand, a lantern or flashlight showing a white light which shall be exhibited in sufficient time to avert collision.

(2) Every motorboat of Classes A and 1 shall carry the following lights:

(a) A bright white light aft to show all around the horizon.

(b) A combined lantern in the forepart of the vessel and lower than the white light aft, showing a green light to starboard and a red light to port, so fixed as to throw a light from straight ahead to two points abaft the beam on their respective sides.

(3) Every motorboat of Classes 2 and 3 shall carry the following lights:

(a) A bright white light in the forepart of the vessel as near the stern as practicable so constructed as to show an unbroken light over an arc of the horizon of twenty points of the compass, so fixed as to throw the light ten points on each side of the vessel; namely, from right ahead to two points abaft the beam on either side.

(b) A bright white light aft to show all around the horizon and higher than the white light forward.

(c) On the starboard side a green light so constructed as to show an unbroken light over an arc of the horizon ten points of the compass so fixed as to throw the light from straight ahead to two points abaft the beam on the starboard side. On the port side a red light so constructed as to show an unbroken light over an arc of the horizon of ten points of the compass so fixed as to throw the light from straight ahead to two points abaft the beam on the port side.

The said side lights shall be fitted with inboard screens of sufficient height and so set as to prevent these lights from being seen across the bow.

(4) Motorboats of Classes 2 and 3, when propelled by sail and by machinery or by sail alone, shall carry the colored side lights, suitably screened, but not the white lights prescribed by this section; provided that motorboats of all classes when so propelled shall carry ready at hand a lantern or flashlight showing a white light which shall be exhibited in sufficient time to avert collision; provided that motorboats of Classes A and 1, when so propelled, shall not be required to carry the combined lantern prescribed in Subsection (2) (b) of this Section.

13.604 Whistles --- Every motorboat of Classes 1, 2 and 3 shall be equipped with an efficient whistle or other sound-producing mechanical appliance of the following types:

(1) Class 1 shall be equipped with a mouth, hand or power operated appliance capable of producing a blast of two seconds or more duration and audible for a distance of at least one-half mile.

(2) Class 2 shall be equipped with a hand or power operated appliance capable of producing a blast of two seconds or more duration and audible for a distance of at least one mile.

(3) Class 3 shall be equipped with a power operated appliance capable of producing a blast of two seconds or more duration and audible for a distance of at least one mile.

13.605 Bells --- Every motorboat of Classes; 2 or 3 shall be provided with an efficient bell or device which produces, when struck, a clear bell-like tone of full round characteristics for sounding bell signals.

13.606 Lifesaving devices --- Every motorboat subject to the provisions of this ordinance shall carry at least one life preserver or life saving device for each person on board as follows:

(1) Motorboats carrying passengers for hire shall carry an approved life preserver for each person on board.

(2) Motorboats of Class 3 not carrying passengers for hire shall carry an approved life preserver or ring buoy for each person on board.

(3) All other motorboats not provided for by this section shall carry an approved life preserver, ring buoy or buoyant cushion for each person on board except that commercial fishing boats may use wooden life floats made of light buoyant wood instead.

All such lifesaving devices shall be at all times so placed as to be readily accessible.

13.607 Fire extinguishers --- Motorboats of Classes 1, 2 and 3 propelled by machinery other than by steam shall be equipped with fire extinguishers as hereinafter provided. Such extinguishers, if entirely portable, shall have a gross weight of not to exceed fifty-five (55) pounds when fully charged. If any extinguisher exceeds fifty-five (55) pounds in gross weight when fully charged, it shall be equipped with a suitable hose and nozzle on a reel or other practicable means for reaching every part of the space to be protected by it. Such extinguishers may be of any of the following types: 1 1/4 gallon foam; 4 pound carbon dioxide; or one quart tetrachloride and shall be of the following number:

Class 1	1
Class 2	2
Class 3	3

Provided, however, that boats fitted with a fixed carbon dioxide system of approved type, properly installed and maintained, may be equipped with one less extinguisher than is otherwise required by this section; and provided further that a 2 1/2 gallon foam extinguisher or a 15 pound carbon dioxide extinguisher may be substituted for any two of the extinguishers other than a fixed system required by this section.

Such fire extinguishers shall be at all times kept in condition for immediate and effective use and shall be so placed as to be readily accessible.

13.608 Exemptions for outboard racing motorboats --- Sections 13.605, 13.606, 13.607 of this article shall not apply to motorboats propelled by outboard motors while competing in any race previously arranged and announced, or, if such boats be designed and intended solely for racing, while engaged in such navigation as is incidental to the tuning up of the boats and engines for the race.

13.609 Carburetor flame arrestors and backfire traps --- Every motor boat covered by this article shall have the carburetor or carburetors of every engine therein (except outboard motors) using gasoline as fuel equipped with an approved device which his demonstrated its ability to arrest backfire.

13.610 Ventilation --- Every motorboat or vessel constructed or decked over and which uses gasoline or other liquid fuel having a flash point of less than 110 degrees Fahrenheit shall be provided with ventilation as follows:

(1) Motorboats constructed so that the greater portion of the bilges under the engine and fuel tanks are open and exposed to the natural atmosphere at all times need not be equipped with ventilators.

(2) Any other motorboat covered by this article shall be equipped with at least two ventilators fitted with cowls or their equivalent so as to properly and efficiently ventilate the bilges of every engine and fuel tank compartment in order to remove any inflammable or explosive gases.

13.611 Persons prohibited from operating motorboats -- No person who is a habitual user of narcotic drugs or who is under the influence of intoxicating liquor or narcotic drugs shall operate any motorboat or rowboat on waters within the jurisdiction of the City of Quincy.

13.612 Disregard for safety of persons or property --- No person shall operate a motorboat or rowboat with a willful or wanton disregard for the safety of persons or property.

13.613 Speed and manner of operation --- No person shall operate a motorboat on waters within the jurisdiction of the City of Quincy at a speed greater than is reasonable and proper considering traffic conditions or in such a manner as to endanger the life or limb or injure the property of any person.

13.614 Application of provision --- The provisions of this Article shall apply to all portions of the Quincy Bay and Mississippi River and their tributaries lying within the State of Illinois and, further, lying within the corporate limits of the City of Quincy, Illinois and for a distance of three

(3) miles beyond such corporate limits.

13.615 <u>Penalty - enforcement of penalty against boat or vessel</u> -- Whoever operates, or owns and permits the operation of, any rowboat, motorboat or vessel subject to the provisions of this Article in violation of any provision or requirement of this Article is guilty of a misdemeanor and punishable by a fine as provided in Chapter 32. For any penalty incurred under this Section, the motorboat or vessel may be held liable and proceeded against to enforce the penalty if not otherwise satisfied.

ARTICLE VII SUBDIVISIONS

Section 13.701 <u>Definitions</u> ---

(1) For the purpose of this Article subdivision of land is (a) the division of real property into two or more lots or parcels wherein any one lot or parcel is caused to be five acre or less in area; or (b) dedication of a road, highway or street through a tract of land regardless of area, or involving any easement of access. Any sale or contract of sale or agreement to purchase any lot or division of land either by lot description or by metes and bounds as defined in the preceding portion of this section shall constitute a subdivision of land and require, prior to any sale or contract of sale or agreement to purchase and before the delivery of a deed, the approval and recording of a plat as herein required; provided however, that the re-subdivision of existing lots or parcels of land heretofore platted into parcels or lots less than five acres, into two or more lots which does not cause to be created a lot or parcel of land with a minimum width of less than sixty feet at the front of the building line and which maintains a minimum area of at least six thousand square feet in each lot shall not be considered as a subdivision of land, except that property heretofore zoned for commercial or industrial use shall not be required to maintain area or width standards of more than those required by the zoning ordinances of the city; and provided further that the sale or exchange of existing parcels or tracts of land of record before January 1, 1958 shall not be considered as a subdivision of land; and provided further that the sale or exchange of parcels of land to or between adjoining property owners, where such sale or exchange does not create additional lots, shall not be considered as a subdivision of land.

(2) Whenever the word "commission" is used in these rules and regulations, it shall be deemed to refer to the Plan Commission of Quincy, Illinois and whenever the word "council" is used, it shall be deemed to refer to the City Council of the City of Quincy, Illinois.

13.702 <u>Approval of subdivision plats</u> ---

(1) **Generally**: No plat, plan, subdivision or re-subdivision of land within the corporate limits of the City of Quincy or in contiguous territory within the one and one-half miles of the corporate limits thereof, shall be recorded in the office of the Adams County Recorder of Deeds unless such plat, plan, subdivision or re-subdivision has been first submitted to and approved by the Commission and by the City Council as hereinafter provided. A preliminary plan shall first be submitted to the Commission in accordance with Section 13.703 hereof. The Commission shall have thirty-five days from the date of the submission of any plat, plan, subdivision or re-subdivision to review and approve or disapprove such plat, plan, subdivision or re-subdivision. The failure of the Commission to disapprove any properly submitted plat, plan, subdivision or re-subdivision within a period of thirty-five days from the date of submission shall be deemed approved by the Commission. Any plat, plan, subdivision or re-subdivision approved by the Commission shall be promptly submitted to the City Council its consideration, approval or disapproval. In the event that the Commission does not approve a plat, plan, subdivision or re-subdivision, such disapproval shall be promptly submitted to the City Council, together, with a statement of the reason or reasons for such disapproval. Any plat, plan, subdivision or re-subdivision disapproved by the Commission may then be approved only after a two-thirds vote of the City Council members voting thereon. Upon approval of the City Council, the preliminary plan shall be deemed accepted subject to the provision of Section 13.703 hereof and approval of a final plat in accordance with Section 13.704 hereof.

(2) **Public hearing - notice**: The Plan Commission shall cause to be published public notice of the hearing on each preliminary plan filed with the Commission at least once, not, less than fifteen (15) days nor more than thirty (30) days before such hearing, in a newspaper published within the City of Quincy.

(3) **Fees**: A fee of $50.00 shall be paid to the city to defray the cost of publishing notice of the proposed preliminary subdivision plan. Such fee shall be paid to the secretary of the Plan Commission.

13.703 **Preliminary plan** --- In seeking to subdivide land into building lots or to dedicate streets, alleys or land for public use or to subdivide land into building lots, together with the dedication or reservation of public or private streets respectively, the owner shall submit three copies of a preliminary sketch plan to the Commission before submission of the final plan. The preliminary plan shall show:

(1) The location of present property lines, streets, buildings, water courses, tree masses and other existing, features within the area to be subdivision and similar facts regarding existing conditions on land immediately adjacent thereto.

(2) The proposed location and width of streets, alleys, lots, building lines and easements.

(3) Existing sewers, water mains, culverts and other underground structures within the tract or immediately adjacent thereto. The location and size of the nearest water main and sewer or outlet are to be indicated in a general way upon the plat.

(4) The title under which the proposed subdivision is to be recorded and the name of the subdivider.

(5) The names and adjoining boundaries of all adjoining subdivisions and the names of record owners of adjoining parcels of unsubdivided land.

(6) Contours with intervals of five feet or less.

(7) North point, scale and date.

(8) The zoning district or districts for the property to be subdivided, if other than single family residence.

(9) Grades and profiles of streets and plans or written and signed statements regarding the grades of proposed streets and the width and type of pavement, location, size, type of sanitary sewers and other sewage disposal facilities, water mains and hydrants and other utilities; storm water drainage facilities; and all other proposed improvements including but not limited to sidewalks, plantings, parks, markers and street lights.

Preliminary plans not containing all of the above data will not be approved. Preliminary plans must be approved by the Commission and the Council in accordance with Section 13.702.

Approval of the preliminary plan does not constitute an acceptance of the subdivision by the city. One copy of the approved preliminary plan, signed by the chairman of the Commission or such member of the Commission so delegated by it and the Mayor, shall be retained in the office of the City Clerk. One signed copy shall be given to the subdivider. One signed copy shall be retained by the Plan Commission. Receipt of this signed copy is an authorization for the subdivider to proceed with the preparation of plans and specifications for the minimum improvements required in Section 13.712 of this Article, and with the preparation of' the final plat. Prior to the construction of any improvement required in Section 13.712 or to the submission of any bond, the subdivider shall furnish the City Engineer all plans, information and data necessary for said improvements. These plans shall be examined by the City Engineer and

will be approved if in accordance with the requirements of Section 13.712 of this Article. Following this approval, construction can be started or the amount of a bond determined. If the final plat conforms to the approved preliminary plat and if necessary improvements are constructed in accordance with the approved plans therefore or a satisfactory bond submitted assuring their construction in accordance with the approved plans, the final plat will be approved by the Commission and the Council.

13.704 <u>Final plat</u> --- The final plat shall be black on white and four prints thereof shall be submitted to the Commission. The Commission and the Council shall act upon the final plat within forty-five days after it has been submitted unless the subdivider agrees to an extension of this period. The approval of the Council shall be shown on the plat with the date of which approval and over the signature of the City Clerk. The final plat is to be drawn at a scale of 100 feet or less to the inch from an accurate survey and on one or more sheets whose maximum dimensions are 29 inches by 34 inches. The final plat shall show:

(1) The boundary lines of the area being subdivided with accurate distances and bearings.

(2) The lines of all proposed streets and alleys with their width and names.

(3) The accurate outline of any property, which is offered for dedication for public use and a notation of any improvements to be located thereon including but not limited to sidewalks, plantings, parks, markers and street lights.

(4) The line of departure of one street from another.

(5) The lines of all adjoining lands and the lines of adjacent streets and alleys with their width and name.

(6) All lot lines and an identification system for all lots and blocks.

(7) Building lines and easements for right-of-way provided for public use, services or utilities with figures showing their dimensions.

(8) All dimensions, both linear and angular, necessary for locating boundaries of subdivisions, lots, streets, alleys, easements for building lines and of any other areas for public or private use, the linear dimensions are to be expressed in feet and decimals of a foot.

(9) Radii, arcs and chords, points of tangency, central angles for all curvilinear streets, and radii for all rounded corners.

(10) All survey monuments and bench marks together with their descriptions.

(11) Name of subdivision and description of property subdivided, showing its location and extent, points of compass, scale of plan, and name of owner or owners of the subdivider.

(12) Certification by a civil engineer or surveyor to the effect that the plan represents a survey made by him and that all necessary survey monuments are correctly shown thereon and that all changes or modifications of the preliminary plat upon which City Council approved of such preliminary plat were based, have been complied with.

(13) If no public sanitary sewer is to serve such subdivision, a certificate of approval of the Adams County Health Department shall be affixed to the final plat.

(14) Before it is recorded, a certificate shall be affixed to the final plat showing that all taxes payable shall have been previously paid in full.

13.705 <u>Streets, alleys and easements</u> ---

(1) **Generally**: The widths and arrangement of streets and rights-of-way in new subdivisions shall conform to the official plan of the City of Quincy. The minimum width for

street rights-of-way other than those shown on the official plan shall be fifty feet. When streets adjoin unsubdivided property a half street not less, however, than thirty feet in width may be dedicated and whenever the subdivided property adjoins a half-street the remainder of the street shall be dedicated. Streets that are obviously in alignment with others already existing and named shall bear the names of the existing streets. In all subdivisions within the city or within one and one-half miles thereof, streets shall not be dedicated to a subdivision's outermost or side boundaries, but the subdivision shall give to the city a fifty year option to purchase by warranty deed, for one dollar, a strip of land constituting an extension of the street to the subdivision boundary. No street shall be so designed so as to logically utilize park roads for the movement of traffic to and from the subdivision. Alleys are not permitted in residential areas. Alleys must be provided in the rear of the business lots and if provided, shall be at least twenty feet wide. A five foot cut-off shall be made at all acute angle alley intersections. Where alleys are not provided, easement of not less than seven and one-half feet in width shall be provided on each side of all rear lot lines and along side lot lines where necessary for poles, wires, conduits, storm and sanitary sewers, gas, water and heat mains. Easements of greater width may be required along or across lots where necessary for the extension of main storm and sanitary sewers and other utilities, and where both water and sewer lines are located in the same easement.

(2) **Approval of highway authority**: No plat shall be approved unless the same has been approved in writing by the Illinois Department of Transportation with respect to any roadway access where such access is to a state highway or by any other relevant local highway authority with respect to all other roadway access.

13.706 <u>Blocks</u> ---

(1) No block shall be longer than twelve hundred (1200) feet.

(2) Where it is desirable to subdivide tract of land, which because of its size or location, does not permit an allotment directly related to a normal street arrangement there may be established one or more "places". Such a place may be in the form of a court, a dead-end street, or other arrangement; provided however, that proper access shall be given to all lots from a dedicated place (street or court). Such a place shall terminate in an open space (preferably circular) having a minimum radius of fifty (50) feet.

13.707 <u>Lots</u> ---

(1) All side lines of lots shall be at right angles to straight street lines, or radial to curved street lines unless a variation to this rule will give a better street and lot plan. Lots with double frontage should be avoided.

(2) No lot shall contain an area less than required by the zoning ordinance and no lot in a residential area shall have a width of less than sixty feet at the front building line; provided however, such a lot may have a width of less than sixty feet at the front building line of a substantial number of the residential lots in the vicinity of said lot have a width of less than sixty feet, and provided further that in the opinion of the Plan Commission such reduction in width can be granted without substantial detriment to the public good.

(3) Corner lots shall have extra width sufficient to permit the establishment of front building lines on both the front and the side of the lots adjoining the streets.

(4) Lots on all street intersections shall have a minimum radius of twenty feet at the street corner.

13.708 <u>Building lines</u> --- Building lines shall be shown on all lots. Such lines shall not be less than required by the zoning ordinance. Restrictions requiring buildings to be set back to such building lines shall be shown on the plat.

13.709 <u>Character of development</u> --- The Commission shall confer with the subdivider regarding the type and character of development that will be permitted in the subdivision and may agree with the subdivider as to certain minimum restrictions to be placed upon the property to prevent the construction of substandard buildings, and control the type of structures, or the use of the lots which unless so controlled would clearly depreciate the character and value of the proposed subdivision and of adjoining property.

13.710 <u>Parks, school sites, etc.</u> --- In subdividing property consideration shall be given to suitable sites for schools, parks, playgrounds and other common areas for public use so as to conform to the official plan of the City. Any provision for schools, parks and playgrounds should be indicated on the preliminary plan in order that it may be determined when and in what manner such areas will be dedicated or acquired.

13.711 <u>Easements along streams</u> --- Whenever any stream or important surface drainage course is located in an area that is being subdivided, the subdivider shall dedicate an adequate easement as determined by the Council along each side of the stream, for the purpose of widening, deepening, sloping, improving or protecting the stream and for the construction of storm and sanitary sewers.

13.712 <u>Public improvements</u> --- The improvements required by this section and set forth below shall be installed prior to the approval of the final plat which is prepared for recording purposes. In lieu of actual completion of such improvements, the subdivider may:

(1) File with the City Clerk a surety bond to secure to the city the actual construction of such improvements in accordance with the provisions of this Article and within a period not to exceed two years, such bond to be in an amount adequate to cover the cost of the improvements, which amount shall be first approved by the City Engineer and such bond to be executed by the subdivider as principal and as surety by a corporate surety authorized to do business as such in the State of Illinois.

(2) Deposit with the city cash to cover the cost of the improvements in lieu of such bond;

(3) Agree with the city that the city under the local improvement act may construct the improvements and assess the cost against the property benefited; or,

(4) Enter into an escrow agreement with the city and an escrow agent to assure adequate funding for the installation of such improvements, which escrow agreement shall provide for the deposit and proper disbursement of funds adequate to cover the costs of the improvements which amount shall be first approved by the City Engineer. The escrow agreement shall be in form adopted by the City Engineer and executed by the subdivider as developer, the City Engineer for and on behalf of the city, and bank or savings and loan association authorized to do business in the State of Illinois as escrow agent. In lieu of the escrow requirements provided herein, the subdivider may establish a line of credit with, or obtain a letter of credit from, a bank or savings and loan association authorized to do business in the State of Illinois in an amount adequate to

cover the costs of improvements, as approved by the City Engineer. In the event the subdivider establishes a line of credit to finance the completion of the improvements, such line of credit agreement shall be irrevocable, and shall provide that the city shall have the right to draw upon the line of credit for the purpose of curing any default by the subdivider under its' development agreement with the city or for completing the public improvements to the subdivision, without obligation by the city to such lender for amounts drawn on the line of credit. If the subdivider obtains a letter of credit, such credit shall be irrevocable and shall name the city as a beneficiary of such credit. Such credit shall expire after a period of time, and shall permit the city to draw upon credit amount, as deemed sufficient by the City Engineer to insure the completion for improvements. Any such line of credit agreement or letter of credit shall be in a form adopted by the City Engineer. In addition to entering into an escrow agreement, establishing a line of credit or obtaining a letter of credit as set forth above, a subdivider shall file with the City Clerk a bond without surety in an amount equal to the costs of the improvements, but also executed by the subdivider's spouse, if any, or if a corporation by the majority of the shareholders. The City Engineer may however waive any requirement that the bond be executed by parties other than the subdivider by so noting such waiver on said bond.

Notwithstanding that a subdivider has satisfied any of the above stated alternatives, the subdivider shall never the less be liable for the actual completion of such improvements whether or not the bond or deposit provided for is actually adequate to complete such improvements.

(a) **Permanent markers**: All subdivision boundary corners and the four corners of all street intersections shall be definitely marked with permanent monuments. A permanent marker shall be deemed to be concrete with a minimum dimension of four (4) inches extending below the frost line or steel pipe firmly imbedded in concrete which extends below the frost line. Should conditions prohibit the placing of monuments on line, off-set marking will a permitted; provided, however, that exact off-set courses and distances are shown on the subdivision plat. A permanent bench mark shall be accessibly placed and accurately noted on the subdivision plat.

(b) **Streets**:

1.) For all subdivisions within the City of Quincy. or within one and one-half miles thereof, all streets shall be graded to their full width.

2.) All residential streets shall be surfaced to a width of thirty feet including curbs.

3.) All streets shall include concrete curbs and gutters.

4.) All street surfacing with a grade in excess of nine percent (9 %) shall be 4,000 pounds concrete @ 28 days, six inches thick.

5.) All streets with a grade of less than 9% shall be of 4,000 pound concrete @ 28 days, six inches thick or a 1 ¾ inch plantmix asphaltic concrete binder course and a 1 ¼ inch plantmix concrete surface course (equivalent to Illinois Division of Highways I-II or B-5) and an eight inch granular base course or six inch bituminous aggregate mixture (minimum Marshall stability of 90).

6.) Street surfacing shall not be completed until all utilities and sewers constructed in trencher have been fully installed in the street and to the property line.

7.) If asphaltic concrete surface treatment is used as described in 5.) above, the surface course shall not be completed until at least 75 % of the homes in any such subdivision are completed or commenced but not later than 4 years after the start of initial street construction. Base to receive prime coat upon completion.

8.) When a subdivision adjoins a "major street" as shown and defined by the official city street map plan (as adopted and set forth in resolution dated May 18, 1981, or as otherwise from time to time amended or modified) any new pavement required to be constructed within the right-of-way of the “major street" shall be constructed so as to equal the standard of construction of the existing "major street" pavement or the standard required for the subdivision, whichever is greater. If the “major street" is proposed for reconstruction within 3 years of the date of the approval of the subdivision then the new pavement adjoining the "major street" should be constructed to equal or match the proposed pavement structure standards for the "major street".

9.) All contractors making street improvements shall give the City Engineer appropriate proof of adequate bonding or escrow for such improvements.

10.) All grading and surfacing shall be under the supervision of the City Engineer and subject to his approval. At least twenty-four hours prior to the beginning of construction of public improvements, notification shall be given to the City Engineer's office to provide inspection. Any construction undertaken without city inspection or their duly authorized representative may in the discretion of the City Engineer be rejected.

11.) City inspection will be intended to assure that public improvements are installed in accordance with the plans and specifications and shall not include location, staking and material inspection proportioning all of which will be handled by qualified engineers provided by the subdivider.

12.) An inspection fee of $15.00 per lot shall be paid to the City Treasurer by the subdivider prior to commencement of any street improvement to defray cost of city inspection.

(c) **Sidewalks**: Four feet (4') of concrete sidewalk shall be constructed along both sides of every major street as shown on the official city plan and in accordance with applicable standard specifications of the city.

In the event the Commission recommends the approval of a subdivision but waives the requirements for sidewalks along both sides of major streets such recommendation shall be subject to the requirement that the subdivider shall be required to enter into an escrow agreement with the city and an escrow agent to assure adequate funding for the construction of sidewalks as required by this paragraph. The escrow agreement shall be in a form adopted by the City Engineer for and on behalf of the city, and a bank or savings institution authorized to do business in the State of Illinois as escrow agent.

(d) **Water lines**: Where a public water supply system is available each lot within the subdivision area shall be provided with a connection to such water supply at the property line. In proposed subdivisions outside the city limits and not served by the public water supply, water supply system shall comply with requirements of the State Health Department or the Adams County Department of Public Health.

(e) **Sanitary sewers**: All lots shall be provided with a connection to the city sanitary sewer at the property line unless approval of individual sewage disposal system is obtained from the Adams County Health Department. Common treatment plants are hereby prohibited. All sewer extensions shall be in accordance with the master plan for Quincy sewer extensions.

(f) **Drainage**: The plat shall be laid out so as to provide proper drainage of the area being subdivided. Drainage improvements shall maintain any natural watercourse and shall

prevent the collection of water in any low spot. A storm sewer system, approved by the Adams County Health Department, may be required.

(g) **Street lighting**:

1.) Subdivisions within city: For all subdivisions within the City of Quincy, lighting shall be provided for and along all streets sufficient to reasonably light such streets and corners thereof. Street lights shall be placed in locations shown on the final plat. The specific lights to be installed shall be selected from among those approved by the City of Quincy for such purpose and for which the City of Quincy has an agreement or franchise with Central Illinois Public Service Company, or other appropriate party, to install, service and maintain the same. All such street lighting shall be installed, serviced and maintained in accordance with such agreement or franchise. The subdivider shall pay to the City of Quincy at the same time all other fees are paid to the City of Quincy on account of such subdivision an amount equal to five and one-half (5 ½) times the annualized charge for the installation, servicing and maintenance of each street light installed in the subdivision as provided for in the agreement or franchise then in effect. The subdivider shall further pay to the City of Quincy at the same time all other fees are paid to the City of Quincy on account of such subdivision the amount of any excess facilities charges for the installation of each street light as required by such agreement or franchise then effect. Such amount shall be a part of the general funds of the City of Quincy.

2.) Subdivisions outside city: For all subdivisions outside the City of Quincy, but within one an one-half (1-1/2) miles thereof, lighting shall be provided for and along all streets sufficient to reasonably light such streets and corners thereof if the governmental body acquiring title to or authority over such streets upon dedication has agreed to have installed serviced and maintained such lights. Street lights shall be placed in locations approved by the City Engineer. The specific lights to be installed shall be selected from among those approved by the applicable governmental body for such purpose and shall be installed, serviced and maintained as provided by the applicable governmental body. The subdivider shall pay to the City of Quincy at the same time all other fees are paid to the City of Quincy on account of such subdivision an amount equal to five and one-half (5 ½) times the annualized charge for the installation, servicing and maintenance of each street light installed in the subdivision as provided for in the agreement or franchise then in effect. The subdivider shall further pay to the City of Quincy at the same time all other fees are paid to the City of Quincy on account of such subdivision the amount of any excess facilities charges for the installation of each street light as required by such agreement or franchise then in effect. Such amount, together with all other amounts collected hereunder, shall be held in a restricted purpose account by the City of Quincy. Interest earned on such account shall be transferred to the general funds of the City of Quincy. The City of Quincy shall pay to the applicable governmental body one-third (1/3) of such sum paid each year for each light thereafter for three (3) years, but not after the City of Quincy acquires title to or authority over any of the street lights by annexation or otherwise.

13.713 **<u>Variations and exceptions</u>** --- Whenever the tract to be subdivided is of such unusual size or distance beyond the corporate limits, or shape, or is surrounded by such development, or unusual conditions that the strict application of the requirements contained in this article would result in real difficulties and substantial hardships or injustices, the City Council, after recommendations of the Commission and after a public hearing, may vary or modify such requirements so that the subdivider is allowed to develop his property in a reasonable manner,

but so at the same time the public welfare and interests of the city are protected and the general intent and spirit of this Article and Illinois Revised Statute are preserved. Payment of $15.00 shall first be made to defray the cost of advertising for such public hearing.

13.714 Approval as prerequisite --- No water mains, or pipes shall be laid or connections to the city sewer system shall be made and no building permits may be issued for construction of buildings within a subdivision until the plat is approved in this manner hereinabove prescribed.

13.715 Changes and amendments --- The Commission shall from time to time prepare and recommend in writing to the Council such changes or additions to the provisions and regulations herein contained for subdivision control as the Commission may deem necessary or advisable. Such changes or additions shall become an amendment to this Article.

13.716 Small tracts --- When there is presented to the Council for approval a proposed subdivision or re-subdivision of a tract of land, if the City Council, after consideration thereof and recommendation thereon by the Commission, is of the opinion that the intent and purpose of the provisions of this Article are not violated by such proposal and the construction of the improvements herein required cannot be reasonably enforced, the Council may waive the applications or enforcement of provisions of this Article and approve such proposal without requiring further procedure. The Commission may approve the re-subdivision of existing tracts into two or more lots without the necessity of a plat where each such newly created lot has built thereon a separate building erected before January 1, 1958.

13.717 Building within proposed major street extensions --- After the effective date of this article no permanent building or structure shall be erected within the extended right-of-way lines or major streets as shown on the official city plan, either within the city or for a distance of one and one-half (1 ½) miles from the corporate limits.

13.718 Enforcement --- It shall be the duty of the Building Inspector and Director of Administrative Services to enforce the provisions thereof. They may call upon any department or official of the city to furnish them with such information and assistance as they may deem necessary for the observance or enforcement of this Article, and it shall be the duty of such department or officer to furnish such information and assistance whenever required

13.719 Additional requirements for flood hazard areas --- In addition to any applicable provisions, all subdivisions shall conform with the regulations regarding development in special flood hazard areas established by Article VII (Development in Special Flood Hazard Areas) of Chapter 23 (Buildings, Construction and Development Regulations) of this Code.

13.720 Penalty --- Any person, firm or corporation who violates any of the provisions of this title shall, in addition to such other relief as the law may afford, be punishable as set forth in Chapter 32 of this Code.

ARTICEL VIII CEMETERIES AND CITY VAULT

Section 13.801 **Custody of vault** --- The following regulations are hereby established concerning the city vault located in Woodland Cemetery and the said vault shall be under the charge of the Woodland Cemetery Association, which shall keep the keys of the same, and under its direction the remains of deceased persons shall be placed therein.

13.802 **Length of time bodies to remain in vault** --- No body of a deceased person shall be allowed to remain in said vault for a longer period than four weeks from the date of depositing the same therein, unless by special consent of the Mayor; and in case any such body is left in said vault for a longer period of time than authorized by this Article, it may be removed to and buried in the public burying ground, in such manner as the Mayor may direct, the Woodland Cemetery Association keeping a record of the time and place of burial.

13.803 **Damaging property** --- Any person or persons who shall break down, deface, hack or in any manner injure the fence or enclosure of any cemetery or burying ground in the city or who shall tear, deface or in any manner injure any lot, enclosure, tombstone, or material erected around or at any grave or lot, or any shrub, bush, flowers, or other ornament or thing within such cemeteries or burying grounds or who shall cut, hack or deface any fountain, tree, shrub, or post or in any manner injure the same, or anything belonging to, or standing on, or being within said cemeteries or burying grounds, or who shall in any manner injure the grass, herbage, fountains, streets, walks, ornaments or other things in such cemeteries or burying grounds, or who shall leave open any gate of the enclosure of the same, or any private burying ground therein, the same being willfully or carelessly done, or who shall therein engage in any sport or amusement, or hunt, or discharge any firearm or other explosive, or who shall turn any cattle or animals therein, or who shall therein behave in a boisterous, indecent or rude manner, or who shall disturb therein any burying party or any person lawfully in a cemetery shall be fined as provided for in Chapter 32.

13.804 **Woodland Cemetery management** --- The Woodland Cemetery Association shall have and is hereby granted full power and authority over the management and operation of Woodland Cemetery and to allow the gates to be closed or opened at such times and under such conditions as it shall by rule determine. It shall be unlawful for any person to enter or be within such enclosure at times when such gates are closed and locked.

13.805 **Labor in Woodland Cemetery** --- It shall be unlawful for any person or persons to do any labor in or about any lot or ground within said cemetery for hire, except under the direction of and by authority of the Woodland Cemetery Association, by its proper officers or persons by said association designated for such purpose.

13.806 **Penalty** --- Any person, firm or corporation who violates any of the provisions of this title shall, in addition to such other relief as the law may afford, be punishable as set forth in Chapter 32 of this Code.

ARTICLE IX OTHER REGULATIONS PERTAINING TO CITY GOVERNMENT

Section 13.901 **Corporate Seal** --- The corporate seal of the city shall be and is hereby established as a circular disc with the words "City of Quincy, Illinois - Incorporated A.D. 1840" of the periphery thereof and frontal elevation of a portico with four pillars surmounted by a flag in the center.

13.902 **Fiscal year** --- The fiscal year of the city shall begin on the first day of May of each year and end on the thirtieth day of April of the following year.

13.903 **Datum and bench marks** --- The base, or datum plane, for the city shall be sea level datum as established by the United States Geological Survey being a level plane six hundred one and thirty-two hundredths (601.32) feet below the line on a copper marker of the United States Geological Survey bench mark on the south entrance to the City Hall building at the northeast corner of Fifth and Vermont Streets, in the city.

The grades of all streets between the point at which the grade has been heretofore or may be hereafter specifically fixed and established and the elevation above said datum plane specifically fixed shall be a straight line drawn from one fixed point to the nearest fixed point, unless the City Engineer deems it expedient to make use of a vertical curve instead of the straight line above specified.

13.904 **Injury to public property** --- It shall be unlawful to injure, deface or interfere with any property belonging to the city without proper authority from the Council. Any person violating the provisions of this Section shall be fined as provided for in Chapter 32 of this Code.

13.905 **Elections** --- Elections for municipal offices shall be held as provided by statute and at the times provide by statute.

13.906 **Surety bonds** --- Whenever a surety bond to indemnify the city is required as a pre-requisite to exercising the duties of any office or position, or to the issuance of a license or permit or the exercise of any special privilege, the surety on such bond shall be a corporation licensed and authorized to do business in the state as a surety company in the absence of specific provision to the contrary; provided, however, the Council may, if it sees fit, accept two personal sureties if each such surety has real estate in Adams County, Illinois for at least twice the amount of the bond after having first deducted all homestead and other exemptions and all liens, mortgages and other encumbrances. A declaration of assets for personal sureties shall be under oath and shall be renewed each two years.

Whenever in its opinion additional sureties or an additional surety may be needed on any bond to indemnify the city against loss or liability because of the insolvency of the existing surety or sureties or for any other reason, the Council may order a new surety or sureties to be secured for such bond. If such new surety or sureties are not procured within ten days from the time such order is transmitted to the principal in the bond, or his assignee, the Council shall declare the bond to be void and thereupon such principal, or assigned, shall be deemed to have surrendered the privilege or position as a condition of which the bond was required.

13.907 <u>Daylight savings time</u> --- For the periods commencing at 2:00 o'clock A.M. on the last Sunday in April and ending at 2:00 o'clock A.M. on the last Sunday in October, Eastern standard Time, commonly called and known as Daylight Savings Time, shall be and is hereby established as the official time in and for the City of Quincy for the transaction of all city business. All regular and official proceedings of the City Council and all official businesses of the city shall be regulated so as to conform with the provisions of this section and when by ordinance, resolution or action of any municipal body or officer an act must be performed at or within a prescribed time, it shall be performed in conformity with said Daylight Savings Times as hereinafter prescribed and established.

13.908 <u>Rules and regulations</u> ---

(1) Any and all rules and regulations concerning the administration, operation, and functions of city departments or implementing ordinances of the city, which may from time to time be adopted by the corporate authorities, or duly promulgated by officers, boards, or commissions of the city pursuant to ordinance, shall, in addition to any other publication requirements fixed by law or ordinance, be published as an appendix to the Municipal Code of the City of Quincy. Rules and regulations in such appendix shall be enumerated and organized according to the articles and chapters of the Municipal Code which either pertain to the subject matter of the rule and regulation, or to the authority of the promulgating officer or body.

(2) Rules and regulations shall be considered promulgated and binding upon their adoption by the City Council, if such rules and regulations require such adoption, or upon the filing of a certified copy of the same with the City Clerk by the issuing officer, board or commission. Upon receipt of any rules and regulations by the City Clerk, he shall call such items to the attention of the City Council at its next regular meeting by placing them on the agenda under the heading "Rules and Regulations Received".

(3) Violation of rules and regulations applicable to the general public shall be punishable as provided in the ordinance authorizing the issuance or promulgation of such rules and regulations or, in lieu of any more specific provisions, as set forth in Chapter 32 of this Code.

(4) Officers and employees of the City of Quincy who may violate rules and regulations applicable to them in said capacity shall be subject to such sanctions as may be provided by this Code.

ARTICLE X MUNICIPAL PARKING LOTS

Section 13.1001 **Manner of parking** --- Vehicles parking in any parking lot maintained by the city shall be parked in accordance with the painted lines upon the surface of the parking lot.

13.1002 **Vehicles permitted** --- The parking of motor vehicles in the parking lots created shall be limited to passenger automobiles, small panel trucks, pick-up trucks not to exceed three-quarter ton capacity, and station wagons designed and used for the carrying of not more than seven persons; vehicles which are designed and used for pulling or carrying freight and also those vehicles or motor cars which are designated and used for carrying more than seven persons are prohibited from parking in the city parking lots.

13.1003 **Penalty** --- Any person, firm or corporation who violates any of the provisions of this title shall, in addition to such other relief as the law may afford, be punishable as set forth in Chapter 32 of this Code.

ARTICEL XI WATER AND SEWER EXTENSIONS

Section 13.1101 **Non-contiguous lands** --- Upon request for annexation by the owner of land not contiguous to the corporate boundaries of the City of Quincy but whose land is contiguous to land of an area of less than ten (10) acres under one ownership being served by city water or sewers, the owner of each tract or tracts of land aggregating less than ten (10) acres separating such land from the city shall join the land owner desiring the land annexation in a petition for annexation to the City of Quincy and to the Quincy Park District upon payment of the costs of annexation by the land owner requesting annexation. Failure of such intervening land owner or land owners to so join in such petition for annexation shall be deemed sufficient cause to sever the city sewer and water connections to such land. Upon request for annexation by a land owner whose property is not contiguous to the corporate boundaries of the City of Quincy and whose land is not made contiguous by the joining in a petition for annexation by a person or persons whose land is presently served by city sewer or water facilities and whose land is not now served with city water, that such land owner shall, before making any connection with the city sewage or water system, first execute a covenant running with the land obligating himself and his successors in title and all residents hereon to petition at his or their own expense for annexation to the City of Quincy and the Quincy Park District at such time in the future as they may be requested so to do by the City Council of the City of Quincy, Illinois.

13.1102 **Contiguous tracts** --- No new connections shall be made to the city water or sewage system of contiguous tracts not now served with city water or sewers unless such tract is first annexed to the City of Quincy and to the Quincy Park District.

13.1103 **Plan Commission to recommend** --- Upon request for annexation by the owner of land which is not contiguous, to the corporate boundaries of the City of Quincy, the Plan Commission shall recommend to the City Council of the City of Quincy the most practical method, commensurate with the policy set forth herein and with good public relations, of causing such land to become contiguous to the City of Quincy.

ARTICLE XII RIGHT OF ENTRY

Section 13.1201 Whenever it shall be necessary to make an inspection to enforce any ordinance or resolution of the City of Quincy, or whenever there is reasonable cause to believe there exists an ordinance or resolution violation in any building or structure, or upon any premises within the jurisdiction of the city, any authorized official of the City of Quincy may, upon presentation of proper credentials, enter such building, structure or premises at any reasonable time to inspect the same or to perform any duty imposed upon him by ordinance or resolution.

13.1202 Except in emergency situations or when consent of the owner and occupant, if different, has been first obtained, no inspection shall be made pursuant to Section 1 of this article unless the owner and/or occupant, if they can be located after reasonable effort, have been given twenty-four (24) hours prior written notice of the authorized official's intention to inspect. The notice shall state that the property owner has the right to refuse entry, and that in the event such entry is refused, inspection may be made only upon issuance of a search warrant by a judge of the Circuit Court. In the event that the owner or occupant, if different, refuses entry after such request has been made, the official is hereby authorized and empowered to seek a search warrant from the Circuit Court and thereafter proceed in accordance with said warrant to obtain entry to the building, structure or premises.

ARTICLE XIII IMPASSE RESOLUTION

Section 13.1301 Purpose --- It is the public policy and the purpose of this provision to promote the improvement of labor relations between the City of Quincy and the members of any recognized labor organization. It is also the public policy and the purpose of this provision to protect the public health, safety and welfare by assuring at all times the orderly and uninterrupted operations and services of city government.

13.1302 Impasse defined --- Impasse means deadlock in contract negotiations between a certified employee organization and the city's appropriate representative over any matters subject to negotiation.

13.1303 Applicability --- The terms of this provision shall apply equally to any contract negotiation impasse reached between any recognized bargaining representative of the various municipal employees and the City of Quincy.

13.1304 Contract negotiation --- Contract negotiations shall begin at least ninety (90) days prior to the expiration of existing working agreements. If at least fifty (50) days prior to the expiration of the negotiation period a dispute continues to exist either party may request the use of a federal mediator.

13.1305 Dead-lock --- If a dispute continues to exist forty (40) days prior to the expiration of the negotiation period either party may declare a dead-lock at a mutually called meeting, however, neither party may declare a dead-lock prior to forty (40) days before the expiration of the agreement.

13.1306 Final offer --- Upon the declaration of a dead-lock each party shall submit a final best offer of contract within five (5) days of said declaration, (Saturdays, Sundays and holiday excluded), to the chief negotiator of the opposite party.

13.1307 Arbitration --- If after ten (10) days of said declaration a deadlock continues to exist, the parties shall draw for an arbitrator from a mutually agreed list at a mutually called meeting. The party not calling the deadlock shall have its choice as to whether to strike first or second in regard to the list of arbitrators. Upon the selection of an arbitrator, the parties shall submit their written final best offer and may also submit a brief history of that contract's negotiations. The arbitrator shall only hear and decide the unresolved issue or issues. The arbitrator's decision shall be final and binding unless rejected by two thirds (2/3) vote by the members of the City Council present at the council meeting immediately following receipt of the arbitrator's decision. The arbitrator shall grant either the lowest final offer or the highest final offer on each unresolved issue or issues. The arbitrator's expenses shall be shared equally by the parties unless the City Council rejects the arbitrator's decision in which case the city shall bear the entire expense of the arbitrator.

13.1308 Strikes, work stoppages, slowdowns, mass absenteeism and wildcat strikes prohibited --- In order for they City of Quincy to discharge its obligations to provide municipal

functions and protect the health, welfare and safety of its citizens, it is essential that city services continue at all times without disruption. Acceptance of public employment carries with it an obligation and responsibility to act affirmatively at all times to assure the continuation and promotion of the public's health, safety and welfare. Accordingly, all employees and employee representatives organizations are hereby prohibited from engaging in strikes, work stoppages, slowdowns, wildcat strikes or mass absenteeism. Any person who violates this prohibition, shall be subject to any of the following without limitations: reprimand, suspension or discharge of an employee. Where collective bargaining agreement exists, the above provision is applicable.

13.1309 Severability --- If any clause, sentence, paragraph or part of this provision or the application thereof to any person or circumstances shall for any reason be adjudged by a court of competent jurisdiction to be invalid, such judgment shall not effect, impair or invalidate the remainder of this amendment or its application to other persons or circumstances.

ARTICLE XIV ISSUANCE OF ANTI-POLLUTION BONDS AND INDUSTRIAL BONDS

Section 13.1401 **Short title** --- This article may be referred to as the City of Quincy Economic Development and Pollution Control Revenue Bond Enabling Article.

13.1402 **Definitions** --- Whenever used in this article, unless a different meaning clearly appears from the context:

(1) **Bond Ordinance**: Means an ordinance authorizing a specific issue of bonds adopted by the Council of this city in accordance with the policies set forth in this article.

(2) **Economic development project**: Means any land, interest in land, building, structure, facility, system, fixture, improvement, addition, appurtenance, machinery or equipment or any combination thereof, and all real and personal property deemed necessary in connection therewith, for use by any person, provided that the existence of such economic development project will create or retain employment opportunities in or near the city.

(3) **City**: Means the City of Quincy, Adams County, Illinois.

(4) **Person**: Means any individual, partnership, co-partnership, firm, company, corporation (including public utilities), association, joint stock company, trust estate, political subdivision, state agency or any other legal entity, or its legal representative, agent or assigns.

(5) **Pollution**: Means any form of environmental pollution including, but not limited to, water pollution, air pollution, land pollution, solid waste pollution, thermal pollution, radiation, contamination or noise pollution, as determined by the various standards prescribed by the state, the federal government or other government entities and including, but not limited to, anything which is considered as pollution or environmental damage in the Environmental Protection Act, compiled as sections 1001 through 1051 of Chapter 111- ½ Ill. Rev. Stats. 1980, and any amendment thereto and substitution therefore.

(6) **Pollution control facility**: Means any land, interest in land, building, structure, facility, system, fixture, improvement, appurtenance, addition, machinery or equipment, or any combination thereof, and all real and personal property deemed necessary therewith, having to do with or the end purpose of which is, reducing, controlling or preventing pollution.

(7) **Project**: Means any economic development project or pollution control facility or any combination thereof.

(8) **Project costs**: Means and includes the sum total of all reasonable or necessary costs incidental to the acquisition, construction, reconstruction, repair, alteration, improvement and extension of a project including without limitation the cost of studies and surveys, plans, specifications, architectural and engineering services, legal marketing or other special services, financing, acquisition, demolition, construction, equipment and site development of new and rehabilitated buildings, rehabilitation, reconstruction, repair or remodeling of existing buildings and all other necessary or incidental expenses whether directly or indirectly related to the project, including an initial bond and interest reserve, together with interest on bonds issued to finance a project to a date six (6) months subsequent to the estimated date of completion and any costs or expenses which may be included under the provisions of Section 103 (c) of the Internal Revenue Code of 1954, as amended.

13.1403 <u>Legislative declaration of purpose</u> --- It is hereby determined and declared that the purpose of this article is to provide a financing device which will aid in financing the cost of projects in order to relieve conditions of unemployment and to encourage the increase of industry within or near the city, thereby reducing the evils attendant upon unemployment and to provide for the increased welfare and prosperity of the residents of the city; it is hereby further determined and declared to be the purpose of this article to provide a financing device which will aid in financing the cost of pollution control facilities in order to eliminate, abate or reduce the serious dangers to the public health and welfare caused by environmental pollution and the same are hereby declared and determined to be public purpose and functions pertaining to the government and affairs of the city.

13.1404 <u>Additional powers</u> --- In addition to powers, which it may now have, the city shall have the power under this Article:

(1) To construct, acquire by gift, purchase or lease, to reconstruct, improve, better or extend and to finance one or more projects, whether or not now or hereafter in existence, within or without the city or partially within or partially without the city, but in no event further than ten miles from the territorial boundaries of the city, and, if desirable, to acquire by gift, purchase or lease, lands or rights in land in connection with any project.

(2) To issue its revenue bonds to defray in whole or in part the project costs of any project and to designate an appropriate name for such bonds, which bonds shall be issued pursuant to a bond ordinance authorizing the same.

(3) To enter into leases or other agreements with any person in order to secure the city's revenue bonds; provided however, that any such lease or other agreement must provide that such person shall pay to, for or on behalf of the city an amount efficient to pay principal, interest, redemption premiums and all other costs in connection with the city's revenue bonds so that such bonds will never constitute an indebtedness of the city or the loan of its credit within the meaning of any constitutional or statutory provision

(4) To pledge to the punctual payment of bonds authorized under this article, the interest thereon, and the redemption premiums, if any, the revenue and receipts to be received pursuant to such leases or other agreements.

(5) To mortgage such project in favor of the holder or holders of bonds issued therefore.

(6) To sell and convey such project, including without limitation the sale and conveyance thereof subject to a mortgage, if any, as provided in this article, for such price and at such time (whether prior or subsequent to the payment in full of bonds authorized under this article) as the council for the city may determine. However, no sale or conveyance of such project shall ever be made in such manner as to impair the rights or interests of the holder or holders of any bond issued hereunder.

(7) To issue its bonds to refund, in whole or in part, bonds theretofore issued by the city under authority of this Article.

13.1405 <u>Exercise of powers - bonds</u> --- The exercise of all powers granted by this article may be authorized, and such bonds shall be authorized by this article, which may be adopted at the same meeting at which it is introduced and shall take effect immediately upon adoption.

The bonds shall bear interest at such rate or rates payable at such times, may be in one or more series, may bear such date or dates, may mature at such time or times not exceeding 40

years from their respective dates, may be payable in such medium of payment at such place or places, may carry such registration privileges, may be subject to such terms of redemption at such premiums, may be executed in such manner, may contain such terms, covenants and conditions, and may be in such form, either coupon or registered, as the bond ordinance may provide or as may be subsequently determined by the Council before the bonds are issued. The bonds may be sold at public or private sale in such manner and upon such terms as may be deemed advisable by the Council of the city. The bonds and interim receipts of certificates shall be deemed to be securities and negotiable instruments within the meaning and for all purposes of the Uniform Commercial Code.

13.1406 <u>Title to the project</u> --- It shall not be necessary for the city to own or acquire any project or part thereof financed hereunder.

13.1407 <u>Covenants in bonds</u> --- Any bond ordinance may contain such covenants as the city may desire, including but not limited to, covenants as to the following:

(1) The use and disposition of the revenues and receipts from the lease and other agreements or the project for which the bonds are to be issued, including the creation and maintenance or reserves;

(2) The issuance of other or additional bonds relating to the project or any rehabilitation, improvements, renovations, enlargements or additions thereto;

(3) The maintenance and repair of such project;

(4) The insurance to be carried thereon and the use and disposition of insurance moneys;

(5) The appointment of any bank or trust company within or outside the State of Illinois, having the necessary trust powers as trustee for the benefit of the bondholders, paying agent and bond registrar;

(6) The investment of any funds held by such trustee; and

(7) The terms and conditions upon which the holders of the bonds or any portion thereof or any trustees thereof are entitled to the appointment of a receiver.

The bond ordinance may provide that the principal of and interest on the bonds shall be secured by a mortgage or indenture of trust covering such project for which the bonds are issued and may include any improvements or extensions thereafter made. Such mortgage or indenture of trust may contain such covenants and agreements to properly safeguard the bonds and shall be executed in the manner as may be provided for in the bond ordinance. The provisions of this Article and the bond ordinance and any such mortgage or indenture of trust shall constitute a contract with the holder or holders of the bonds and continue in effect until the principal of, the interest on, and the redemption premiums, if any, on the bonds so issued have been fully paid, or until provision for payment shall have been made as provided in the bond ordinance, and the duties of the city and its corporate authorities and officers under this Article and any bond ordinance and any such mortgage or indenture of trust shall be enforceable by any bondholder by mandamus, foreclosure of any such mortgage or indenture of trust or other appropriate suit, action or proceedings in any court of competent jurisdiction, in the manner and subject to the terms of such bond ordinance, mortgage or indenture of trust.

13.1408 <u>Signatures of officers on bonds - validity of bonds</u> --- The bonds shall bear the manual or facsimile signature of such officers of the city as may be designated in the bond

ordinance and such manual or facsimile signatures shall be the valid and binding signatures of the officers of the city, notwithstanding that before the delivery thereof and payments therefore any or all of the persons whose signatures appear thereon have ceased to be officers of the city. The validity of the bonds is not dependent on or affected by the validity or regularity of any proceedings relating to the acquisition, purchase, construction, reconstruction, improvement, equipping, betterment or extension of the project for which the bonds are issued. The bond ordinance may provide that the bonds shall contain a recital that they are issued pursuant to this Article, which recital shall be conclusive evidence of their validity and of the regularity of their issuance.

13.1409 Lien of bonds --- All bonds issued under this Article have a lien upon the revenues and receipts derived from such lease or other agreement, and the Council may provide in the bond ordinance for the issuance of additional bonds to be equally and ratably secured by a lien upon such revenues and receipts or may provided that the lien upon such revenues and receipts is subordinate.

13.1410 Liability for bonds --- All bonds issued under and pursuant to this article shall be limited obligations of the city payable solely out of the revenues and receipts derived from such lease or other agreement. No holder of any bonds issued under this article has the right to compel any exercise of taxing power of the city to pay the bonds, the interest or premium, if any, thereon, and the bonds do not constitute an indebtedness of the city of a loan of credit thereof within the meaning of any constitutional or statutory provision. It shall be plainly stated on the face of each bond that it has been issued under the provisions of this article and that it does not constitute an indebtedness of the city or a loan of credit thereof within the meaning of any constitutional or statutory provisions.

13.1411 Investment of funds --- The city or any trustee on behalf of the city may invest any funds held by it pursuant to this Article in:

(1) Any bonds or other obligation which as to principal and interest constitute direct obligations of or are unconditionally guaranteed by the United States of America;

(2) Obligations of the Federal National Mortgage Association;

(3) Obligations of the Federal Intermediate Credit Banks;

(4) Obligations of Federal Banks for Cooperatives;

(5) Obligations of Federal Land Banks;

(6) Obligations of Federal Home Loan Banks;

(7) Obligations of the Federal Financial Bank;

(8) Time certificates of deposit of banks organized under the laws of any state of the United States and national banks which have a combined capital and surplus of at least $5,000,000; and

(9) Any other investments to the extent then permitted by Illinois law.

Any such securities may be purchased at the offering or market price thereof at the time of such purchase.

13.1412 Exemption from construction and bidding requirements for public buildings --- The acquisition and construction of a project shall not be subject to any requirements relating to

public buildings, structures, grounds, work or improvements imposed by the Illinois Revised Statutes or any other similar requirements which may be lawfully by this section, and any requirement of competitive bidding or restriction imposed on the procedure for award of contracts for such purpose of the lease, sale or other disposition of property of the city is not applicable to any action taken under authority of this Article.

13.1413 <u>Powers conferred as additional and supplemental limitations imposed - effect</u> --- The powers conferred by this Article are in addition and supplemental to, and the limitations imposed by this article shall not affect, the powers conferred by any law or any other ordinance. Projects may be acquired, purchased, constructed, reconstructed, improved, bettered, equipped, extended and financed, and bonds may be issued under this article for such purposes, not withstanding that any law or any other ordinance may provide for the acquisition, purchase, construction, reconstruction, improvement, equipping, betterment, extension, and financing of a like project, or the issuance of bonds for the like purposes, and without regard to the requirements, restrictions, limitations or other provisions contained in any law or any other ordinance.

13.1414 <u>Severability clause</u> --- The provisions of this Article are severable and if any of its provisions or any sentence, clause or paragraph shall be held unconstitutional by any court of competent jurisdiction, the decision of such court shall not affect or impair any of the remaining provisions.

13.1415 <u>Service fee to city</u> --- Except as hereinafter provided, the City of Quincy shall be entitled to a service fee at the rate of one percent (1%) of the total amount of bonds authorized to be issued by a bond ordinance adopted and approved hereunder. Where an organization exempt from taxation under 501(c)(3) of the Internal Revenue Code of 1954 is the party obligated under a lease or other agreement to provide receipts and revenues to the city for payment of the principal, interest, and other costs of said bonds, then no service fee shall be imposed in connection with the issuance of said bonds. Any service fee to which the city is entitled shall be paid to the City Treasurer within thirty (30) days after adoption and approval of the applicable bond ordinance.

ARTICEL XV ETHICS

Division 1
State Gift Ban Act

Section 13.1501 <u>Adoption of Act</u> ---

(1) The State Gift Ban Act (5 ILCS 425 et. seq.) (herein "Act") is hereby adopted as required by Section 83 of Act (5 ILCS 425/83).

(2) The solicitation or the acceptance of gifts prohibited by any elected or appointed official or any employee of the city.

(a) **Exception**: All non-salaried appointed or elected officials are exempted from the Act and the provisions of this ordinance.

13.1502 <u>Ethics Officer</u> --- To the extent authorized by law and to the extent required by Section 35 of the Act (5 ILCS 425/35), Director of Human Resources is appointed to serve as the "Ethics Officer" of the city. The Ethics Officer's duties shall be as provided in Section 35.

13.1503 <u>Local Ethics Commission - complaints</u> ---

(1) To the extent authorized by law and to the extent required by the Act, the Mayor shall appoint three (3) persons to a Local Ethics Commission with the advice and consent of the City Council.

(a) **Qualifications**:

1.) No member of the Local Ethics Commission shall be an elected or appointed official, or an employee of the city. The Corporation Counsel, however, or his or her designee, shall serve as an ex-officio, non-voting member of the Commission.

2.) Not more than two members if the Commission shall belong to the same political party existing in the city at the time of such appointments and as defined in Section 10-2 of the Illinois Election Code, party affiliation shall be determined by affidavit of the person appointed as a member to the Commission.

3.) Notwithstanding any law, rule or regulation to the contrary, all members shall be required to annually file a "statement of economic interest" in the form provided in the Illinois Governmental Ethics Act (5 ILCS 420/4A-106). No member shall have any financial interest, directly or indirectly, in the name of any other person, association, trust or corporation, in any contract, work or business of the city in an amount exceeding $1,000.00.

4.) Members of the Commission shall not, during their term of office, directly or indirectly, give or hand over to any officer or employee or employee of the city, any money or other valuable thing on account of or to be applied to the promotion of any party or political object or purpose whatever

(b) **Term**: The members of the Commission shall serve for a term of three (3) years or until their successor are duly appointed and qualified, provided, however, that the terms of the initial members shall be staggered annually for terms of one, two and three years, respectively. One of the members shall be designated by the Mayor as chairman of the Commission.

(c) **Meetings**: Meetings of the Commission shall be held at the call of the chairman and at such other times as a majority of the Commission shall determine, and at such other times as required by the Act.

(d) **Conflict - temporary appointment**: Any member of the Commission who shall have a direct or indirect interest, by virtue of a personal, family, economic or other relationship, with the subject of or in the outcome of a complaint filed with the Commission shall disclose such interest and shall be disqualified from participating in any proceedings of the Commission with respect to said complaint. In the event, as a result of any such conflicts and disqualification, less than a majority of the members of the Commission remain qualified to hear the complaint, the Mayor shall appoint a temporary member or members, as necessary, to serve in lieu of said disqualified member or members for all proceedings related to the complaint which has resulted in such conflict or disqualification.

(2) The local Ethics Commission shall have the power and duties set forth in Section 55 of the Act.

(3) To the extent that any of its provisions may be applicable, Section 45 of the Act shall be applicable to the local Ethics Commission.

(4) The complaint procedure and the enforcement and penalty provisions of the Act and this ordinance shall be as are provided in Sections 60, 65 and 70 of the Act.

13.1504 <u>Existing ethics ordinance or gift ban ordinance</u> --- The ordinance does not repeal or otherwise amend or modify Section 16.1626 (gifts) of the Code, which regulates the conduct of city officials and employees with respect to purchasing or bidding. To the extent that Section 16.1626 is less restrictive than the State Gift Ban Act and this ordinance, then the provisions and this ordinance shall prevail in accordance with the provisions of Section 95 of the Act (5 ILCS 425/95).

13.1505 <u>Future amendments to State Gift Ban Act</u> --- Any amendments to the State Gift Ban Act (5 ILCS 425/1 et seq.) that becomes effective after the passage of this ordinances shall be incorporated into this ordinance by reference and shall be applicable to the solicitation and acceptance of gifts. However, any amendment that makes its provisions optional for adoption by municipalities shall not be incorporated into this ordinance by reference without formal action by the corporate authorities of the city.

ARTICEL XVI PURCHASING-BIDDING

Division 1
General Provisions

Section 13.1601 **Short title** --- This Section may be referred to as and cited as "The City of Quincy Purchasing Manual".

13.1602 **Purpose of purchasing manual** --- The underlying purposes and policies of this purchasing manual are:

(1) To specify, clarify, and modernize the rules governing procurement by the city;

(2) To ensure the fair and equitable treatment of all persons who deal with procurement system of the city;

(3) To foster effective broad based competition within the free enterprise system;

(4) To provide safeguards for the maintenance of a procurement system of quality and integrity; and

(5) To maximize to the fullest extent possible the purchasing value of the public funds of the city.

13.1603 **Definitions** --- For the purposes of this purchasing manual, the following definitions shall apply unless the context clearly indicates or requires a different meaning.

(1) **Agencies**: City offices, department, boards, committees, councils and commissions.

(2) **Business**: Any corporation, partnership, individual, sole proprietorship, joint stock company, joint venture, or any other private legal entity.

(3) **Competitive sealed bidding**: The process whereby the Purchasing Director accepts sealed bids after public notice by newspaper advertisement.

(4) **Construction**: The process of building, altering, repairing, improving, or demolishing of any structure or building, or other public improvements of any kind to any real property but not including the routine operation, routine repair, or routine maintenance of existing structures, buildings, or real property.

(5) **Contract**: All types of agreements, regardless of what they may be called, for the procurement of disposal or supplies, services or construction.

(6) **Contract modifications**: Any written alteration in specifications, delivery point, rate of delivery, period of performance, price, quantity, or other provisions of any contract accomplished by mutual action of the parties to the contract.

(7) **Contractor**: Any persons having a contract with the city.

(8) **Person**: Any business, individual, union, committee club, other organization, or group of individuals.

(9) **Procurement**: Buying, purchasing, renting, leasing, or otherwise acquiring any supplies, services, of construction, including all functions that pertain to the obtaining of any supply, service, or construction, such as description of requirements, selection and solicitation of sources, preparation and award of contract, and all phases of contract administration, construction.

(10) **Contractual services**: The furnishing of labor, time, or effort by a contractor, not involving the delivery of a specific end product other than reports which are merely incidental to

the required performance, but not including employment agreements or collective bargaining agreements.

(11) **Supplies**: All property, including but not limited to equipment, computer equipment, software, utilities, materials, commodities, telecommunications equipment and services, and leases of real property, excluding land or a permanent interest in land. The word supplies includes both capital and operational needs.

Division 2
Department of Purchasing

13.1604 <u>Purchasing Director</u> --- The Department of Purchasing shall be headed by a Purchasing Director, appointed by the Mayor with the advice and consent of the City Council. The Purchasing Director or his representative shall have the responsibility to assist in all purchasing activities of the City of Quincy. The Purchasing Director can delegate authority to department heads in the procurement process.

13.1605 <u>Powers and duties</u> --- Without limiting those powers and duties prescribed by law and ordinance, the Department of Purchasing shall:

(1) Purchase supplies, services and construction for all agencies of the city.

(2) Exercise general supervision and control over all inventories of supplies belonging to the city.

(3) Sell, trade, or otherwise dispose of surplus supplies belonging to the city.

(4) Establish and maintain programs for the inspection, testing and acceptance of supplies, services and construction.

(5) Open all bids submitted to the city.

(6) Make recommendations to the City Council concerning the awarding of contracts for which bids have been received.

(7) Distribute or cause to be distributed to the various requesting agencies of the city such supplies as may be purchased by the department.

(8) Transfer supplies to or between the various requesting agencies of the city.

(a) The Purchasing Director shall be empowered to:

1.) Adopt, promulgate and from time to time revise rules and regulations, consistent with the purchasing manual, governing the management, procurement, control and disposal of any and all supplies, services and construction to be procured by the city.

2.) Assume such related activities as may be assigned by the Mayor or the City Council.

3.) Place all advertisements for bids.

(9) Have authority to approve and authorize the trade-in of supplies (as defined above) or other personal property of the city for credit or part payment against the cost of procuring similar property. The Purchasing Director may approve and such trade-in of property, without competitive bidding, provided: (a) the cost of the procurement (excluding the value of the trade-in) does not exceed $3,000.00; (b) the Purchasing Director has made a good faith determination that the trade-in credit is substantially equivalent to the fair market value of the supplies or property being traded; and (c) the procurement of the replacement property or supplies (and the trade-in) are in the best interests of the appropriate department and the city.

Division 3
Specifications

13.1606 <u>Preparation</u> --- The Purchasing Director shall have general responsibility for and supervision of the preparation of all contract specifications. The Purchasing Director may seek the assistance, direction, suggestions and recommendations of appropriate department heads or other employees or agents of the city, in preparation of specifications and may delegate contract specification preparation responsibilities as necessary and appropriation.

13.1607 <u>Standard</u> ---

(1) **Generally**: All specification shall be prepared so as to promote overall economy for the purposes intended and encourage competition in meeting the needs of the city and shall not be unnecessarily restrictive. Specifications should consist of a description of the physical or functional characteristics or nature of the supply, service or construction item. Specifications may include a description of any requirement for inspecting, testing, or preparing a supply, service or construction item for delivery.

(2) **Prevailing wage certification - public works**: All contracts for public works for which the prevailing wage rate is required to be paid by law, and which are funded and paid for from funds of the City of Quincy, shall include provision requiring such contractors to provide to the City of Quincy such documentation and information as may be required by the city to verify compliance with said prevailing wage laws, including by way of example, but not necessarily limited to, dates and times during which employees of the contractor were employed for the project, as well as, certified statements of payroll (as required by the Illinois Department of Labor) of all employees that perform work on such projects. Any contractor failing to provide the information and records in accordance with this ordinance, may in addition to such other penalties as may be prescribed by contract or by law, be barred from bidding upon construction projects using city funds for a period of two years and may be subject to penalty as provided and as set forth in Chapter 32 of this Code.

Division 4
Source Selection and Contract Formation

13.1608 <u>Method of source selection</u> --- All city contracts involving amounts in excess of $10,000.00 shall be awarded by competitive sealed bidding, pursuant to Section 13.1609, except (a) as otherwise authorized by a vote of two thirds of all aldermen then holding office; or (b) as otherwise specifically provided herein, including Sections 13.1615, 13.1616, 13.1617, 13.1619, and 13.1620.

13.1609 <u>Sealed competitive bidding</u> --- City contracts shall be let by competitive sealed bidding after advertisement to the lowest responsible bidder.

13.1610 <u>Advertisement for bids - deposits</u> -- - All proposals to award contracts involving amounts in excess of $10,000.00 shall be published at least 10 days, in advance of the date announced for the receiving of bids, in a daily newspaper of general circulation throughout the

city and shall simultaneously be posted on readily accessible bulletin boards in the office of the Purchasing Director. Nothing contained in this section shall be construed to prohibit the Purchasing Director from placing additional announcements in recognized trade journals or other appropriate advertising media. Advertisements for bids shall describe the character of the proposed contract or agreement in sufficient detail to enable the bidders thereon to know what their obligations will be, either in the advertisement itself, or by reference to detailed plans and specifications on file at the time of the publication of the first announcement. Such advertisements shall be received at any time subsequent to the time indicated in the announcement. However, any extension of time may be granted for the opening of such bids upon publication in a daily newspaper of general circulation throughout the city of the date of which the bid opening has been extended. The time of the bid extension opening shall not be less than 5 days after the publication thereof. Cashier's check, a certified check or a bid bond, as a deposit of good faith, in a reasonable amount but not in excess of 10% of the contract amount may be required of each bidder by the Purchasing Director in all bids involving amounts in excess of $10,000.00 and, if so required, the advertisement for bids shall so specify.

13.1611 Opening of bids --- All sealed bids shall be publicly opened by a committee consisting of the Purchasing Director of the city, the City Clerk and the head of the department of the appropriate department concerned with the bid, or duly designated representative or designee of such officials. The attendance of a minimum of two of said bid opening committee shall be required at the bid opening. All such bids shall be open to public inspection. The Purchasing Director shall submit his recommendation and evaluation regarding the bids to the City Council, or, in the discretion or judgment of the Purchasing Director (or as otherwise required by the City Council) to the appropriate or designated committee of the City Council having responsibility for review and evaluation of the contracts being bid.

13.1612 Awarding of contracts - filing of purchase order or contract public inspection --- The award of any contract involving amounts in excess of $10,000.00 shall be made by the City Council to the lowest responsible bidder. Each bid, with the name of the bidder, shall be entered on a record which record, with the name of the successful bidder indicated thereon, shall after award of the contract, be open to public inspection in the office of the Purchasing Director. An official copy of each awarded contract together with all necessary attachments, including assignments shall be retained by the Purchasing Director in an appropriate file open to public inspection.

13.1613 Lowest responsible bidder --- In determining the lowest responsible bidder, in addition to the price of the bid, the following factors may be considered:

(1) The ability, capacity and skill of the bidder to perform the contract or provide the service required.

(2) Whether the bidder can perform the contract or provide the work promptly, or within the time specified, without the delay or interference.

(3) The character, integrity, reputation, judgment, experience and efficiency of the bidder.

(4) The quality of the performance of previous contracts or work of the bidder.

(5) The previous and existing compliance by the bidder with laws and ordinances relating to the contract to work.

(6) The financial responsibility and resources of the bidder.

(7) The quality, availability, and adaptability of the supplies or laborers of the bidder for the particular requirements of the contractor work.

(8) The ability of the bidder to provide future maintenance and service for the use of the subject of the contract.

(9) The resale value of any equipment of personal property provided under the contract.

(10) The number and scope of any conditions attached to the bid.

(11) Such other factors or circumstances as may fairly and reasonable reflect on a bidder's ability or responsibility to perform the contract.

13.1614 <u>Rejection of bids</u> --- Any and all bids received in response to and advertisement may be rejected by the City Council.

13.1615 <u>Small purchases</u> ---

(1) **Generally**: Any procurement not exceeding $10,000.00 may be made in accordance with the small purchases procedure authorized in this section. Procurement requirements shall not be artificially divided or separated so as to merely qualify as a small purchase.

(2) **Small purchases over $3,000.00**: Except as otherwise provided herein, or by city ordinance, contracts or procurements of small purchases in excess of $3.000.00 may only be awarded or made upon approval by the City Council after "solicitation of quotations" or requests for "sealed proposals" as provided hereafter.

(a) **Solicitation of quotations**: The Purchasing Director shall solicit quotations in the manner provided in Section 13.1616 below, and shall make a recommendation to the City Council and/or appropriate committee of the Council as to the lowest acceptable quotation.

(b) **Requests for sealed proposals**: In lieu of solicitation of quotations, the Purchasing Director may request sealed proposals in the manner provided in Section 13.1617 below, when the Director determines that sealed proposals would be more advantageous to the city and provide for preferable competition. The Director shall make a recommendation to the City Council and/or appropriate committee of the Council as to the lowest acceptable and responsible proposal.

(3) **Small purchases under $3,000.00 but over $1,000.00**: Small purchases under $3,000.00 but over $1,000.00, may be made by the Purchasing Director by solicitation of quotations as provided in Section 13.1616 below. The procurement shall be made from the business offering the lowest acceptable quotation.

(4) **Small purchases under $1,000.00**: The Director of Purchasing may implement operational procedures for making of small purchases of less than $1,000.00, including purchases by department heads. Such operational procedures shall, however, provided for obtaining adequate and reasonable competition for the supply, service, or construction being purchased and shall include the preparation and maintenance of records adequate to document the competition obtained, and accounting of funds expended.

13.1616 <u>Solicitation of quotations</u> --- To the extent practical for "small purchases" as provided in Section 13.1615, the Purchasing Director shall solicit at least three (3) competitive quotations. Quotations may be solicited by mail, telephone or posting of a notice at City Hall. The

Purchasing Director shall maintain a record of such quotations, including the name and address of the business and the date and amount of the quote.

13.1617 <u>Request for sealed proposals</u> ---

(1) **Condition for use**: When the Purchasing Director determines that the use of competitive sealed bidding is either not practicable or not advantageous to the city, a contract may be entered into by use of the request for sealed proposals method. By way of illustration only, the lack of sufficient time or information to prepare specification suitable for competitive bidding may warrant the more general request for proposals from prospective contractors. As a further example, solicitations permitting a range of alternative proposals and the possibility for evaluation and discussion of proposals before making an award may, under some circumstances (for example, computer software programs), be better suited to meeting procurement needs than sealed competitive bidding.

(2) **Requests for proposals**: Proposals shall be solicited through a request for proposals.

(3) **Public notice**: Adequate public notice of the request for proposals shall be given in the same manner as provided in Section 13.1610 (advertisement for bids) but the Purchasing Director shall have the discretion and authority to solicit proposals by direct mail.

(4) **Receipt of proposals**: No proposals shall be handled so as to permit disclosure of the identity of any offeror or the contents of any proposal to competing offerors during the process of negotiation. A register of proposals shall be prepared containing the name of each offeror, the number of modifications received if any, and a description sufficient to identify the proposal. The register of proposals shall be for public inspection only after contract award.

(5) **Evaluation factors**: The request for proposals shall state the relative importance of price and other relevant evaluation factors.

(6) **Discussion with responsible offerors and revisions to proposals**: As provided in the request for proposals, discussions may be conducted with responsible offerors who submit proposals determined to be reasonably susceptible of being selected for award for the purpose of clarification to assure full understanding of, and conformance to, the solicitation requirements. Offerors shall be accorded fair and equal treatment with respect to any opportunity for discussion and revision of proposals and such revisions may be permitted after submissions and prior to award for the purpose of obtaining best and final offers. In conducting discussions, there shall be no disclosure of the identity of competing offerors or of any information derived from proposals submitted by competing offerrors.

(7) **Award**: The Purchasing Director and/or appropriate committee of the City Council shall make a recommendation as to the responsible offeror whose proposal is determined to be the most advantageous to the city, taking into consideration price and the evaluation factors set forth in the request for proposals.

13.1618 <u>Sole source procurement</u> --- A contract in excess of $3,000.00 may be awarded by the City Council for a supply, service or construction item without competition when, under regulations promulgated by the Purchasing Director, the Purchasing Director determines after a good faith review of available sources that there is only one source for the required supply, service or construction item.

13.1619 Emergency contracts --- Whenever an emergency threatening the public health and safety exists, contracts in excess of $3,000.00 may be let to the extent necessary to resolve such emergency without sealed competitive bidding, but a written report of such action shall be presented to the City Council at its next regular meeting.

13.1620 Professional services --- Contracts for the services of individuals possessing a high degree of professional skill where the ability or fitness of the individual plays a important role shall not be subject to sealed competitive bidding.

13.1621 Assignment of contracts --- No contract shall be assignable or sublet by the successful bidder without the consent of the City Council.

13.1622 Modification of contracts --- Any contract modification of a contract involving the expenditure of more than $3,000.00 shall be approved by the City Council.

Division 5
Miscellaneous Purchasing Authority

13.1623 Joint purchasing --- The Department of Purchasing is authorized to purchase supplies in cooperation with the State of Illinois pursuant to "An act authorizing certain governmental units to purchase personal property, supplies, and services jointly". Ill. Compiled Statues, par 515/1 et seq. as now or hereafter amended.

Division 6
Conflict of Interest

13.1624 Purchasing - Illinois Department of Corrections -- Notwithstanding anything herein to the contrary, and in lieu of the small purchases procedures provided above (section 13.1616), the Purchasing Director shall have the authority to purchase articles, materials and supplies which are produced or manufactured by persons confined by the Illinois Department of Corrections in accordance with the State of Illinois Unified Code of Corrections for purchases not exceeding $3,000.00, provided the Purchasing Director shall determine in writing that such purchases or procurement from the Illinois Department of Corrections is in the best interests and advantage of the city.

13.1625 Pecuniary interest in contracts -- Except as authorized by law, no city officer shall be interested directly or indirectly, in his own name or, in the name of any other person, association, trust or corporation, in any contract work or business of the city, or in the sale of any article, whenever the expense, price or consideration of the contract, work business, or sale is paid either from the treasury or by any assessment levied by any statute or ordinance. Except as authorized by law, no city officer shall be interested, directly or indirectly, in the purchase of any property which (1) belongs to the City, or (2) is sold for taxes or assessments or (3) is sold by virtue of legal process as the suit of the City.

13.1626 **<u>Gifts</u>** **---** No officer or employee of the city shall accept directly or indirectly from any person to which a contract is or might be awarded any rebate gift, money or anything of value which is intended in any manner to influence the award of the City contract.

ARTICLE XVII BUDGET SYSTEM

Section 13.1701 **Adoption** --- The city hereby adopts paragraphs 8-2-9.1 through 8-2-9.10 inclusive of the Illinois Municipal Code (Illinois Compiled Statutes 65 ILCS 5/8-2-9.1 - 8-2-9.10) by a vote of two-thirds of the City Council holding office, and an annual budget shall be prepared, have the effect, and be in lieu of an annual appropriation ordinance as provided by law.

13.1702 **Fiscal year** --- The city hereby adopts May 1st through April 30th as the "fiscal year" of the city.

13.1703 **Budget officer** --- The Comptroller shall serve, ex-officio, as the "budget officer" of the city and shall have the powers, duties and responsibilities set forth in 65 ILCS 5/8-2-9.2 of the Illinois Municipal Code, as now or hereafter amended.

13.1704 **Budget document** --- Budget documents mean a printed booklet or booklets containing the city's annual budget and such other information as the Mayor, Director of Administrative Services or the City Council deem desirable.

13.1705 **Annual budget; contents** --- The "annual budget" shall be:

(1) The estimates of revenues available to the city for the fiscal year for which the budget is drafted;

(2) The recommended expenditures for the city and all the city's departments, commissions and boards for the fiscal year for which the budget is drafted;

(3) Actual or estimated revenues and expenditures for the two (2) years immediately preceding the fiscal year for which the budget is prepared.

13.1706 **Annual budget; format** ---

(1) Revenue estimates and expenditure recommendations in the annual budget shall be presented in a manner which is in conformity with good fiscal management practices. So far as is possible, the fiscal data for the two (2) preceding fiscal years required to be included in the annual budget shall be itemized in a manner which is in conformity with a chart of accounts payable in accordance with good fiscal management practices. The annual budget shall show the specific fund from which each anticipated expenditure shall be made.

(2) The annual budget may be presented with other information which provides information useful to the budget process but such other information shall not be considered part of the actual annual budget.

13.1707 **Annual budget - Administrative transfers, revisions or amendments** ---

(1) The Director of Administrative Services and Budget Officer may delete or create revenue and expense codes, reduce or increase amounts reflected in the annual budget for expense codes through transfer of money between expense codes within the budget activities and funds within each department or budgeted fund; provided, however; that the authorized expenditure limit of any such department or fund, exclusive of any contingency appropriation, is not exceeded and the annual budget is not increased except when offset by an equal amount of unbudgeted revenue for that department or fund. The Director of Administrative Services and

Budget Officer may approve an increase in the authorized expenditure limit for a fund or the annual budget for a department that is offset by unbudgeted revenue to that fund or department provided the increase represents payment for unbudgeted expenditures on services, supplies, materials and/or overtime incurred or to be incurred by that department, and does not exceed ten thousand dollars ($10,000.00) per occurrence. The Budget Officer shall make a report to the City Finance Committee of amendments or transfers, as provided in this Section, not less than monthly, or as otherwise requested by the Finance Committee.

13.1708 <u>Annual budget - Council transfers, revisions or amendments</u> --- The City Council may amend the annual budget by deleting, adding to, changing or creating object classes or subclasses by a two-thirds vote of the members of the Council then holding office, which shall include the right to transfer funds between departments, provided no such transfer, revision or amendment shall be made increasing the budget in the event funds are not available to effect the purpose of such revision.

13.1709 <u>Contingency funds</u> --- The annual budget may contain money set aside for contingency purposes not to exceed ten percent of the total budget, less the amount set aside for contingency purposes, which monies or funds may be expended for contingencies upon a majority vote of the Council members then holding office.

13.1710 <u>Annual budget; prior inspection; public hearing</u> ---

(1) At least twenty-one (21) days prior to its adoption by Council, the annual budget as proposed by the Director of Administrative Services and Budget Officer for Council approval shall be available for public inspection by delivering a copy of the proposed annual budget for public display to the City Clerk's and City Comptroller's office. At the time the proposed annual budget is delivered to the City Clerk and made available for public inspection at the City Comptroller's office, a copy shall be sent to each Council member by the Budget Officer.

(2) The Council shall conduct at least one public hearing on the proposed annual budget. A public hearing shall be conducted by the Council no sooner than one week after the filing of the proposed annual budget with the City Clerk and availability at the Comptroller's office, as provided above. Notice of this public hearing shall be published in a newspaper of general circulation in the city at least seven (7) days prior to the time of the public hearing.

13.1711 <u>Annual budget; filing with County Clerk</u> --- The Budget Officer shall file a certified copy of the annual budget and an estimate of the anticipated revenues to be received in the following fiscal year by source certified by the Budget Officer with the County Clerk within thirty (30) days of the adoption of the annual budget by the Council.

CHAPTER 14

STREETS AND SIDEWALKS

ARTICLE I **GENERAL PROVISIONS**

ARTICLE II **DRIVEWAYS**

ARTICLE III **EXCAVATIONS**

ARTICLE IV **TREES AND SHRUBBERY**

ARTICLE V **SIGNS, AWNINGS & SIMILAR DEVICES**

ARTICLE VI **SUBSIDEWALK SPACE**

ARTICLE VII **SNOW REMOVAL**

ARTICLE VIII **STREET CLEANING**

ARTICLE I GENERAL PROVISIONS

Section 14.101 **Supervision** --- All public streets, alleys, sidewalks and other public ways in the city shall be under the supervision of the Superintendent of Street and Bridge.

14.102 **Construction** --- It shall be unlawful to construct or lay any pavement on any public street, sidewalk, alley or other public way, or to repair the same without first having secured a permit therefore. Applications for such permits shall be made to the City Engineer and shall state the location of the intended pavement or repair, the extent thereof, and the person or firm who is to do the actual construction work. No such permit shall be issued except on order of the Council.

14.103 **Bond** --- Each applicant shall file a bond in the amount of five thousand dollars, with surety to be approved by the Council, conditioned to indemnify the city for any loss or damage resulting from the work undertaken or the manner of doing the same.

14.104 **Specifications** --- All street and sidewalk pavement shall be made in conformity with specifications laid down or approved from time to time by the Council.

14.105 **Injury to new pavements** --- It shall be unlawful to walk or drive upon or drive any vehicle or animal up, or injure any newly laid street or sidewalk pavement while the same is guarded by a warning sign or barricade, or to knowingly injure any soft or newly-laid pavement.

14.106 **Repairs** --- All public streets, alleys and sidewalk pavement shall be kept in good repair. Such repair work, whether done by the city or by the abutting owner, shall be under the supervision of the Superintendent of Street and Bridge.

14.107 **Defects** --- It shall be the duty of every city officer or employee becoming cognizant of any defect in my street, alley or sidewalk, or any obstruction thereof, to report the same to the Superintendent of Street and Bridge as soon as possible.

14.108 **Obstruction** --- It shall be unlawful for any person, firm or corporation to cause, create or maintain any obstruction of any street alley or sidewalk or other public way except as may be specifically authorized by ordinance or by the Superintendent of Street and Bridge.

14.109 **Barricades** --- Any person, firm or corporation laying or repairing any pavement on a street, sidewalk or other public place, or making or maintaining an excavation in any such place, shall maintain suitable barricades to prevent injury to any person or vehicle by reason of such work or excavation and such barricades shall be adequately protected by lights at night time.

14.110 **Disturbing barricades** --- It shall a unlawful to disturb or interfere with any barricade or lights lawfully placed to protect or mark any new pavement or excavation or opening in any public street, alley or sidewalk.

14.111 <u>Private use</u> --- It shall be unlawful for any person, firm or corporation to use any street, sidewalk or other public place as space for the display or sale of goods or merchandise, or to erect or mark any signs or advertisements on any such public place except upon permit from the City Council.

14.112 <u>Encroachments</u> --- It shall be unlawful to erect or maintain any building, structure or object which encroaches upon any public street, sidewalk or property except upon special permit from the City Council.

(1) **Fence encroachments-registration**: Subject to the terms, conditions and restrictions hereof, the owner of any fence which as of July 1, 1997, was so located as to encroach upon any city right-of-way, may register said encroaching fence with the City Department of Planning & Development, within ninety (90) days of the effective date of this ordinance (August 17, 1997). The Department of Planning & Development shall issue a permit or such encroachment, without separate approval by the City Council, subject to the following conditions:

(a) The encroaching fence shall not encroach upon any surfaced street or sidewalk;

(b) The location and construction of the fence shall not otherwise create a risk to public safety;

(c) The owner or owners of the property upon which the fence is located shall execute and deliver to the Department of Planning and Development, a revocable license permit agreement, in a form to be provided by the city, which license permit shall minimally include provision that the owner agree to:

1) Indemnify the city against liability arising or resulting from the encroachment; and

2) Remove or relocate the fence, at the owner's cost and expense, as may be required for the city's subsequent temporary or permanent access to or use of all or any portion of the right-of-way upon which the fence is located.

14.113 <u>Injury</u> --- It shall be unlawful to injure any sidewalk, street or alley pavement.

14.114 <u>Deposits on streets</u> --- It shall be unlawful to deposit on any street or alley any material which may be harmful to the pavement thereof, or any waste material, or any glass or other articles which may do injury to any person, vehicle, animal or property. Lots shall be so graded and seeded so as to prevent wasting of mud or dirt on any street.

Coal or other materials may be deposited in streets preparatory to delivery or use provided such deposit does not reduce the useable width of the roadway at that point to less than eighteen feet; provided further that such material or coal, other than material to be used in actual building construction, shall not be permitted to remain on such street for more than three hours.

Any such material or coal shall be guarded by lights if the same remains upon any street after night time.

14.115 <u>Deposits on sidewalks</u> --- It shall be unlawful to deposit on any public sidewalk any material which may be harmful to the pavement thereof, or any waste material, or any glass or other articles which might cause injury to persons, vehicles, animals or property.

Merchandise or other articles may be deposited on sidewalks preparatory to delivery provided the useable width of the walk is not thereby reduced to less than four feet; and provided further than no such article shall remain on such walk for more than one hour.

14.116 Drains --- It shall be unlawful to obstruct any drain in any public street or alley.

14.117 Poles and wires --- It shall be unlawful to erect or maintain any poles or wires on or over any public streets, alley or other public way without having first secured permission from the Council.

14.118 Gas pumps --- It shall be unlawful to maintain or erect any gasoline pump or tank in any public street, alley or sidewalk without having first obtained a permit therefore from the Council.

14.119 Games --- It shall be unlawful to play any games or engage in any recreational activity upon the streets, alleys or sidewalks of the city where such games or activity cause unnecessary noise or interfere with traffic or pedestrians.

14.120 Openings --- It shall be unlawful to construct any opening or stairway in any public street, sidewalk of alley without a permit from the Council. All such openings shall be guarded by a suitable strong cover or a railing which meets with the reasonable approval of the Superintendent of Streets.

14.121 Barbed wire fences, etc. --- It shall be unlawful to maintain or construct any fence composed in whole or in part of barbed wire, or of any material designed to cause injury to persons, or any wire charged with electric current, within three feet of any public street, sidewalk, alley, park or other public place.

14.122 Hoisting materials in streets --- It shall be unlawful for any person in said city without first procuring a permit from the Building Inspector to hoist on the outside of any building, over any street, sidewalk, alley or thoroughfare any merchandise, grain or other material or article and before issuing any such permit, the Building Inspector may require an adequate indemnity bond.

14.123 Removal, relocation or modification of utility facilities ---

(1) **Generally**: Any permit issued or permission granted for location of encroachment, including public utility lines, pipes, conduits, or other facilities within city streets, sidewalks, or rights-of-way shall be subject to right of the city to require removal, relocation or modification of said facilities as provided herein. Within (30) days written notice from the city, the permitee shall, at its own cost and expense, temporarily or permanently remove, relocate, change, or alter the position of any line, pipe conduit or other utility facility within city rights-of-way whenever the city has determined that such removal, relocation, change, or alteration is reasonably necessary for:

(a) The construction, repair, maintenance or installation of any city or other public improvement in or upon the right-of-way.

(b) The operations of the city or the governmental entity in or upon the rights-of-way.

(2) **Emergency removal or relocation**: The city retains the right and privilege to cut or move any utility facilities located within the city streets, sidewalks or rights-of-way as the city may determine to be necessary and required in response to any, public health or safety emergency.

14.124 **Penalty** --- Any person, firm or corporation who violates any of the provisions of this title shall, in addition to such other relief as the law may afford, be punishable as set forth in Chapter 32 of this Code.

ARTICLE II DRIVEWAYS

Section 14.201 **Permit required** --- No person, firm or corporation shall construct a driveway across any sidewalk in the city without having obtained a permit therefore. Applications for such permits shall be made to the City Engineer and shall be accompanied by the fee required. No permit for the construction of a driveway for commercial use, or the habitual use of any other than the owner or occupant of the premises served shall be issued except upon order of the Council. No permit for the construction of a driveway leading into or from a state or federal highway shall be issued unless the applicant shall have first obtained a permit therefore as necessary from the State of Illinois.

14.202 **Fee** --- The fee for all such permits shall be two dollars.

14.203 **Grade surface** --- No driveway shall be so constructed or graded as to leave a step, sharp depression or other obstruction in the sidewalk. The grade shall be as nearly as possible the same as that of the adjoining sidewalk. It shall be unlawful to have the surface finish of any driveway where the same crosses the sidewalk constructed of such materials as to render it slippery and hazardous for pedestrians, or to have the grade of such portion vary from the grade of the sidewalk or be other than level.

14.204 **Materials** --- Driveways across sidewalks shall be constructed of concrete or of such other materials as may be approved by the Superintendent of Street and Bridge.

14.205 **Curbing** --- The City Engineer shall approve removal of all curbing and guttering for the purpose of constructing driveways or for any other purpose.

The City Engineer may grant authority to remove curbing for a maximum distance of thirty feet along the property line and having a radius at the curb line of five feet on each side of this thirty foot space for ingress and an equal amount for egress provided that there shall be a minimum of a five foot island at a point two and one-half feet from the curb line between the ingress and egress driveways, but that said City Engineer shall not in any event grant authority to remove curbing or guttering for more than two such openings on any one street in any one block to any one property owner.

The City Engineer is further authorized to require any property owner to install curbing and guttering wherever the driveways have become unused or abandoned.

14.206 **Repair** --- It shall be the duty of every person maintaining a driveway to keep the same in good repair where it crosses the sidewalk, and free from obstruction and openings

14.207 **Penalty** --- Any person, firm or corporation who violates any of the provisions of this title shall, in addition to such other relief as the law may afford, be punishable as set forth in Chapter 32 of this Code.

ARTICLE III EXCAVATIONS

Section 14.301 <u>Permit required</u> --- It shall be unlawful for any person, firm or corporation to tunnel under or to make any excavation or opening in any street, alley or other public place in the city without having obtained a permit therefore as is herein required, or without complying with the provisions of this Article or in violation of or variance from the terms of any such permit.

14.302 <u>Applications</u> --- Applications for such permits shall be made to the City Engineer and shall describe the location of the intended opening, excavation or tunnel, the size, the purpose therefore, and the person, firm or corporation doing the actual excavating work and the name of the person, firm or corporation for whom or which the work is being done.

14.303 <u>Opening in pavement - exception</u> --- It shall be unlawful for any person, firm or corporation to make any opening in, break, tear up, excavate, cut or remove the surface of any paved or improved street, avenue, alley or other public place or any portion thereof in the city at any time within the period of five years from the date of completion of the construction of any such improved street, avenue, alley or other public place, or any portion thereof, for the purpose of laying gas, water or steam heat pipes, the building of sewers, sewer connections, or drains or conduits for underground wires, or connections with any of the aforesaid pipes, sewers, drains or conduits provided that, if by reason of any emergency, it shall be necessary to immediately repair any break in any water, gas, steam heat main or underground conduit or any connection therewith in order to avoid loss or injury, then an opening may be made in such street, avenue, alley or public place upon the following conditions:

(a) It shall be unlawful for any person, firm or corporation desiring to tunnel under or to make any excavation or opening in any street, alley or other public place in the city without obtaining a permit from the City Engineer. The Sanitation and Water Departments of the City of Quincy shall be exempt for all opening fees. Due to the large number of openings made by public utilities, mainly CIPS and Illinois Bell and the large workload that this places on the city crews, public utilities are given permission to break out and replace their own openings and those openings made by the public utilities shall be maintained for a period of two years by the utilities. All other persons, firms or corporations shall be required to have the street openings replaced by the city. The fees assessed for these openings shall be as follows: for concrete, brick, asphalt bituminous concrete or similar material, the cost for breaking out and replacing the pavement shall be $3.00 per square foot, or for replacement of pavement only, $2.00 per square foot. For oil and chip streets, crushed stone, or gravel, the fee shall be $2.50 per square foot for breaking out and replacing the pavement or $1.00 per square foot for replacement of pavement only.

(b) In a street that has been opened, the opening shall be back filled with sand and jetted and a top surface of four inches of gravel or crushed stone shall be applied by the party making the opening. A flat charge of two dollars shall be made for openings in parkways between curb and sidewalk. Said application shall state the place minutely at which it is desired to make such opening together with the purpose for which it is desired to make such opening, and the time when it is desired to begin work. The same charges and conditions shall apply where an opening is made in any street, avenue, alley or public place for any purpose at any time after the five year period mentioned above, and no such opening shall be made before said permit is issued except

in emergency, such as breakage or stoppage. All openings made within ten feet of a crosswalk shall be planked or otherwise securely covered while such excavation remains open.

14.304 <u>Permit</u> --- Upon receiving such application said City Engineer shall immediately, or soon as may be consider said application; and if the said City Engineer finds that an emergency exists he shall immediately issue a permit for the opening of such pavement, which said permit shall specify the time at which the work may commence and the place of opening together with directions how such opening maybe made.

14.305 <u>Opening to be resurfaced by city</u> -- Any opening in any of the streets, avenues, alleys or public place made as aforesaid shall be resurfaced by the city.

14.306 <u>Openings where concrete or cement is laid - how cut</u> --- If an opening is made in any paved street, avenue, alley or public place where a concrete, crushed stone, or cement base has been laid, such opening through such concrete, crushed stone or cement base shall be cut six inches larger on the length and width on each side of the opening. The sides shall be approximately vertical and cut evenly from top to bottom of the said opening.

14.307 <u>Bond</u> --- No such permit shall be issued unless and until the applicant therefore has filed a bond in the sum of five thousand dollars conditioned to indemnify the city for any loss, liability or damage that may result or accrue because of size making or existence of such opening, excavation or tunnel.

14.308 <u>Barricades and lights</u> --- Any person, firm or corporation making or maintaining any opening, excavation or tunnel in any street or alley shall keep the same adequately guarded by barricades and lights to protect persons and property from injury.

All such barricades shall have at least two yellow lights on each barricade and there shall be barricades on both sides of any and all excavations or openings in the streets and the person, partnership or corporation who makes such excavation or opening shall be responsible for the proper placing or barricade and lanterns in accordance with this article. "No Parking" signs shall be placed by the person, corporation or partnership who makes such excavations on the curbs at both sides of the streets where the excavation is made for a distance of at least thirty feet on each side of the opening.

14.309 <u>Manner of excavating</u> --- It shall be unlawful to make any such opening excavation or tunnel in any way contrary to or at variance with the terms of the permit therefore. Proper bracing shall be maintained to prevent the collapse of adjoining ground; and in openings or excavations, the excavation or opening shall not have anywhere below the surface, any portion which extends beyond the opening at the surface.

No injury shall be done to any pipes, cables or conduits in the making of such openings, excavations or tunnels and notice shall be given to the city department or officer charged with the care thereof, which are or may be endangered or affected by the making of any such excavation or tunnel before such pipes, cables or conduits shall be disturbed.

No unnecessary damage or injury shall be done to any tree or shrub or the roots thereof.

14.310 <u>Sidewalks</u> --- If any sidewalk is blocked by any such work, a temporary sidewalk shall be constructed or provided which shall be safe for travel and convenient for users.

14.311 <u>Restoring surface</u> --- Any person, firm or corporation making any opening, excavation or tunnel in or under any public street, alley or public place in the city if there is no pavement, they shall restore the surface thereof to its original condition. Refills in unimproved public places shall be properly tamped down and any bracing in such opening, tunnel or excavation shall be left in the ground.

Any opening in a paved or improved portion of a street shall be refilled with sand and jetted and the surface relaid by the city.

14.312 <u>Supervision</u> --- The Superintendent of Street and Bridge shall from time to time inspect all openings, excavations and tunnels being made in or under any public street, alley or other public place in the city to see to the enforcement of the provisions of this article. Notice shall be given to him at least ten hours before the work of refilling any such opening, excavation or tunnel commences.

14.313 <u>Penalty</u> --- Any person, firm or corporation who violates any of the provisions of this title shall, in addition to such other relief as the law may afford, be punishable as set forth in Chapter 32 of this Code.

ARTICLE IV TREES AND SHRUBBERY

Section 14.401 <u>Purpose and intent</u> ---

(1) **Purpose**: It is the purpose of this ordinance to promote and protect the public health, safety and general welfare by providing for the regulation of the planting, maintenance and removal of trees, shrubs and other plants within the City of Quincy, Illinois.

(2) **Intent**: It is the intent of the City Council of the City of Quincy that the terms of this ordinance shall be construed so as to educate and promote:

(a) The planting, maintenance, restoration and survival of desirable trees, shrubs and other plants within the city; and,

(b) The protection of community residence from personal injury and property damage, and the protection of the City of Quincy from property damage, caused or threatened by the improper planting, maintenance or removal of trees, shrubs or other plants located within the community.

14.402 <u>Definitions</u> ---

(1) **Trees, shrubs and bushes**: Trees, shrubs and bushes as used from time to time herein shall mean all trees, shrubs, bushes and all other woody vegetation, except lawn grass and flowers less than 24 inches in height, which are located on city owned property hereinafter defined as lines on either side of all streets, avenues or ways within the city.

(2) **Arboricultural Specifications and Regulations Manual**: "Arboricultural Specifications and Regulation is Manual' as used herein shall mean the written regulations and specifications prepared by the City Tree Board in accordance with Article XII (Tree Board) of Chapter 11 (Boards and Commissions) of this Code, which contain the regulations and standards for planting, maintenance, and removal of trees, shrubs and other plants or city-owned property.

(3) **Forester**: The duly appointed City Forester provided for in Article II of Chapter 10 (Other Officials) of this Code.

(4) **City-owned property**: Includes property within the corporate limits of the City of Quincy, State of Illinois, which:

(a) is owned by the City of Quincy in fee simple absolute; or,

(b) is or has been impliedly or expressly dedicated to the public for present or future use for purposes of vehicular or pedestrian traffic or for purposes of a public easement.

(5) **Property owner**: "Property owner" is used herein shall mean the record owner or contract purchaser of any parcel of land.

14.403 <u>Permitted species</u> --- The Arboricultural Specifications and Regulations Manual as provided for herein shall set forth a list of permitted trees and shrubs consisting of three (3) categories, namely, small trees; medium trees and large trees. No species other than those specified and included on said list may be planted on city-owned property unless otherwise provided in said manual or by this Code.

14.404 <u>Spacing</u> --- The spacing of trees and shrubs will be in accordance with the three species size classes listed in the Arboricultural Specifications and Regulation Manual and no trees may be planted closer together than the following: small trees, 30 feet; medium trees, 40 feet; and all large trees, 50 feet; except in special plantings designed or approved by the City Forester.

14.405 <u>Distance from curb and sidewalk</u> -- The distance trees may be planted from curbs or curb lines and sidewalk will be in accordance with the three species size classes listed in Section 14.403 of this ordinance, and no trees may be planted close to any curb or sidewalk than the following: small trees, 2 feet; medium trees, 3 feet; and large trees, 4 feet.

14.406 <u>Distance from street corners and fireplugs</u> --- No tree shall be planted closer than 35 feet of any street corner, measured from the point of nearest intersecting curbs or curb lines. No tree shall be planted closer than 10 feet of any fireplug.

14.407 <u>Utilities</u> --- No trees other than those species listed as small trees in the Arboricultural Specifications and Regulations Manual of this ordinance may be planted under or within 10 lateral feet of any overhead utility wire, or over or within 5 lateral feet of any underground water line, sewer line, transmission line or other utility.

14.408 <u>Public tree care</u> --- The city shall have the right to plant, prune, maintain and remove trees, plants and shrubs within or located on city-owned property, as may be necessary to insure public safety or, to preserve or enhance the symmetry and beauty of such public grounds.

The City Forester may remove or cause or order to be removed, any tree or part thereof which is in an unsafe condition or which by reason of its nature is injurious to sewers, electric power lines, gas lines, water lines, or other public improvements, or is affected with any injurious fungus, insect or other pest. This section does not prohibit the planting of trees by adjacent property owners on city-owned property providing that the selection and location of said trees is in accordance with this ordinance and a permit issued in accordance herewith.

14.409 <u>Pruning, corner clearance</u> --- Every owner of any tree overhanging any street or right-of-way within the city shall prune or trim the branches so that such branches shall not impede, obstruct or interfere with traffic or travel or obstruct the view of any street intersection traffic control device or sign. Minimally there shall be a clear space of eight feet above the surface of the street or sidewalk. Said owners shall remove all dead diseased or dangerous trees, or broken or decayed limbs which constitute a menace to the safety of the public. The city shall have the right to prune or trim any tree or shrub on private property when it impedes, obstructs or interferes with traffic or travel or obstruct the visibility of any intersection traffic control device or sign.

14.410 <u>Dead or diseased tree removal on private property</u> --- Any dead or diseased tree on private property within the city which constitutes a hazard or danger to life or property, or which harbors insects or disease constituting a potential threat of disease, infestation or damage to other trees is hereby declared to be a public nuisance. The city shall have the right to cause the removal of any dead or diseased trees on private property whom the city, when such trees constitute a hazard to life and property, or harbor insects or disease which constitute a potential threat to other trees within the city in accordance with Article I (Nuisance and Abatement of Nuisances) of Chapter 21 (Health Regulations) of this Code.

14.411 <u>Removal of stumps</u> --- All stumps of trees or shrubs shall be removed below the surface of the ground so that the top of the stump shall not project above the surface of the ground.

14.412 <u>Injury</u> --- Except as otherwise provided, it shall unlawful to injure any tree or shrub on city owned property.

14.413 <u>Gas pipes</u> --- Any person or company maintaining any gas pipe in the city shall keep such pipes free from leaks so that no injury shall be done thereby to any trees or shrubs.

14.414 <u>Interference</u> --- It shall be unlawful, for any person to prevent, delay or interfere with the City Forester, the City Tree Board, or any of its agents, while engaging in and about the planting, cultivating, mulching, pruning, spraying, or removing of any trees on public or private grounds, as authorized in this ordinance.

14.415 <u>Permits</u> ---

(1) **Scope of requirement**: No person except the Forester, an agent of the Forester, or a contractor hired by the Forester may perform any of the following acts without first obtaining from the Forester a permit for which no fee shall be charged, and nothing in this section shall be construed to exempt any person from the requirements of obtaining any additional permits as are required by law:

(a) Plant on city-owned property, or treat, prune, remove or otherwise disturb any tree, shrub, or other plant located on city-owned property, except that this provision shall not be construed to prohibit owners of property adjacent to city-owned property from watering or fertilizing without a permit any tree, shrub or other plant located on such city-owned property;

(b) Trim, top, prune, or remove any tree or portions thereof if such tree or portions thereof reasonably may be expected to fall on city-owned property and thereby to cause damage to person or property;

(c) Place on city-owned property, either above or below ground level, a container for trees, shrubs or other plants;

(d) Damage, top, cut, tap, carve or transplant any tree, shrub or other plant located on city-owned property;

(e) Attach any rope, wire, nail, sign, poster or any other man-made object to any tree, shrub or other plant located on city-owned property;

(f) Dig a tunnel or trench on city-owned property.

(2) **Issuance**: Within seven (7) days of receipt of the application, the Forester shall issue a permit to perform within thirty (30) days of the day of issuance any of the acts specified in parts (a) and (b), immediately above, for which a permit is requested whenever;

(a) Such acts would result in the abatement of a public nuisance; or

(b) Such acts are not inconsistent with the development and implementation of any regulations or standards of the Arboricultural Specifications and Regulations Manual; and whenever;

(c) An application has been signed by the applicant or the applicant's agent or representative and submitted to the Forester detailing the location, number, size and species of trees, shrubs or other plants that will be affected by such acts, setting forth the purpose of such

acts and the methods to use, and presenting any additional information that the Forester may find reasonably necessary.

(d) The applicant agrees to perform the work for which the permit is sought in accordance with the provisions of this ordinance and with the regulations and standard set forth in the Arboricultural Specifications and Regulations Manual; and,

(e) The applicant certifies that he or she has read and understands those provisions of this ordinance and of the Arboricultural Specifications and Regulations Manual which are pertinent to the work for which the permit is sought; and,

(f) If the work for which a permit is issued entails the falling of any tree or part thereof, located on private property, which, as a result of such falling reasonably, may be expected to fall upon City-owned property, and if such falling is done by one other than the owner of the property of which such falling is done, then the applicant shall agree to indemnify and to hold the City of Quincy harmless for all damages resulting from work conducted pursuant to the permit and shall deposit with the City Clerk reliability insurance policy in the amount of $100,000.00 per person/$300,000.00 per accident for bodily injury liability and $50,000.00 aggregate for property damage liability, which policy shall name the City of Quincy as an additional insured.

14.416 <u>Public utility companies</u> --- Nothing in this section shall be construed to exempt public utility companies or their agents from any of the requirements of this ordinance.

14.417 <u>Penalty</u> --- Any person, firm or corporation who violates any of the provisions of this title shall, in addition to such other relief as the law may afford, be punishable as set forth in Chapter 32 of this Code.

ARTICLE V SIGNS, AWNINGS AND SIMILAR DEVICES

Section 14.501 <u>Encroachment prohibited</u> --- No sign, show board, advertisement, banner, display, awning, canopy or other similar device or object with or without any lettering, marks, arrows, symbols, information, directions or advertisements thereon shall be erected, placed, located, or allowed to remain so that it, or any part thereof, extends over or is located upon any part of any sidewalk, street, alley, parkway or other similar publicly owned areas in the City of Quincy, except as otherwise permitted in this Article.

14.502 <u>Exceptions and permits</u> ---

(1) **Generally**: Encroachment by sign, show board, advertisement, banner, display, awning, canopy or other similar device or object as prohibited by Section 14.501 may be allowed is provided in this Section.

(2) **Permits**: Encroachment by a sign, show board, advertisement, banner, display, awning, canopy or other similar device or object as prohibited by Section 14.501 may be allowed by the City Council if a permit therefore is issued in accordance with this Article.

(3) **Effect of exceptions and permits**: The existence of an exception hereunder or the issuance of a permit shall not be deemed to allow the violation of any other provisions of this code or established by law or ordinance regarding the obstruction of streets, sidewalks, alleys, parkways or other right of ways or the erection, placement, location or allowance of any sign, show board, advertisement, banner, display, awning, canopy or other similar device or object, including, but not limited to those established otherwise in this Chapter, pertaining to streets and sidewalks, or by Chapter 29, pertaining to zoning.

14.503 <u>Permit for signs and advertisements</u> ---

(1) **Generally**: Encroachment by a sign, show board, advertisement, banner, display, awning, canopy, or other similar device or object as prohibited by Section 14.501 may be allowed by a permit issued by the Building Inspector after being approved by the City Council. There is no right to a permit or the continuation of a permit. All permits issued shall be revocable at the pleasure of the City Council or as provided herein.

(2) **Types of permits**: Permits issued hereunder may either be continuing permits or temporary permits. All permits shall be considered revocable. A continuing permit shall allow the continued encroachment by a sign, show board, advertisement, banner, display, awning, canopy or other similar device or object until revoked by the City Council or as provided herein. A temporary permit shall allow the encroachment by a sign, show board, advertisement, banner, display, awning, canopy or other similar device or object only for so long as is stated in such temporary permit and, in no event, more than thirty (30) consecutive days. A temporary permit may be sooner revoked, however, by the City Council or as provided herein.

(3) **Application for permit**: Any person firm or corporation desiring to erect, place, locate or allow to remain, any sign, show board, advertisement, banner, display, awning, canopy or other similar device or object otherwise prohibited pursuant to Section 14.501 shall apply in writing to the City Council. Such application shall be filed with the Building Inspector and be in such form, if any, as the Building Inspector may prescribe. Such application shall include the following information, at a minimum:

(a) The location of the proposed sign, show board, advertisement, banner, display, awning, canopy or other similar device or object;

(b) The purpose for which such sign, show board, advertisement, banner, display, awning, canopy or other similar device or object is to be erected, placed, located or allowed to remain;

(c) The exact lettering, marks, arrows, symbols, information, directions, or advertisements, if any, to be contained thereon;

(d) The size, dimension and proposed placement of such sign, show board, advertisement, banner, display, awning, canopy or other similar device or object;

(e) The lighting, if any, of such sign, show board, advertisement, banner, display, awning, canopy or other similar device or object, including, in addition to any other relevant information, the number and type of globes or lights to be used, the total wattage or candle power thereof and whether the same will be pulsating;

(f) A statement as to whether the sign, show board, advertisement, banner, display, awning, canopy or other similar device or object is to be continuing or temporary; and, if temporary, the dates or time period for which the permit is desired; and,

(g) Any other information which may be material or is requested by the Building Inspector.

(4) **Review of application**: The Building Inspector shall review all applications for permits and forward the same together with the Building Inspector's recommendations to the City Council.

(5) **Issuance of permit**: If approved by the City Council, the Building Inspector shall issue a revocable permit in accordance with the application, but subject to such reservations or qualifications as the City Council may prescribe. In the case of temporary permits, the permit shall specifically provide that it is limited to a time period specified therein and, in no event, more than thirty (30) consecutive days. Further temporary permits may be applied for. Generally, however, temporary permits will not be issued for a particular location more than thirty (30) days in any twelve (12) month period. Further, no continuing permit will be granted for any sign, show board, advertisement, banner, display, awning, canopy or ether similar device or object located upon (as opposed to overhanging) any sidewalk, street, alley, park way or other similar publicly owned areas in the City of Quincy.

(6) **Permit fees**:

(a) **Generally**: Prior to the issuance of a permit hereunder, the applicant shall pay to the City of Quincy, a permit fee as herein provided. Such fee shall be collected by the Building Inspector.

(b) **Continuing permits**: If the device or object contains any lettering, marks, arrows, symbols, information, directions or advertisements, the fee for a continuing permit shall be fifty cents ($0.50) per square foot or fraction thereof of the exposed sides of the sign, show board, advertisement, banner, display, awning, canopy or other similar device or object, provided, however, that such fee shall in no event be less than fifteen dollars ($15.00). In determining square feet, the entire device or object as squared off shall be considered regardless of whether its entire surface contains any lettering, marks, arrows, symbols, information, directions or advertisements. If the device or object does not contain any lettering, marks, arrows, symbols, information, directions, or advertisements, the fee shall be fifteen dollars ($15.00).

(c) **Temporary permits**: The fee for a temporary permit shall be ten dollars ($10.00) for thirty (30) consecutive days, or any part thereof.

(d) **Waiver of fee**: The City Council reserves the right to waive any fees required hereunder if the sign, show board, advertisement, banner, display, awning, canopy or other similar device or object is to be erected, placed or located by or for a charitable or not-for-profit organization or purpose, or otherwise as it shall determine.

(7) **Change in sign**: No change shall be made to the sign, show board, advertisement, banner, display, awning, canopy or other similar device or object permitted so that it is different than that permitted except as permitted by a new permit. The same fee shall apply for the new permit as established hereunder for initial permits. In the case of a continuing permit, a new permit shall not be required, however, because of the transfer of the real estate to which it applies. Temporary permits, on the other hand, shall terminate automatically.

14.504 <u>Installation and maintenance of signs</u> ---

(1) **Generally**: The installation and maintenance of any sign, show board, advertisement, banner, display, awning, canopy or other similar device or object shall be the responsibility of the applicant for any permit issued hereunder, or such applicant's successors and assigns, if any, and the owner or owners of the property to which the same is attached or the permit relates in the case of a continuing permit. All signs, show boards, advertisements, banners, displays, awnings, canopies or other similar devices or objects shall be installed and maintained in a safe manner and condition.

(2) **Location**: All signs, show boards, advertisements, banners, displays, awnings, canopies or other similar devices or objects permitted shall be located in accordance with the permit issued therefore and in a manner so that the same does not obstruct or impede pedestrian or vehicular traffic or otherwise constitute a hazard.

14.505 <u>Supervision</u> --- All signs, show boards, advertisements, banners, displays, awnings, canopies or other similar devices or objects allowed hereunder shall be under the supervision of the Chief of the Fire Department and the Building Inspector. The Chief of the Fire Department is specifically directed to inspect or cause an inspection to be made at regular intervals of every such device or object. In the event any such device or object is found insecure or to otherwise constitute a hazard to the public health, safety and welfare, the Chief of the Fire Department or the Building Inspector may direct that remedial actions be taken by the party or parties responsible for such device or object, which may include, among other remedial actions, the repair or removal of the device or object. If the hazard determined by the Chief of the Fire Department or Building Inspector is not remedied within ten (10) days after notice of such defect, the Chief of the Fire Department or Building Inspector may take immediate action to do the same. Notwithstanding anything herein to the contrary, the Chief of the Fire Department and the Building Inspector may take emergency actions at any time, with or without notice, as they shall deem appropriate in the interests of the public health, safety and welfare, including, but not limited to, the immediate removal of the device or object.

14.506 <u>Liability</u> --- The applicant for any permit hereunder, the applicant's successors and assigns, and, in the case of continuing permits, the owner or owners of the property to which the same is attached or the permit relates shall be responsible for any damages which may be

incurred as a result of any such device or object. They shall further be deemed by the issuance of the permit to have agreed to hold the City of Quincy harmless as against any such liability. Any inspections, review or approval of the City of Quincy are made solely for its internal purposes only. Neither the City of Quincy nor its agents and employees shall be liable for any damages on account of any such inspection, review or approval or resulting from the device or objects.

14.507 <u>Removal of signs</u> ---

(1) **Generally**: Any sign, show board, advertisement, banner display, awning, canopy or other similar device or object for which encroachment is allowed hereunder shall be removed within ten (10) days, in the case of any continuing permit or if a permit is not required, and within twenty-four (24) hours, in the case of any temporary permit, after notice is given by the City of Quincy revoking a permit or exception as to such device or object. If not timely removed, the City of Quincy may cause such device or object to be removed and disposed of.

(2) **Emergencies**: Notwithstanding anything herein to the contrary, the City of Quincy reserves the right to sooner cause the removal of any such devices or objects in the interests of the public health, safety and welfare and as otherwise provided in this Article.

(3) **Lien**: The cost of any repair, removal of disposal of any sign, show board, advertisement, banner, display, awning, canopy or other similar device or object under the provisions of this Article or otherwise shall be a lien upon the real estate to which such device or object is or was attached or adjacent to which it is or was located. Such lien shall be filed in the office of the Adams County Recorder of Deeds within sixty (60) days after costs are incurred, by a sworn statement setting forth the costs of such repair, removal disposition and the real estate to which the lien applies. Such lien shall be superior to all other liens and encumbrances except taxes. However, the lien of the city shall not be valid as to any purchaser whose rights in and to such real estate have arisen subsequent to the removal and prior to the filing of such notice, and the lien of the city shall not be valid as to any mortgage, judgment creditor or other lien or notice. Upon payment of the cost and expense of recordation by the owner of or the persons interested in such property after notice of lien has been filed, the lien shall be released by the city and the release may be filed of record as in the case of filing notice of lien. The notice may, on behalf of the city, be executed and released by the Superintendent of Street and Bridge, the Chief of the Fire Department, the Building Inspector, the City Treasurer, the City Clerk or any of the attorneys for the city.

14.508 - 14.509 (Reserved)

14.510 <u>Penalty</u> --- Any person, firm or corporation who or which violates any of the provisions of this Article shall, in addition to such other relief as the law may afford, be punishable as set forth in Chapter 32 of this Code.

ARTICLE VI SUBSIDEWALK SPACE

Section 14.601 **Permit required** --- It shall be unlawful to use any vault, space, room or structure under any street or sidewalk in the city without having first secured a permit therefore as is herein required. Such permits shall be issued by the City Clerk and shall be signed by the Mayor and the City Clerk.

14.602 **Applications** --- Applications for a permit to use or maintain a vault, space, room or structure under street or sidewalk in the city shall be made in writing to the City Clerk and shall state thereon specifically the size of the space intended to be maintained or used, and the purpose for which it is to be used. Each application shall contain an agreement by the applicant to abide by all the regulations contained in this Article.

14.603 **Openings** --- All openings through the sidewalk or street into any such vault, space, room or structure shall be kept covered and guarded. If the opening is a manhole or trap door, an adequate, strong metal cover must be provided and must be equipped with a rough surface and be flush with the sidewalk so that there will be no danger of any pedestrian slipping on it. If a stairway is provided, the stairway must be properly guarded with a railing at least three feet high to protect pedestrians from injury.

No trap door, manhole or other opening in any street, sidewalk, parkway, alley or other public place shall be permitted to be or remain open unless it is guarded while open by sufficient barricades to prevent injury to persons or property.

The Council may authorize the Superintendent of Street and Bridge to close up any such vault, space, room, opening or structure.

14.604 **Fee** --- The fee to be paid for such permits shall be twenty five dollars for each sidewalk opening.

14.605 **Use** --- No such vault, space, room or structure shall be used for the storage of explosives or flammable fluids, nor shall a cesspool be located therein.

14.606 **Construction** --- Such vaults, room, spaces or structures shall be firmly constructed so as to support the sidewalk or street over it or them with the maximum load which the sidewalk or street will carry with a margin of safety of fifty percent over this maximum load or weight.

The Superintendent of Street and Bridge shall inspect all such rooms, spaces, vaults or structures to see to the enforcement of the provisions of this Section.

14.607 **Sidewalks** --- The surface of the sidewalk over any such structure must be kept clear of snow and ice, and free from all dirt and obstruction of any kind by the person holding the permit. Any such person must keep the sidewalk over such structure in good repair and free from all defects of any kind.

14.608 **Revocation of permits** --- Any permit issued under the provisions of this Article may be revoked by order of the Council for a violation of any of the provisions of this Article.

14.609 **<u>Penalty</u>** --- Any person, firm or corporation who violates any of the provisions of this title shall, in addition to such other relief as the law may afford, be punishable as set forth in Chapter 32 of this Code.

ARTICLE VII SNOW REMOVAL

Section 14.701 **<u>Snow on the streets</u>** --- It shall be unlawful for any person, firm or corporation to park or allow to remain, a motor vehicle or any other vehicle, on any of the following described streets in the City of Quincy, Illinois for a period of twenty-four hours or until the snow emergency is declared ended by the Mayor or the Director of Public Works whenever there is an accumulation of three or more inches of snow.

STREETS

Seminary Road	12th to 18th
Locust Street	3rd to 24th
Chestnut Street	3rd to 30th
Oak Street	3rd to 30th
Vermont Street	3rd to 24th
Hampshire Street	3rd to 24th
Maine Street	3rd to 48th
Jersey Street	3rd to 14th
York Street	3rd to 12th
State Street	3rd to East City Limits
Jefferson Street	Front to 24th
Jackson Street	3rd to 24th
Harrison Street	6th to 8th
Harrison Street	12th to East City Limits
Gardner Expressway	South City Limits to York
Bluff Road	5th to 12th
Spruce Street	3rd to 24th
Cedar Street	24th to 28th
Lyric Lane	
Rhapsody Road	Lyric Lane to Harmony Hill
Harmony Hill	
Melodie Lane	Melodie North to 36th
Melodie North	
College Avenue	30th to 36th
Lindell Avenue	30th to 36th
Columbus Road	36th to Pawn Avenue
Broadway	Bayview Drive to 3rd
Holiday Drive	36th to Maine
Monroe Street	24th to 28th
Cherry Lane	Wilmar Drive to 24th
Klondike Road	8th to St. Charles Drive
St. Charles Drive	Klondike Road to 12th
West Granview	Harrison to S. Granview
South Granview	W.Granview to Granview Dr
Granview Drive	S. Granview to Harrison

Curtis Creek Road	Harrison to Midlan Drive
Midlan Drive	Curtis Creek to 28th
Woodside Drive	28th to 30th
Wilmar Drive	Harrison to Cherry Lane
East Avenue	Maine to York
Bayview Drive	Broadway to Bluff Road
Elm Street	12th to 30th
Front Street	Jefferson to Broadway
3rd Street	Locust to York
4th Street	Jefferson to Locust
5th Street	Jersey to Broadway
5th Street	Jefferson to Washington
6th Street	Harrison to Broadway
7th Street	Jersey to Broadway
8th Street	South Park to Locust
10th Street	Broadway to Locust
12th Street	South City Limits to Locust
16th Street	Seminary Road to Harrison
18th Street	Harrison to Seminary Road
20th Street	Jefferson to Jackson
22nd Street	Locust to Broadway
22nd Street	York to Harrison
24th Street	Locust to Cherry Lane
27th Street	Broadway to Maine
28th Street	Broadway to Cedar
28th Street	Monroe to Harrison
28th Street	Midlan Drive to Woodside Drive
30th Street	Chestnut to State
30th Street	Woodside Drive to Harrison
36th Street	State to North City Limits
South Park Road	12th to Front Street
11th Street	Broadway to Oak

14.702 **<u>Operation of ordinance</u>** --- This ordinance shall be called into operation by the Mayor with the advice of the Director of Public Works and the Superintendent of Streets. However, in the Mayor's absence, the Public Works Director with the advice of the Superintendent of Streets and the Chief of Police shall call the ordinance into effect. If the Mayor and Public Works director are absent, then the Superintendent of Streets with the advice of the Chief of Police, shall call the ordinance in effect and if all three are absent, then the Chief of Police shall call the ordinance into effect. The Mayor shall announce to all local news media that said ordinance is in effect and he shall also notify the police department. Said announcement shall be made between the hours of 6:00 o'clock a.m. and 8:00 o'clock p.m., and all persons shall be given two hours within which to comply with this ordinance. However, if such announcement shall be made between the hours of 6:00 o'clock a.m. and 9:00 o'clock a.m., all persons shall be given three hours within which to comply with this ordinance.

14.703 <u>Impoundment of vehicles</u> --- An unattended vehicle stopped, standing or parked, or occupying any portion of any street in violation of this ordinance is hereby declared to be a nuisance, which may be abated by any police officer by impounding such vehicle to be removed and conveying such vehicle or by causing such vehicle to be removed and conveyed to a vehicle pound. A vehicle pound is hereby declared to be any suitable place designated by the Police Department of the city as a vehicle pound. The owner or operator of such vehicle may have the same removed from the impoundment by paying the costs and expenses of the towage and impounding of such vehicle, together with all fines and penalties.

In all cases of violations herein referred to, the right to impound shall be in addition to any other remedy provided by law, and the registered owner of the vehicle at the time of the violation shall be presumed to be the violator, as well as the vehicle itself, and the actual operator thereof. Whenever any vehicle while being used without the consent of the owner shall be stopped, standing or parking in violation of any of the provisions of this ordinance, such owner shall not be subject to the penalty for such violations.

14.704 <u>Penalty</u> --- Any person, firm or corporation who violates any of the provisions of this title shall, in addition to such other relief as the law may afford, be punishable as set forth in Chapter 32 of this Code.

ARTICLE VIII STREET CLEANING

Section 14.801 **Generally** --- The cleaning of all public streets, alleys and other public ways shall be under the general supervision of the Superintendent of Street and Bridge.

14.802 **Designation of streets for cleaning** --- In order to provide for the cleaning of public streets, alleys and other public ways in the City of Quincy, the Superintendent of Street and Bridge shall from time to time designate streets, alleys and other public ways to be cleaned. Streets, alleys and public ways to be cleaned shall be designated by posting on or along the same notices that parking is temporarily prohibited for street cleaning purposes and the specific hours parking is so prohibited. Such notice shall be posted at least twenty-four (24) hours prior to the specific hours parking is so prohibited. After the posted street, alley or public way is cleaned, the notices shall be removed. Parking shall thereafter be permitted. In the absence of the Superintendent of Street and Bridge, streets, alleys and other public ways may be so designated for street cleaning purposes by the Director of Public Works, the City Engineer or some person selected for such purposes by the Superintendent of Street and Bridge.

14.803 **Parking prohibited** --- It shall be unlawful for a person, firm or corporation to park or allow to remain a motor vehicle, any other vehicle or obstruction on any street, alley or public way designated for cleaning in accordance with Section 14.802 of this Article.

14.804 **Penalty** --- Any person, firm or corporation who violates any of the provisions of this title shall, in addition to such other relief as the law may afford, be punishable as set forth in Chapter 32 of this Code.

CHAPTER 15

LICENSES AND PERMITS

Section 15.001 **Applications** --- Applications for all licenses and permits required by ordinance shall be made in writing to the City Clerk in the absence of provision to the contrary. Each application shall state the name of the applicant, the permit or license desired, the location to be used, if any, the time covered and the fee to be paid; and each application shall contain such additional information as may be needed for the proper guidance of the city officials in the issuing of the permit or license applied for.

15.002 **Person subject to license** --- Whenever in this code a license is required for the maintenance, operation or conduct of any business or establishment, or for doing business or engaging in any activity or occupation any person or corporation shall be subject to the requirement if by himself or through an agent, employee or partner he holds himself forth as being engaged in the business or occupation; or solicits patronage therefore, actively or passively; or performs or attempts to perform any part of such business or occupation in the city.

15.003 **Forms** --- Forms for all licenses, permits and applications therefore, shall be prepared and kept on file by the City Clerk.

15.004 **Signatures** --- Each license or permit issued shall bear the signatures of the Mayor and the City Clerk in the absence of any provision to the contrary.

15.005 **Investigations** --- Upon the receipt of an application for a license or permit where ordinances of the city necessitate an inspection or investigation before the issuance of such permit or license, the City Clerk shall promptly after receipt refer such application to the proper officer for making such investigation. The officer charged with the duty of making the investigation or inspection shall make a report thereon, favorable or otherwise, within ten days after receiving the application or a copy thereof. All investigation except where otherwise provided shall be made by the Chief of Police or by some other officer if so designated by the Mayor.

15.006 **Fees** --- In the absence of provision to the contrary all fees and charges for licenses or permits shall be paid in advance at the time application therefore is made. When an applicant has not engaged in the business until after the expiration of part of the current license year, the license fee shall, for the unexpired portion of the license period, be at the rate of ten percent per month; provided, however, that liquor licenses shall be pro-rated at 8-1/3% per month. Except as otherwise provided, all license fees shall become a part of the corporate fund.

15.007 **Termination of licenses** --- All annua1 licenses shall terminate on the last day of the fiscal year of the city where no provision to the contrary is made.

The City Clerk shall mail to all licensees of the city a statement of the time of expiration of the license held by the licensee, if an annual, three weeks prior to the date of such expiration. Provided, that a failure to send out such notice, or the failure of the licensee to receive it shall not excuse the licensee from a failure to obtain a new license, or a renewal thereof, nor shall it be a defense in an action for operation without a license.

15.008 Building and premises --- No license shall be issued for the conduct of any business and no permit shall be issued for anything, or act, if the premises and building to be used for the purpose do not fully comply with the requirements of the city. No such license or permit shall be issued for the conduct of any business or performance of any act which would involve a violation of the zoning ordinance of the city, but if such license or permit should inadvertently be issued, it shall be void.

15.009 Change of location --- The location of any licensed business or occupation, or of any permitted act, may be changed, provided, ten days notice thereof is given to the City Clerk in the absence of any provision to the contrary; provided that the building and zoning requirements of the ordinances are complied with.

15.010 Nuisances --- No business, licensed or not, shall be so conducted or operated as to amount to a nuisance in fact. This provision shall not limit nuisance abatement pursuant to Chapter 21, Article I of this Code.

15.011 Inspections --- Whenever inspections of the premises used for or in connection with the operation of a licensed business or occupation are provided for or required by ordinance or are reasonably necessary to secure compliance with any ordinance provision or to detect violations thereof, it shall be the duty of the licensee, or the person in charge of the premises to be inspected, to admit thereto for the purpose of making the inspection any officer or employee of the city who is authorized or directed to make such inspection at any reasonable time that admission is requested.

Whenever an analysis of any commodity or material is reasonably necessary to secure conformance with any ordinance provision or to detect violations thereof, it shall be the duty of the licensee of the municipality whose business is governed by such provision to give to any authorized officer or employee of the city requesting the same, sufficient samples of such material or commodity for such analysis upon receipt.

In addition to any other penalty which may be provided, the Mayor may revoke the license of any licensed proprietor of any licensed business in the city who refuses to permit any such officer or employee who is authorized to make such inspection or take sample to make the inspection, or take an adequate sample of the said commodity, or who interferes with such officer or employee while in the performance of his duty in making such inspection. Provided that no license shall be revoked for such cause unless written demand is made upon the licensee or person in charge of the premises, in the name of the city, stating that such inspection or sample is desired at the time it is sought to make the inspection or obtain the sample.

15.012 Revocation --- Any license or permit for a limited time may be revoked by the Mayor or the issuing officer at any time during the life of such license or permit for any violation by the licensee or permittee of the ordinance provisions relating to the license or permit, the subject matter of the license or permit, or to the premises occupied; such revocation may be in addition to any fine imposed.

15.013 **Posting license** --- It shall be the duty of any person conducting a licensed business in the city to keep his license posted in a prominent place on the premises used for such business at all times.

15.014 **Vehicle tag** --- Whenever the number of vehicles used is the basis of a license fee, the City Clerk shall furnish each licensee with a tag or sticker for each vehicle covered by the license, and such tag or sticker shall be posted in a conspicuous place on the front or rear of each such vehicle while it is in use.

15.015 **Penalty** --- Any person, firm or corporation who violates any of the provisions of this title shall, in addition to such other relief as the law may afford, be punishable as set forth in Chapter 32 of this Code.

CHAPTER 16

AMUSEMENTS

ARTICLE I	**GENERAL PROVISIONS**
ARTICLE II	**BILLIARDS AND POOL HALLS**
ARTICLE III	**BOWLING ALLEYS**
ARTICLE IV	**CIRCUSES**
ARTICLE V	**MOTION PICTURES & THEATRICALS**
ARTICLE VI	**PUBLIC GATHERINGS**
ARTICLE VII	**SHOOTING GALLERIES**
ARTICEL VIII	**SKATING RINKS**
ARTICEL IX	**COIN OPERATED MECHANICAL AMUSEMENT & MUSIC DEVICES**

ARTICLE I GENERAL PROVISIONS

Section 16.101 **Application of provisions** --- The provisions of this Article, except as to licensing and fees, shall apply to all public shows, theatricals, circuses and other amusement in the city whether specifically licensed in another Article of this Chapter or not.

16.102 **Licenses** --- It shall be unlawful to conduct or operate any amusement which is open to the public and for admission to which a fee is charged without having first obtained a license therefore, provided, that the provisions of this Section shall not be held to apply to those amusements which are specifically licensed by any other ordinance of the city.

Applications for such licenses shall be made to the Clerk and shall comply with the general provisions of the ordinances relating to such applications. For such licenses the following fees shall be paid:

Circus, menageries, wild west shows
- $200.00 for one day
- $100.00 for each additional day
  - (when the price of admission is over 25 cents)
- $100.00 for one day > When the price of admission is
- $ 50.00 for each additional day > 25 cents or under.

Carnivals
- $300.00 per week

Exhibitions of inanimate objects
- $10.00 per day

Penny arcades and museums
- $200.00 per year
- $100.00 for six months
- $ 50.00 for one month
- $ 25.00 for one week

Street parades of circuses, menageries and wild west shows:
- $75.00 per day (when the price of admission is over 25 cents)
- $50.00 per day > When the price of admission is
- $65.00 for two days > 25 cents or less

All concerts, plays, art shows, antique shows and like activities sponsored by local not for profit organizations shall be exempt from the licensing provisions herein.

All activities sought to be licensed herein which are sponsored by local not for profit organizations shall be required to pay license fees, in lieu of the regular fees set out herein as follows:

Carnivals	$100.00 per week
Circuses	$ 50.00 per day

All others $ 50.00 for any period up to two weeks

Merry-go-rounds or other similar amusement device, operating as an independent unit, for each device:

$15.00 per day
$50.00 per week

Amusement parks, including the privilege and permission of operating and conducting therein shooting galleries, merry-go-rounds, dance floors, moving picture shows, skating rinks and vaudeville shows:

$100.00 for one year
$ 50.00 for six months
$ 30.00 for three months

Provided that nothing herein contained shall be construed as requiring a license for baseball games and baseball grounds or parks devoted exclusively to baseball purposes; and provided further that nothing herein contained shall be construed as allowing or permitting walkathons, dance marathons, or other exhibitions and contests of similar character or any mental or physical endurance contest under an amusement park license.

Other amusements not specifically licensed

$10.00 per day

Provided further that no carnival or street fair shall be located or held in or upon any street, alley or public place in the city, but, if held at all, shall be held and located on. private property, except by special permission of the City Council. No license for a carnival shall be general as to location, but each license shall specifically fix and designate the place where such carnival shall locate and where each street fair shall be held, and before any such license shall be issued the proposed location shall be approved by the City Council.

16.103 <u>Athletic exhibitions</u> --- It shall be unlawful to conduct, operate or exhibit any race between persons, animals or vehicles, or any baseball games, or any other athletic contest or exhibition for admission to which a fee is charged except scheduled school activities without having procured a license therefore.

The proprietor of such exhibitions shall submit to the City Clerk a statement, verified under oath, of the gross receipts for each such game, contest or race, within one week after such exhibition. At the same time such proprietor or person exhibiting or operating such exhibition shall pay to the Clerk a sum equal to three per cent of the gross receipts.

Sufficient members of the Police Department shall be admitted free of charge to all such exhibitions for the purpose of preserving and maintaining order; and the City Clerk may post a person or any number of persons at the box office of each such performance and may examine all the books pertaining to such performance showing or tending to show the gross receipts.

16.104 <u>Medicine shows</u> --- It shall be unlawful to give or conduct any medicine show or performance in connection with or for the purpose of attracting prospective buyers of, or crowds

for the purpose of lectures on, or demonstrations of, any tonic, medicine, remedy of alleged specific for human ailments without having first secured a permit therefore. Applications for such permits shall state the name, nature and contents of the article to be promoted or offered for sale; such applications shall be referred to the Chief of Police and no permit shall be issued where such tonic, medicine or remedy is harmful for use without the advice of a physician, or consists in whole or part of harmful or habit forming drugs or narcotics.

The fee for such permits shall be $25.00 per day.

16.105 Order - crowding --- The audience of any amusement show or theatrical must be orderly and quiet at all times, and it shall be unlawful for any person attending such amusement, show or theatrical to create a disturbance in the audience.

It shall be unlawful to permit or gather such a crowd to witness any such amusement or show as to create a dangerous condition because of fire or other risks.

16.106 Inspections --- It shall be the duty of the Chief of Police and the Fire Chief to see that every exhibition, amusement, show, theatrical or other public show or amusement is inspected by a member of the Police and of the Fire Department and to insure conformity with the provisions concerning such amusements.

16.107 Riots --- It shall be unlawful to present any public amusement or show of any kind which tends to or is calculated to cause or promote any riot or disturbance.

16.108 Smoking --- It shall be unlawful to smoke or carry a lighted cigar, cigarette or pipe on or beneath any stage or in a dressing room of any building used as an assembly hall with seating accommodations for more than one hundred persons or in which theatricals, shows, amusements, lectures or other entertainment are offered, operated, presented or exhibited.

16.109 Signs --- It shall be the duty of the owner of such premises or of the occupant in charge, to provide and place printed signs on which the words "NO SMOKING" shall appear in letters at least four inches high, in conspicuous places, at least two such signs to be placed upon the stage or in the wings thereof and one in each dressing room.

16.110 Exit lights --- It shall be the duty, of the owner or occupant in charge of any building or hall used as an assembly hall with accommodations for one hundred persons or more, in which theatricals, shows, amusements, lectures and other entertainment are offered, operated, or presented, to provide and place a sign, on which the word "EXIT" shall appear in letters at least six inches high over every door or other opening from such hall to every means of egress therefrom, and a light shall be provided with a red globe and placed at or over such sign, which light shall be kept burning during the entire period that the hall is open to the public and until the audience has left the hall.

16.111 Penalty --- Any person, firm or corporation who violates any of the provisions of this title shall, in addition to such other relief as the law may afford, be punishable as set forth in Chapter 32 of this Code.

ARTICLE II BILLIARD AND POOL HALLS

Section 16.201 **License required** --- No person, firm or corporation shall operate, maintain or conduct a billiard, pool, bagatelle or pigeon hole table open to the public without having first obtained a license therefore as is herein provided. All applications for such a license shall state thereon the intended location of the place of business and number of tables to be used therein.

16.202 **Fee** --- The annual fee for any such license where the game is not coin actuated shall be ten dollars for each table.

16.203 **Hours of operations** --- No billiard hall or other hall licensed hereunder shall be open for business or used between the hours of one o'clock in the morning and six o'clock in the morning.

16.204 **Penalty** --- Any person, firm or corporation who violates any of the provisions of this title shall, in addition to such other relief as the law may afford, be punishable as set forth in Chapter 32 of this Code.

ARTICLE III BOWLING ALLEYS

Section 16.301 **<u>License required</u>** **---** No person, firm or corporation shall operate or maintain a bowling alley open to the public without having first obtained a license therefore. Applications for such licenses shall be made in writing to the City Clerk and shall state thereon the intended location of the place a business and the number of alleys to be used.

16.302 **<u>Fees</u>** **----** The annual fee for such licenses shall be ten dollars for each alley.

16.303 **<u>Penalty</u>** **---** Any person, firm or corporation who violates any of the provisions of this title shall, in addition to such other relief as the law may afford, be punishable as set forth in Chapter 32 of this Code.

ARTICLE IV CIRCUSES

Section 16.401 **License required** --- No person, firm or corporation shall conduct or operate a circus in the city without having first obtained a license as is provided in this Article.

16.402 **Application** --- The applications for such licenses shall be made to the City Clerk and shall specify the place in or on which the circus is to be conducted.

16.403 **Fee** -- The fee for circus licenses shall be as follows:

Where the price of admission is over $0.25, one day $200.00 and $100.00 each additional day; and where the price of admission is $0.25 or under, one day $100.00 with $50.00 for each additional day.

Street parades of circuses, one day $75.00, excepting when the price of admission is $0.25 or under then the fee shall be $50.00 for one day and $65.00 for two days.

16.404 **Side shows and concessions** --- The license fee for each side show and concession operated in connection with a circus shall be five dollars per day.

16.405 **Provisions to be obeyed** --- It shall be the duty of every person licensed under this Article to obey the provisions of Article I of this Chapter and all other ordinance provisions relating to circuses or the premises occupied.

16.406 **Inspection** --- It shall be the duty of the Chief of Police and the Fire Chief to see that inspections as provided for in Article I of this Chapter shall be made of all circuses, circus performances and of the premises used.

16.407 **Cheating** --- It shall be unlawful for any person, firm or corporation to cheat, short change, or otherwise defraud any person attending or about to attend a circus performance within the city.

16.408 **Bond** --- It shall be unlawful to conduct any parade connected with a circus in or on any public street, alley or other public way or place in the city unless therefore is first obtained from the Chief of Police. Such permit shall specify the route to be followed, and shall be accompanied by a bond in the sum of fifty thousand dollars, conditioned to indemnify the city for any loss, damage, or liability incurred or caused by the conduct of such exhibition or such parade.

16.409 **Penalty** --- Any person, firm or corporation who violates any of the provisions of this title shall, in addition to such other relief as the law may afford, be punishable as set forth in Chapter 32 of this Code.

ARTICLE V MOTION PICTURES AND THEATRICALS

Section 16.501 **License required** --- It shall be unlawful to give, present or conduct any motion picture or theatricals for admission to which a fee is charged, excepting performances given solely for the benefit of and under the supervision of a religious, educational or charitable organization, without having first secured a license therefore as is herein provided.

16.502 **Applications** --- Applications for such licenses shall be made in conformance with the general provisions relating to such applications, and shall state in addition to the other information required the place of the intended performance and the seating capacity thereof.

16.503 **Fees** --- Any person securing a license for motion pictures or theatricals, may present any number of performances, including theatricals, during the year for which the license is secured without having to pay any additional fee provided all, such performances are presented in a single specified place or building set forth in the license. All licenses shall be issued for one (1) year being the 1st of May and ending the following 30th day of April, or for a lesser period ending the 30th day of April after issuance.

The license fee for such licenses shall be $175.00 for each theater per year, except that if there is more than one (1) theater under the same ownership and occupying the same building or location, then the license fee shall be $175.00 plus $75.00 for each additional theater. If in the event a license issued is for a period of less than six (6) months, the fee therefore shall be reduced by half.

16.504 **Motion pictures and theatricals on unlicensed premises** -- For motion pictures or theatricals, which are to be presented in premises which are not covered by such license fees, the fee to be paid shall be $10.00 per day; provided that no such motion picture or theatrical shall be presented in or on any premises or building which does not fully comply with the requirements of the ordinances for the construction or maintenance of buildings for this purpose.

16.505 **Prohibited pictures** --- It shall be unlawful to permit any person to offer or present any motion picture which has a tendency to cause a riot or public disturbance of the peace.

16.506 **Crowding - order** --- It shall be unlawful to permit any person, excepting ushers or other theater employees, to remain standing in a hall or room in which a motion picture is presented during the time of such performance; and it shall be unlawful to admit to any such hall more persons than can be accommodated by the seating arrangements for the premises.

16.507 **Scenery** --- It shall be unlawful to use any scenery in any theater other than non-flammable scenery or such as shall have been rendered non-flammable by the application of fire prevention coatings.

16.508 **Building requirements** --- It shall be unlawful to present public motion picture or theatrical in any building or structure which does not contain the number of exits required by the ordinances of the city or by statutes concerning buildings or places intended for such performances, or in premises in which the electric wiring does not fully comply with the

ordinances. All places used for the exhibition of motion pictures or theatricals must be kept adequately ventilated during the performance for so long a time as the audience remains therein.

16.509 **Exits** --- It shall be unlawful to obstruct or permit the obstruction of any aisles, corridors or exits leading from any room or enclosures in which a motion picture performance or theatrical is being given or in which an audience for such a performance is gathered.

16.510 **Penalty** --- Any person, firm or corporation who violates any of the provisions of this title shall, in addition to such other relief as the law may afford, be punishable as set forth in Chapter 32 of this Code.

ARTICLE VI PUBLIC GATHERINGS

Section 16.601 **License required** --- It shall be unlawful to operate or conduct any public gathering, including without limitation, public dances or live entertainment and public gatherings where gas or flammable liquids are used to prepare foods for the public and automobile shows or other shows where flammable gases or liquids are used, without having first obtained a license as herein provided. For such purposes, the term "public dance or live entertainment" shall include without limitation concerts, dances to pre-recorded music, dramatic plays, comedic performances, art and antique shows, merchandise exhibitions, outdoor picnics, barbeques, sporting events and similar activities which are open to the general public and where attendance is expected to exceed fifty (50) persons, whether admission is free, by invitation or ticket and which are not part of a regularly scheduled series of events or seasonal events sponsored by a licensed business or governmental, educational, religious or other not-for-profit organization. All licenses issued hereunder shall be specific as to the person, firm or corporation to whom or which such license is issued, the public gathering for which such license is issued, the place where such gathering is to take place, the time limitation of such license and shall indicate that the location of the event has been inspected and approved by the Quincy Fire Department for compliance with Section 21.201 (Adoption of the 2000 International Fire Code) of this code and the NFPA Life Safety Code.

16.602 **Exemptions** --- The licensing requirements hereby established shall not apply:

(1) To any premises licensed as a cabaret or night club under Chapter 18 of this Code;

(2) When the person, firm or corporation and activity at the particular premises involved have been otherwise licensed under other provisions of this Chapter 16;

(3) When the person, firm or corporation and the activity at the particular premises involved have been otherwise licensed under the provisions of Article I of Chapter 19 of this Code; and,

(4) To karaoeke music (as defined below) provided the same is performed by amateur performers or patrons of an establishment or business. This exemption, shall not apply, however, for such music, if performed by an individual for compensation or payment, whether direct or indirect. As used herein "karaoeke music" means and includes singing or vocal music performed "live" or in person (as distinguished from recorded) by use of a microphone and amplified sound system which is accompanied by recorded instrumental or other music.

16.603 **License applications and issuance** ---

(1) **Application**: Applications for public dance or live entertainment licenses shall be made to the City Clerk on forms prescribed by the City Clerk. The application shall specify, at a minimum, the specific person, firm or corporation to whom or which the license is to be issued, the specific public dance or live entertainment to be licensed, the specific place where such dance or live entertainment is to take place, and the specific term of license being sought.

(2) **Minimum requirement**: No license shall be issued to a person who is not of good moral character and fitness, nor to a firm or corporation which is not represented in the city by an individual of good moral character and fitness. Additionally, no license shall be issued if the public dance or live entertainment contemplated could reasonably cause a menace to the public safety, health, morals or welfare and after consideration of the report of the Chief of Police.

(3) **Investigation**: It shall be the duty of the Chief of Police to make or cause to be made an investigation into the character of each applicant and whether the issuance of the license is likely to present a menace to public safety, health, morals or welfare. Such report shall also obtain the results of a canvass of residents within three hundred feet (300') of the establishment requesting the license. Such report shall be provided to the City Clerk.

(4) **Issuance**: Upon meeting the minimum requirements hereby established and payment of the fees hereinafter fixed, the City Clerk shall issue a public dance or live entertainment license. The City Clerk may, but shall not be required to issue any license until the City Clerk and the Chief of Police have been provided a reasonable opportunity to conduct such investigation, which opportunity shall, in any event, be at least fourteen (14) days.

(5) **Fees**: The fees for public dance and live entertainment licenses are as follows:

Annual license.....$200.00
One month license.....$120.00
One week or less license .....$ 75.00

(6) **Exemption**: The fees set forth in subsection (5) shall be waived for not-for-profit corporations or charitable entities organized under Section 501 of the Internal Revenue Code and with their principal locations within the City of Quincy.

16.604 **Premises** --- It shall be unlawful to conduct a public gathering, as defined in this article, unless the condition of the premises where such gathering is to take place has been inspected by the Quincy Fire Department for compliance with the requirements of section 21.201 (adoption of the 2000 International Fire Code), article V (public buildings) of chapter 30 (miscellaneous regulations) of this code and the NFPA Life Safety Code. No designated area for a public gathering shall be less than 144 square feet. A license issued hereunder by the City Clerk shall be verified by the Fire Chief or his designee as to compliance with this section. No liability shall be imposed upon the City of Quincy, City Clerk, Fire Chief or any official, agent or representative of the City of Quincy for failure to require verification of compliance with the foregoing safety regulations or a failure to properly inspect or investigate such premises.

16.605 **Conduct** --- It shall be unlawful to indulge in or to permit any conduct at any public dance or live entertainment licensed which is a menace to the public safety, health, morals or welfare.

16.606 **Suspension or revocation of license** --- The Mayor is authorized and empowered to suspend or revoke any license issued under this Article. A license may be suspended or revoked:

(1) If the particular public dance or live entertainment at the particular location involved is found to be a menace to the public safety, health, morals or welfare;

(2) If there has been any violation by the licenses of the provisions of this Article or any other applicable provisions of state or local law relative to such public dance or live entertainment;

(3) If the license had been erroneously or illegally issued;

(4) If there had been any false statement or statements made on the application for such license; or,

(5) For other good cause. The suspension or revocation of any license shall be in addition to any fine imposed under the provisions of this Code.

16.607 - 16.609 (Reserved)

16.610 <u>Penalty</u> --- Any person, firm or corporation who or which violates any of the provisions of this title shall, in addition to such other relief as the law may afford, be punishable as set forth in Chapter 32 of this Code.

ARTICLE VII SHOOTING GALLERIES

Section 16.701 **License required** --- It shall be unlawful for any person, firm or corporation to operate or conduct any shooting gallery in the city without having first obtained a license therefore.

16.702 **Fees** --- The fees for such galleries shall be as follows:

Annual fee.....$150.00
For one month.....$ 75.00
For one week.....$ 25.00

16.703 **Conduct** --- All persons present in any shooting gallery shall conduct themselves in an orderly manner and shall not make or cause any loud or unnecessary noise. It shall be unlawful to gamble or bet in any such place.

16.704 **Sanitary regulations** --- Premises used for shooting galleries shall be kept in a clean and sanitary condition.

16.705 **Safety** --- Targets shall be placed before a backstop of steel, sufficiently thick to prevent any bullet from piercing it and so arranged that there will be no danger from ricocheting bullets or deflected pieces of bullet.

16.706 **Penalty** --- Any person, firm or corporation who violates any of the provisions of this title shall, in addition to such other relief as the law may afford, be punishable as set forth in Chapter 32 of this Code.

ARTICLE VIII SKATING RINKS

Section 16.801 **License required** --- It shall be unlawful to operate or maintain a public skating rink in the city without first having obtained a license therefore as is herein provided.

16.802 **Application - investigation** --- Applications for such licenses shall be made in conformance with the provisions of the ordinances relating to licenses and shall specify the location of the proposed skating rink and the person or organization sponsoring the same.

No such license shall be issued to a person who is not of good moral character, nor to a corporation or organization which is not represented in the city by a person of good moral character.

It shall be the duty of the Chief of Police to make or cause to be made an investigation into the character of each applicant and report the results of such investigation to the Clerk.

16.803 **Fee** --- The fees for such skating rinks shall be $100.00 for one year, $15.00 for one month, $5.00 for one week, for each rink.

16.804 **Premises** --- It shall be unlawful to conduct a public skating rink in any hall or building which is not equipped with sufficient and adequate exits; and no hall or building which is not provided with at least two exits of four feet or more in width shall be used for such purpose.

16.805 **Conduct** --- It shall be unlawful to indulge in any improper conduct or to permit any improper conduct at any public skating rink and it shall be unlawful to permit music at any public skating rink after the hour of eleven o'clock p.m.

16.806 **Penalty** --- Any person, firm or corporation who violates any of the provisions of this title shall, in addition to such other relief as the law may afford, be punishable as set forth in Chapter 32 of this Code.

ARTICLE IX COIN OPERATED MECHANICAL AMUSEMENT AND MUSIC DEVICES

Section 16.901 Definition --- The term "Mechanical Amusement Device" is hereby defined to be each machine which, upon the insertion of a coin, trade-token or slug, operated or may be operated as a game or contest of skill or amusement of any kind or description and which contains no automatic payoff device for the return of money or trade tokens or slugs, or which makes no provision whatever for the return of money to the player. A "Mechanical Amusement Device" is hereby further defined as any machine, apparatus, of contrivance which is used or which may be used as a game of skill and amusement wherein or whereby the player initiates, employs or directs any force generated by the machine. The term "Mechanical Amusement Device" vending recorded music or a period of radio or television entertainment in return for the insertion of deposit therein of a coin, or of trade-token or slugs; provided, however, that this does at include coin operated radios or television sets in private quarter.

16.902 License - fee --- It shall be unlawful for any person, firm or corporation to install, operate or maintain any such mechanical amusement or music device without having first obtained a license therefore. Applications shall be made to the City Clerk.

The fee for such license shall be $15.00 per year per device or any portion of a year. The license period shall be the same as the calendar year.

16.903 Issuance --- No license shall be issued except to a person of good character. Upon approval of the applicant and the payment of the license fee, the City Clerk shall issue a license bearing a notation, City of Quincy, License for the calendar year 20_. and the number of devices. One license shall be issued for each establishment in which such devices are installed, operated or maintained, and it shall be placed in a conspicuous place within such establishment so that it is in plain view for inspection by the Police Department of the City of Quincy. There shall at no time be more of such devices in such establishment than the number indicated on said license.

16.904 Devices to be kept in plain view - gambling devices prohibited --- All such devices shall at all times be kept and placed in plain view of any person or persons who may frequent or be in any place of business where such devices are kept or used.

Nothing in this article shall be construed to authorize, permit or license any gambling device of any nature whatsoever.

16.905 Inspection --- The Police Department of the City of Quincy shall inspect the place or building in which any such device or devices are operated or set up for operation and to inspect, investigate and test such devices.

16.906 Revocation --- In addition to any penalty imposed, the Mayor or Council may revoke such license for any violation of this Article or of any ordinance pertaining to the conduct of such business.

16.907 Penalty --- Any person, firm or corporation who violates any of the provisions of this title shall, in addition to such other relief as the law may afford, be punishable as set forth in

Chapter 32 of this Code.

CHAPTER 17

FINANCE

ARTICLE I	**GENERALLY**
ARTICLE II	**HOTEL OPERATORS TAX**
ARTICLE III	**HOME RULE MUNICIPAL RETAILER'S OCCUPATION TAX**
ARTICLE IV	**HOME RULE CITY OF QUINCY SERVICE OCCUPATION TAX**
ARTICLE V	**CITY OF QUINCY USE TAX**
ARTICLE VI	**LOCALLY IMPOSED AND ADMINISTERED TAX RIGHTS AND RESPONSIBILITIES**

ARTICLE I GENERALLY

The purpose of this Chapter is to set forth as part of this code various finance provisions adopted by the City of Quincy. The inclusion of this Chapter shall not be construed to diminish the power and authority of the City of Quincy regarding finance as otherwise set forth in this Code or otherwise provided by law.

ARTICLE II HOTEL OPERATOR'S TAX

Section 17.201 Title --- This article shall be known as the City of Quincy hotel or motel room rental use or privilege tax and the tax herein imposed shall be in addition to all other occupation, use, privilege, or other taxes imposed by the City of Quincy, by any other political subdivision of the State of Illinois or by the State of Illinois.

17.202 Definitions --- The following words, terms and phrases, when used in this Article shall have the meanings ascribed to them in this section, except where the context clearly indicates a different meaning:

"Hotel" or "motel" means a structure kept, used or maintained as or advertised or held out to the public to be an inn, motel, hotel, apartment-hotel, lodging house, dormitory or place where sleeping, rooming, office, conference or exhibition accommodations are furnished for lease or rent, whether with or without meals.

"Hotel room" or "motel room" means a room l within a structure kept, used or maintained as or advertised or held out to the public to be an inn, motel, hotel, apartment-hotel, lodging house, dormitory or place where sleeping, rooming, office, conference or exhibition accommodations are furnished for lease or rent, with or without meals. One room offered for rental, with or without in adjoining bath, shall be considered as a single hotel or motel room. The number of hotel or motel rooms within a suite shall be computed an the basis of those rooms utilized for the purpose of sleeping.

"Owner" means any person having a sufficient proprietary interest in conducting the operation of a hotel or motel room or receiving the consideration for the rental of such hotel or motel room so as to entitle such person to all or a portion of the net receipts thereof,

"Person" means any natural persons trustee, court-appointed representative, syndicate, association, partnership, firm, club company, corporation, business trust, institution, agent, governmental corporation, municipal corporation, district or other political subdivision, contractor, supplier, vendors, vendee, operator, user or owner, or any officers, agents, employees or other representative acting either for himself or for any other person in any capacity, or any other entity recognized by law as the subject of rights and duties.

17.203 Tax ---

(1) There is hereby levied and imposed upon the use and privilege or renting a hotel or motel room within the city a tax of eight percent (8%) of the rental or leasing charge for each such hotel and motel room rented for each 24-hour period or any portion thereof: provided, however, that the tax shall not be levied and imposed upon any person to rent a hotel or motel room for more than thirty (30) consecutive days or to a person who works and lives in the same hotel or motel.

(2) The ultimate incident of and liability for payment of such tax shall be borne by the person who seeks the privilege of occupying any such hotel or motel room, such person hereinafter referred to as "renter".

(3) The tax herein levied shall be paid in addition to any and all other taxes and charges. It shall be the duty of the owner, manager or operator of every hotel or motel to act as trustee for and on account of the city, and to secure such tax from the renter of the hotel or motel room and

pay over to the City Comptroller such tax under procedures prescribed by the City Comptroller or as otherwise provided in this Article.

(3) Every person required to collect the tax levied by this Article shall secure such tax from the renter at the time he collects the rental payment for the hotel or motel room. Upon the invoice receipt or other statement or memorandum, if the rent is given to the renter at the time or payment, the amount due under the tax provided in this Article shall be stated separately on such documents.

17.204 <u>Rules and regulations</u> --- The City Comptroller may promulgate rules and regulations not inconsistent with the provisions of this Article concerning enforcement and application of this Article. The term "rules and regulations" includes, but is not limited to case-by-case determination of whether or not the tax imposed by this Article applies.

17.205 <u>Licenses/registration required</u> ---

(1) It shall be unlawful for any person to establish, operate or maintain, or permit to be established, operated or maintained upon any property owned or controlled by such person a hotel or motel within the City without having first obtained a license/certificate of registration therefore from the City Treasurer or without complying with all provisions of this Article.

(2) No license/certificate of registration shall be issued or annually renewed for a hotel or motel delinquent in payment of the use and privilege tax or the payment of any fines and/or penalties assessed for the nonpayment or late payment thereof.

(3) The license/certificate of registration shall be valid for one year.

17.206 <u>Books and records</u> --- The City Comptroller, or any person certified as his deputy or representative, may enter the premises of any hotel or motel for inspection and examination of books and records in order to effectuate the proper administration of this Article and to assure the enforcement of the collection of the tax imposed. It shall be unlawful for any person to prevent, hinder, or interfere with the City Comptroller or his duly authorized deputy or representative in the discharge of his duties and the performance of this Article. It shall be the duty of every owner to keep accurate and complete books and records to which the City Comptroller or his deputy or authorized representative shall at all times gave access, which records shall include a daily sheet showing: (1) the number of hotel or motel rooms rented during the 24-hour period, including multiple rentals of the same hotel rooms where such still occur; and (2) the actual hotel or motel tax receipts collected or the date in question.

17.207 <u>Tax return and payment of tax revenue</u> ---

(1) The owner of each hotel or motel room within the city shall file tax returns showing tax receipts received with respect to each hotel and motel room during each monthly period commencing on December 1, 1999, and continuing on the first day of every month thereafter on forms prescribed by the City Comptroller. The return shall be due on or before the last day of the calendar month succeeding the end of the monthly filing period. Such owner shall file an application with the city finance department for a city taxpayer identification number prior to filing the first tax return.

(2) The first taxing period for the purpose of this Article shall commence on December 1, 1999; and the tax return and payment for such period shall be due on or before January 31, 2000.

Thereafter, reporting periods and tax payments shall be in accordance with the provisions of this Article. At the time of filing such tax returns, the owner shall pay to the City Comptroller all taxes due for the period to which the tax return applies.

(3) The tax return shall state the following:

(a) The name of the owner.

(b) The address of the hotel or motel and the address of owner's principal place of business (if that is a different address) from which owner engages in the business of renting, leasing or letting rooms in a hotel in this municipality.

(c) Total amount of rental receipts received by owner during the preceding calendar month from renting, leasing or letting rooms during such preceding calendar months.

(d) Total amount of rental receipts received by him during the preceding calendar month from renting, leasing or letting room to permanent residents during such preceding calendar month.

(e) Total amount of other exclusions from gross rental receipts allowed by this article.

(f) Gross rental receipts which were received by him during the preceding calendar month and upon the basis of which the tax is imposed.

(g) The amount of tax due.

(h) The amount of penalty due, if any.

(i) Such other reasonable information as the City Treasurer may require.

(4) If the owner’s average monthly tax liability to the City of Quincy does not exceed $100.00, the City Treasurer may authorize the owner's returns to be filed on a quarter annual basis, with the return for January, February, and March of a given year being due by April 30 of such year, with the return for April, May, and June for a given year due by July 31 of such year; with the return for July, August, and September of a given year being due by October 31 of such year; and with the return for October, November, and December of a given year being due by January 31, of the following year.

If the owner's average monthly tax liability to the City of Quincy does not exceed $20.00, the City Treasurer may authorized the owner's returns to be filed on an annual basis, with the return for a given year being due by January 31 of the following year.

Such quarter annual and annual returns, as to form and substance, shall be subject to the same requirements as monthly returns.

Notwithstanding any other provisions in this Article concerning the time within which an owner may file the owner's return, in the case of any owner who ceases to engage in a kind of business which makes the operator responsible for filing returns under this Article, such operator shall file a final return under this Article with the City of Quincy not more than one (1) month after discontinuing such business.

Where the same person has more than one (1) business registered with the City of Quincy under separate registrations under this Article, such person shall not file each return that is due as a single return covering all such registered businesses, but shall file separate returns for all such registered businesses.

In the owner's return, the owner shall determine the value of any consideration other than money received by the operator in connection with the renting, leasing or letting of rooms in the course of the owner’s business and the owner shall include such value in the return. Such

determination shall be subject to review and revision by the City Treasurer in the manner hereinafter provided for the correction of returns.

Where the owner is a corporation, the return filed on behalf of such corporation shall be signed by the president, vice-president, secretary or treasurer or by the properly accredited agent of such corporation.

The person filing the return herein provided for shall, at the time of filing such return, pay to the City Treasurer the amount of tax herein imposed. All moneys received by the City of Quincy under the provision of this Article shall be paid into the city treasury.

The City Treasurer may, upon separate written notice to a taxpayer, require the taxpayer to prepare and file with the City Treasurer on a form prescribed by the City Treasurer within not less than sixty (60) days after receipt of the notice of annual information return for the tax year specified in the notice. Such annual return to the City Treasurer shall include a statement of gross receipts as shown by the owner's last state income tax return. If the total receipts of the business as reported in the state income tax return do not agree with the gross receipts reported to the City of Quincy for the same period, the owner shall attach to the owner's annual information return a schedule showing a reconciliation of the two (2) amounts and the reasons for the difference. The owner’s annual information return to the City Treasurer shall also disclose additional reasonable information which the City Treasurer deems would be helpful in determining the accuracy of the monthly, quarterly or annual tax returns by such owner as hereinbefore provided for in this Section.

If the annual information return required by this section is not filed when and as required, the taxpayer shall be liable for a penalty equal to one sixth (1/6) of one percent (1%) of the tax due from such taxpayer under this Article during the period to be covered by the annual return for each month or fraction of a month until such return is filed as required, the penalty to be assessed and collected in the same manner as any other penalty provided for this article.

The chief executive officer, proprietor owner or highest ranking manager shall scan the annual return to certify the accuracy of the information contained therein. Any person who willfully signs the annual return containing false or inaccurate information shall be guilty of a violation of this Article.

The foregoing portion of this Section concerning the filing of an annual information return shall not apply to an operator who is not required to file an income tax return with the U.S. Government.

(5) Any officer or employee of any corporation which is an owner subject to the provisions of this Article who has control, supervision or responsibility of collecting tax proceeds, filing returns and transmitting collected tax proceeds of the tax herein imposed by this Article and who willfully fails to file such returns or to transmit any tax proceeds so collected to the city shall be personally liable for any such amounts collected, including interest and penalties thereon, if after proper proceedings for the collection of such amount, such corporation is unable to pay such amounts to the city; and the personal liability of such officer or employee, as provided in this Article, shall survive dissolution of the corporation. For purposes of this subsection, a person willfully fails to act if he takes any conscious and voluntary action intending not to perform any of his obligations hereunder, including, but not limited to, the utilizing of tax. proceeds collected for the city to pay any other corporate obligations.

17.208 <u>Demand for payment and collection</u> ---

(1) In the event any person required to do so by this Article fails to register with the Treasurer, or fails to file a return when due with the Treasurer, or fails to pay any amount of tax when due, or if the Treasurer determines that any return filed with him is incorrect in that it understates the amount of tax due from the person filing the return then the Treasurer, under any and all such cases shall determine the amount of tax imposed by this Article due from such person; based upon his best judgment and the information available to him and shall make a written demand for payment of such amount to such person. The determination of the amount due by the Treasurer as stated in said demand for payment shall become final within ten (10) days after receipt of the demand by the taxpayer. Prior to the expiration of the 10 day period, the demand may be modified, amended, or rescinded by the Treasurer upon his own authority, provided that any said modification or amendment shall not become final until ten (10) days after the receipt by the taxpayer of a written notice of such modification or amendment.

(2) Whenever any person shall fail to pay any tax as provided in this Article, the Corporation Counsel, or designee of the legal department, shall, upon the request of the City Comptroller, bring or cause to be brought an action to enforce the payment of such tax on behalf of the city in any court of competent jurisdiction.

17.209 <u>Proceeds of tax</u> ---

(1) The amounts collected by the City of Quincy pursuant to this tax shall be expended by the City of Quincy to promote tourism, special events and conventions (including use and promotion of the Oakley-Lindsay Convention Center) and otherwise to attract non-resident and overnight visitors to the municipality. Said tax shall be remitted to the Quincy Metropolitan Exposition Auditorium and Office Building Authority (herein "Authority") upon and subject to the condition that the authority expend not more than one-four (1/4) of said tax receipts for the promotion, of municipal tourism and special events, and the balance thereof (three-fourths (3/4)) for the promotion, maintenance and operation of the Oakley-Lindsay Convention Center.

(2) No funds received pursuant to this Article shall be used to advertise for or otherwise promote new competition in the hotel business.

17.210 <u>Suspension of licenses</u> --- If the Mayor, after hearing held by or for him, shall find that any person has willfully avoided payment of the tax imposed by this Article, or any fines and/or penalties assessed for the nonpayment or late payment of such tax, he may suspend or revoke all city licenses held by such tax evader. The owner manager or operator of the hotel or motel shall have an opportunity to be heard at such hearing to be held not less than five days after notice of the time and place of the hearing to be held, addressed to him at his last known place of business.

17.211 <u>Penalties and interest</u> ---

(1) In the case of any person who fails to pay any tax imposed by this Article when due for which such person is liable, and such person pays the tax prior to the issuance of a demand for payment by the Treasurer, then such person shall also pay a penalty equal to five percent (5%) of the amount of tax due.

(2) In the case of any person who fails to pay any tax imposed by this Article when due for which such person is liable, and, prior to payment of the amount due, such person is issued a

demand for payment by Treasurer, then such person shall also pay a penalty equal to twenty percent (20%) of the amount of tax due.

(3) In addition to any and all penalties imposed by this Article, any person who fails to pay any tax imposed by this Article when due for which such person is liable shall also pay interest on the amount of tax due at the rate of two percent (2%) per month, or a portion thereof, on any balance remaining from time to time unpaid.

17.212 Exchange of information --- The Mayor of the City of Quincy is hereby authorized to enter into an agreement with the Illinois Department of Revenue, or any other department or agency of the State of Illinois, providing for the exchange of information between said state department or agency and the City of Quincy which will facilitate the collection and auditing of the tax imposed by this Article. Any such information received by the city pursuant to such agreement shall be kept by the Treasurer and shall be subject to the confidentiality requirements imposed by law.

17.213 Term - construction --- The tax provided under Article II (Hotel Operators Tax) of this Code shall be imposed and collected in the manner set forth herein until or unless the same shall be modified, amended or repealed by ordinance amending this Code or other ordinance of the City Council. Effective November 1, 2016, unless otherwise provided by ordinance duly adopted, the tax imposed by Section 17.203 above, shall be reduced to a rate of five percent (5%) of the rental or leasing charge. Nothing herein shall be construed to limit, restrict, or waive the right and authority of the City Council to amend, modify or repeal this Article, or to create any vested right or interest therein.

17.214 Contracts --- Contracts consistent with this ordinance may be entered into between the City Council and organization affected thereby, including, but not limited to the authority, regarding the terms and conditions for the expenditure and accounting of said tax revenues in accordance with this ordinance.

17.215 -17.218 (Reserved)

17.219 Violations --- Any person, firm or corporation who or which violates any of the provisions of this Article, in addition to such other relief as the law may afford, may be fined not less than $500.00 nor more than $1,000.00 for a first offense; and not less than $750.00 nor more than $10,000.00 for the second and every subsequent offense. For the purposes of this Article, a separate and distinct offense shall be regarded as committed each day upon which said persons, firms or corporations shall continue any such violation, or permit any such violation to exist after notification thereof.

ARTICLE III HOME RULE MUNICIPAL RETAILER'S OCCUPATION TAX

Section 17.301 **Title** --- This Article shall be known and may be cited as the "City of Quincy Home Rule Municipal Retailer's Occupation Tax Ordinance". The tax herein imposed is in addition to all other taxes imposed by the City of Quincy, the State of Illinois, or any other municipal corporation or political subdivision thereof.

17.302 **Tax imposed** --- A tax is imposed upon all persons engaged in the business of selling tangible personal property, other than an item of tangible personal property titled or registered with an agency of the State of Illinois, at retail in the City of Quincy on the gross receipts from these sales made in the course of such business. The tax shall only be imposed in ¼% increments. This tax may not be imposed on the sales of food for human consumption that is to be consumed off the premises where it is sold (other than alcoholic beverages, soft drinks and food that has been prepared for immediate consumption) and prescription and non-prescription medicines, drugs, medical appliances and insulin, urine testing materials, syringes and needles used by diabetics. Commencing July 1, 2002 the tax shall be imposed at a rate of 1 ½%. The tax imposed by the City of Quincy under this ordinance and all civil penalties that may be assessed as an incident of the tax shall be collected and enforced by the Illinois Department of Revenue as provided in Section 8-11-1 of the Illinois Municipal Code (65 ILCS 5/8-11-1).

ARTICLE IV HOME RULE CITY OF QUINCY SERVICE OCCUPATION TAX

Section 17.401 Title --- This Article shall be known and may be cited as Home Rule City of Quincy Service Occupation Tax.

17.402 Tax Imposed --- A tax is hereby imposed upon all persons engaged in the City of Quincy in the business of making sales of service at the same rate of tax imposed under Section 17.302 of this Code, of the selling price of all tangible personal property transferred by such servicemen either in the form of tangible personal property or in the form or real estate as an incident to a sale of service. Such tax shall only be imposed in ¼% increments. This tax may not be imposed on the sales of food for human consumption which is to be consumed off the premises where it is sold (other than alcoholic beverages, soft drinks and food which has been prepared for immediate consumption) and prescription and non-prescription medicines, drugs, medical appliances and insulin, urine testing materials, syringes and needles used by diabetics. This tax and all civil penalties that may be assessed as an incident thereof shall be collected and enforced by the Illinois Department of Revenue as provided in Section 8-11-5 of the Illinois Municipal Code (65 ILCS 5/8-11-5).

ARTICLE V CITY OF QUINCY USE TAX

Section 17.501 **Title** --- This Article shall be known and may be cited as the City of Quincy Use Tax Ordinance. The tax herein imposed is in addition to all other taxes imposed by the City of Quincy.

17.502 **Tax** --- A tax is hereby imposed upon the privilege of using in the municipality any item of tangible personal property which is purchased outside the City of Quincy at retail from a retailer and which is titled or registered with an agency of Illinois government. The tax shall be imposed at the rate of 3/4 of 1 percent of the selling price of such tangible property. The city herein adopts the definition of selling price as described in the Use Tax Act of the State of Illinois, Chapter 120, Illinois Revised Statutes 1987, Section 439.2.

17.503 **Tax returns** --- Every person required to collect the tax herein imposed shall on or before the last day of each month, file a return with the Comptroller's office of the City of Quincy along with payment of the tax due.

If the monthly liability does not exceed $20.00, the Comptroller may authorize an annual return and payment with a fiscal year ending January 31.

Any person or entity liable for the tax herein imposed and which shall discontinue business during said fiscal year, must file a return within thirty days of the date that business ceased.

17.504 **Penalty and fine** --- Any business liable hereunder which is delinquent more than thirty days in paying said tax shall be required to pay a penalty of 5% of the amount of the tax unpaid. Any person or entity which refuses to comply with this ordinance shall be considered in violation of an ordinance of the City of Quincy and may be fined accordingly in addition to the penalty imposed.

ARTICLE VI LOCALLY IMPOSED AND ADMINISTERED TAX RIGHTS AND RESPONSIBILITIES

Section 17.601 Title --- This ordinance shall be known as, and may be cited as, the "Locally Imposed and Administered Tax Rights and Responsibility Ordinance".

17.602 Scope --- The provisions of this ordinance shall apply to the City's procedures in connection with all of the City's Locally Imposed and Administered Taxes.

17.603 Definitions --- Certain words or terms herein shall have the meaning ascribed to them as follows:

"Act" means the "Local Government Taxpayers' Bill of Rights Act".

"Corporate Authorities" means the City's Mayor and City Council.

"Locally Imposed and Administered Tax" or **"Tax"** means each tax imposed by the City that is collected or administered by the City not an agency or department of the State. It does not include any taxes imposed upon real property under the Property Tax Code or fees collected by the City other than infrastructure maintenance fees.

"City" means the City of Quincy, Illinois.

"Notice" means each audit notice, collection notice or other similar notice or communication in connection with each of the City's locally imposed and administered taxes.

"Tax Ordinance" means each ordinance adopted by the City that imposed any locally imposed and administered tax.

"Taxpayer" means any person required to pay any locally imposed and administered tax and generally includes the person upon whom the legal incidence of such tax is placed and with respect to consumer taxes includes the business or entity required to collect and pay the locally imposed and administered tax to the City.

17.604 Notices --- Unless otherwise provided, whenever notice is required to be given, the notice is to be in writing mailed not less that seven (7) calendar days prior to the day fixed for any applicable hearing, audit or other scheduled act of the local tax administrator. The notices shall be sent by the local tax administrator as follows:

(1) First class or express mail, or overnight mail, addressed to the persons concerned at the persons' last known address; or

(2) Personal service or delivery.

17.605 Late Payment --- Any notice, payment, remittance or other filing required to be made to the City pursuant to any tax ordinance shall be considered late unless it is:

(1) Physically received by the City on or before the due date; or

(2) Received in an envelope or other container displaying a valid, readable U.S. Postmark dated on or before the due date, properly addressed to the City, with adequate postage prepaid.

17.606 Payment --- Any payment or remittance received for a tax period shall be applied in the following order:

(1) First to the tax due for the applicable period;

(2) Second to the interest due for the applicable period; and

(3) Third to the penalty for the applicable period.

17.607 <u>Certain Credits and Refunds</u> ---

(1) The City shall not refund or credit any taxes voluntarily paid without written protest at the time of payment in the event that a locally imposed and administered tax is declared invalidly enacted or unconstitutional by a court of competent jurisdiction. However, a taxpayer shall not be deemed to have paid the tax voluntarily if the taxpayer lacked knowledge of the facts upon which to protest the taxes at the time of payment or if the taxpayer paid the taxes under duress.

(2) The statute of limitations on a claim for credit or refund shall be four (4) or less years after the end of the calendar year in which the payment in error was made. The City shall not grant a credit or refund of locally imposed and administered taxes, interest, or penalties to a person who has not paid the amounts to the City.

(3) The procedure for claiming a credit or refund of locally imposed and administered taxes, interest or penalties paid in error shall be as follows:

(a) The taxpayer shall submit to the local tax administrator in writing a claim for credit or refund together with a statement specifying:

1.) The name of the locally imposed and administered tax subject to the claim;

2.) The tax period for the locally imposed and administered tax subject to the claim;

3.) The date of the tax payment subject to the claim and the cancelled check or receipt for the payment.

4.) The taxpayer's recalculation, accompanied by an amended or revised tax return, in connection with the claim; and

5.) A request for either a refund or a credit in connection with the claim to be applied to the amount of tax, interest and penalties overpaid, and, as applicable, related interest on the amount overpaid; provided, however, that there shall be no refund and only a credit given in the event the taxpayer owes any monies to the City.

(b) Within ten (10) days of the receipt by the local tax administrator of any claim for a refund or credit, the local tax administrator shall either:

1.) Grant the claim; or

2.) Deny the claim, in whole or in part, together with a statement as to the reason for the denial or the partial grant and denial.

(c) In the event the local administrator grants, in whole or in part, a claim for refund or credit, the amount of the grant for refund or credit shall bear interest at a rate equivalent to the monthly rate paid on the day-to-day accounts of the City, from the date of the overpayment to the date of mailing of a refund check or the grant of a credit.

17.608 <u>Audit Procedure</u> --- Any request for proposed audit pursuant to any local administered tax shall comply with the notice requirements of this ordinance.

(1) Each notice of audit shall contain the following information:

(a) The tax;

(b) The time period of the audit; and

(c) A brief description of the books and records to be made available for the auditor.

(2) Any audit shall be conducted during normal business hours if the date and time selected by the local tax administrator is not agreeable to the taxpayer, another date and time may be requested by the taxpayer within thirty (30) days after the originally designated audit and during normal business hours.

(3) The taxpayer may request an extension of time to have an audit conducted. The audit shall be conducted not less than seven (7) days nor more than thirty (30) days from the date the notice is given, unless the taxpayer and the local tax administrator agree to some other convenient time. In the event the taxpayer is unable to comply with the audit on the date in question, the taxpayer may request another date within the thirty (30) days, approved in writing, that is convenient to the taxpayer and the local tax administrator.

(4) Every taxpayer shall keep accurate books and records of the taxpayer's business or activities, including original source documents and books of entry denoting the transaction which had given rise or may have given rise to any tax liability, exemption or deduction. All books shall be kept in the English language and shall be subject to and available for inspection by the City.

(5) It is the duty and responsibility of every taxpayer to make available its books and records for inspection by the City. If the taxpayer or tax collector fails to provide the documents necessary for audit within the time provided, the local tax administrator may issue a tax determination and assessment based on the tax administrator's determination of the best estimate of the taxpayer's tax liability.

(6) If an audit determines there has been an overpayment of a locally imposed and administered tax as a result of the audit, written notice of the amount of overpayment shall be given to the taxpayer within thirty (30) days of the City's determination of the amount of overpayment.

(7) In the event tax payment was submitted to the incorrect legal governmental entity, the local tax administrator shall notify the local government entity imposing such tax.

17.609 <u>Appeal</u> ---

(1) The local tax administrator shall send written notice to a taxpayer upon the local tax administrator's issuance of a protestable notice of tax due a bill, a claim denial, or a notice of claim reduction regarding any tax. The notice shall include the following information:

(a) The reason for the assessment;

(b) The amount of tax liability proposed;

(c) The procedure for appealing the assessment; and

(d) The obligations of the City during the audit, appeal, refund and collection process.

(2) A taxpayer who receives written notice from the local tax administrator of a determination of tax due or assessment may file with the local tax administrator a written protest and petition for hearing, setting forth the basis of the taxpayer's request for a hearing. The written protest and petition for hearing must be filed with the local tax administrator within forty-five (45) days of receipt of the written notice of the tax determination and assessment.

(3) If a timely written notice and petition for hearing is filed, the local tax administrator shall fix the time and place for hearing and shall give written notice to the taxpayer. The hearing shall be scheduled for a date within fourteen (14) days of receipt of the written protest and petition for hearing, unless the taxpayer requests a later date convenient to all parties.

(4) If a written protest and petition for hearing is not filed within the forty-five (45) day period, the tax determination, audit or assessment shall become a final bill due and owing without further notice.

(5) Upon the showing of reasonable cause by the taxpayer and the full payment of the contested tax liability along with interest accrued as of the due date of the tax, the local tax administrator may reopen or extend the time for filing a written protest and petition for hearing. In no event shall the time for filing a written protest and petition for hearing be reopened or extended for more than ninety (90) days after the expiration of the forty-five (45) day period.

17.610 Hearing ---

(1) Whenever a taxpayer or a tax collector has filed a timely written protest and petition for hearing under Section IX, above, the local tax administrator shall conduct a hearing regarding any appeal.

(2) No continuances shall be granted except in cases where a continuance is absolutely necessary to protect the rights of the taxpayer. Lack of preparation shall not be grounds for a continuance. Any continuance granted shall not exceed fourteen (14) days.

(3) At the hearing the local tax administrator shall preside and shall hear testimony and accept any evidence relevant to the tax determination, audit or assessment. The strict rules of evidence applicable to judicial proceedings shall not apply.

(4) At the conclusion of the hearing, the local tax administrator shall make a written determination on the basis of the evidence presented at the hearing. The taxpayer or tax collector shall be provided with a copy of the written decision.

17.611 Interest and Penalties --- In the event a determination has been made that a tax is due and owing, through audit, assessment or other bill sent, the tax must be paid within the time frame otherwise indicated.

(1) Interest. The City hereby provides for the amount of interest to be assessed on a late payment, underpayment, or nonpayment of the tax, to be five percent (5%) above the monthly rate paid on the day-to-day accounts of the City.

(2) Late Filing and Payment Penalties. If a tax return is not filed within the time and manner provided by the controlling tax ordinance, a late filing penalty, of five percent (5%) above the monthly rate paid on the day-to-day accounts of the city not to exceed five percent (5%) of the amount of tax required to be shown as due on a return shall be imposed; and a late payment penalty of five percent (5%) above the monthly rate paid on the day-to-day accounts of the City not to exceed five percent (5%) of the tax due shall be imposed. If no return is filed within the time or manner provided by the controlling tax ordinance and prior to the City issuing a notice of tax delinquency or notice of tax liability, then a failure to file penalty shall be assessed equal to twenty-five percent (25%) not to exceed twenty-five percent (25%) of the total tax due for the applicable reporting period for which the return was required to be filed. A late filing or payment penalty shall not apply if a failure to file penalty is imposed by the controlling ordinance.

17.612 Abatement ---The local tax administrator shall have the authority to waive or abate any late filing penalty, late payment penalty or failure to file penalty if the local tax administrator shall determine reasonable cause exists for delay or failure to make a filing.

17.613 <u>Installment Contracts</u> --- The City may enter into an installment contract with the taxpayer for the payment of taxes under the controlling tax ordinance. The local tax administrator may not cancel any installment contract so entered unless the taxpayer fails to pay any amount due and owing. Upon written notice by the local tax administrator that the payment is thirty (30) days delinquent, the taxpayer shall have fourteen (14) working days to cure any delinquency. If the taxpayer fails to cure the delinquency with the fourteen (14) day period or fails to demonstrate good faith in restructuring the installment contract with the local administrator, the installment contract shall be canceled without further notice to the taxpayer.

17.614 <u>Statute of Limitations</u> --- The City, through the local tax administrator, shall review all tax returns in a prompt and timely manner and inform taxpayers of any amounts due and owing. The taxpayer shall have forty-five (45) days after receiving notice of the reviewed tax returns to make any request for refund or provide any tax still due and owing.

(1) No determination of tax due and owing may be issued more than 4 years maximum after the end of the calendar year for which the return for the applicable period was filed or for the calendar year in which the return for the applicable period was due, whichever occurs later.

(2) If any tax return is not filed or if during any four (4) year period for which a notice of tax determination or assessment may be issued by the City, the tax paid was less than seventy-five percent (75%) of the tax due, the statute of limitations shall be six (6) years maximum after the end of the calendar year in which return for the applicable period was due or end of the calendar year in which the return for the applicable period was filed.

(3) No statute of limitation shall apply if a fraudulent tax return was filed by the taxpayer.

17.615 <u>Voluntary Disclosure</u> --- For any locally imposed and administered tax for which a taxpayer has not received a written notice of an audit, investigation, or assessment from the local tax administrator, a taxpayer is entitled to file an application with the local tax administrator for a voluntary disclosure of the tax due. A taxpayer filing a voluntary disclosure application must agree to pay the amount of tax due, along with interest of one percent (1%) per month, for all periods prior to the filing of the application but not more than four (4) years before the date of filing the application. A taxpayer filing a valid voluntary disclosure application may not be liable for any additional tax, interest of penalty for any period before the date the application was filed. However, if the taxpayer incorrectly determined and underpaid the amount of tax due, the taxpayer is liable for the underpaid tax along with applicable interest on the underpaid tax, unless the underpayment was the result of fraud on the part of the taxpayer in which case the application shall be deemed invalid and voice. The payment of tax and interest must be made by no later than ninety (90) days after the filing of the voluntary disclosure application or the date agreed to by the local tax administrator. However, any additional amounts owed as a result of an underpayment of tax and interest previously paid under this Section must be paid within ninety (90) days after a final determination and the exhaustion of all appeals of the additional amount owed or the date agreed to by the local tax administrator, whichever is longer.

17.616 <u>Publication of Tax Ordinances</u> --- Any locally administered tax ordinance shall be published via normal or standard publishing requirements. The posting of a tax ordinance on the

Internet shall satisfy the publication requirements. Copies of all tax ordinances shall be made available to the public upon request at the City Clerk's office.

17.617 <u>Internal Review Procedure</u> --- The local tax administrator shall establish an internal review procedure regarding any liens filed against any taxpayers for unpaid taxes. Upon a determination by the local tax administrator that the lien is valid, the lien shall remain in full force and effect. If the lien is determined to be improper, the local tax administrator shall:

(1) Timely remove the lien at the City's expense;
(2) Correct the taxpayer's credit record; and
(3) Correct any public disclosure of the improperly imposed lien.

17.618 <u>Application</u> --- This ordinance shall be liberally construed and administered to supplement all of the City's tax ordinances. To the extent that any tax ordinance is in conflict with or inconsistent with this ordinance, this ordinance shall be controlling.

CHAPTER 18

ALCOHOLIC LIQUOR DEALERS

Section 18.001 **<u>Definition</u>** --- Unless the context otherwise requires, the following terms as used in this Chapter shall be construed according to the definitions given below.

Alcoholic liquor: any spirits, wine, beer, ale or other liquid containing more than one-half of one percent of alcohol by volume, which is fit for beverage purposes.

Retail sale: The sale for use or consumption and not for resale.

Restaurant: Any public place kept, used, maintained, advertised and held out to the public as a place where meals are served, and where meals actually are served and regularly served, without sleeping accommodations, such space being provided with adequate and sanitary kitchen and dining room equipment and capacity and having employed therein a sufficient number and kind of employees to prepare, cook and serve suitable food for its guests.

Hotel: Every building or other structure, kept, used, maintained, advertised and held out to the public to be a place where food is actually served and consumed and sleeping accommodations are offered for adequate pay to traveler and guests, whether transient, permanent or residential, in which twenty-five or more rooms are used for the sleeping accommodations and dining rooms being conducted in the same building or buildings in connection therewith and such building or buildings, structure or structures being provided with adequate and sanitary kitchen and dining room equipment and capacity.

Club: A corporation organized under the laws of this state, not for pecuniary profit, solely for the promotion of some common object other than the sale and consumption of alcoholic liquors which conforms to the definition of a club in Chapter 43, paragraph 95 of the Illinois Revised Statutes.

18.002 **<u>License required</u>** --- It shall be unlawful to sell or offer for sale at retail in the city any alcoholic liquor without having a retail liquor dealer's license, or in violation of the terms of such license.

18.003 **<u>Application</u>** --- Applications for such licenses shall be made to the Mayor in writing, signed by the applicant, if an individual, or by at least two members of a partnership, if the applicant is a partnership or by the president and secretary thereof, if a club or corporation, verified by oath or affidavit, and shall contain the following statements and information:

(1) The name, age and address of the applicant in the case of an individual; in the case of a co-partnership, the persons entitled to share in the profits thereof; and in the case of a corporation, the objects for which organized, the names and addresses of the officers and directors, the name and address of any person owning more that 5% of the stock, and the name and address of the person who will manage the public place.

(2) The citizenship of the applicant, the place of his birth, and if a naturalized citizen, the time and place of his naturalization.

(3) The character of business of the applicant and in case of a corporation, the objects for which it was formed.

(4) The length of time said applicant has been in business of that character, or in the case of a corporation the date when its charter was issued.

(5) The amount of goods, wares, and merchandise on hand at the time application is made.

(6) The location and description of the premises or place of business which is to be operated under such license.

(7) A statement whether applicant has made application for a similar or other license on premises other than described in this application and the disposition of such application.

(8) A statement that applicant has never been convicted of a felony and is not disqualified to receive a license by reason of any matter or thing contained in this Chapter, laws of this state, or the ordinances of the city.

(9) Whether a previous license by any state or subdivision thereof, or by the federal government has been revoked and the reasons thereof.

(10) A statement that the applicant will not violate any of the laws of the State of Illinois, or of the United States, or any ordinance of the city in the conduct of his place of business.

(11) A written certification of the City of Quincy Fire Chief that the premises subject to such license has been inspected and found in compliance with the provisions of section 21.201 (adoption of 2000 International Fire Code) of this code and the NFPA Life Safety Code.

18.004 **Restriction on licenses** --- No such license shall be issued to:

(1) A person who is not a resident of the city.

(2) A person who is not of good character and reputation in the community in which he resides.

(3) A person who is not a citizen of the United States.

(4) A person who has been convicted of a felony under the laws of any state.

(5) A person who has been convicted of being the keeper of or is keeping a house of ill-fame.

(6) A person who has been convicted of pandering or other crime or misdemeanor opposed to decency and morality.

(7) A person whose license under this Chapter has been revoked for cause.

(8) A person who at the time of application for renewal of any license issued hereunder would not be eligible for such license upon a first application.

(9) A co-partnership unless all of the members of said co-partnership shall be qualified to obtain a license.

(10) A corporation, if any officer, manager or director thereof, or any stockholder or stockholders owning in the aggregate more than five per cent of the stock of such corporation, would not be eligible to receive a license hereunder for any reason other than citizenship and residence within the city.

(11) A person whose place of business is conducted by a manager or agent unless said manager or agent possesses the same qualifications required of the licensee.

(12) A person who has been convicted of a violation of any Federal or State law concerning the manufacture, possession or sale of alcoholic liquor, or who shall have forfeited his bond to appear in court to answer charges for any such violation.

(13) A person who does not own the premises for which a license is sought or does not have a lease thereon for the full period for which the license is issued.

(14) Any law enforcing public official, any Mayor or Alderman, and no such official shall be interested in any way, either directly or indirectly, in the manufacture, sale or distribution of alcoholic liquor.

(15) Any person, firm or corporation not eligible for a state retail liquor dealer's license.

(16) The Mayor, through the office of Chief of Police, will ascertain the qualifications of prospective applicants. Any change in managers, corporation officers, directors or stockholder(s)

owning over five percent (5%) of the stock would require a background investigation of the new manager, officers, directors, or stockholder(s) before the issuance of any license. All such changes will be reported to the office of the Mayor of the City of Quincy within five (5) days of their occurrences.

(17) Any person who knowingly shares in any manner a beneficial interest with anyone convicted of a felony within the last ten years including but not limited to the rental or ease payment by a licensee or proposed licensee to anyone convicted of a felony within the last ten years.

18.005 License required --- It shall be unlawful to sell, barter, transport, deliver, furnish, possess, keep or offer for sale at retail any alcoholic liquor, or engage in or conduct a retail liquor business, or conduct any place for the sale of alcoholic liquor within the corporate limits of the city without having a retail liquor dealer's license, or in violation of the terms of such license.

18.006 Classification --- Subject to the limitations, conditions and restrictions hereinafter set forth, eight (8) classes of licenses may be issued pursuant to the terms of this Article which shall be designated as:

Class A..."Retail Liquor" which shall authorize and entitle the licensee to sell at retail all types of alcoholic liquor for consumption on the premises as well as in package form.

Class B..."Package Liquor" which shall authorize and entitle the licensee to sell at retail all types of alcoholic liquor in package form only, and not for consumption on the premises.

Class C..."Special Events". A special event retailer's license shall permit the licensee to purchase alcoholic liquors from an Illinois licensed distributor and shall allow the licensee to sell and offer for sale, at retail, alcoholic liquors for use or consumption, but not for resale in any form and only at the location and on the specific, limited, dates designated for the special event in the license.

In addition to such other requirements as may hereafter be specified, a Class C license shall be subject to the following conditions:

The application for the "Special Event License" shall identify the purpose of the special event, the location where the alcoholic liquor is to be distributed for use or consumption, the duration for which the license is sought, and other information as is required by the Mayor.

An applicant for the special use permit license must also submit with the application proof satisfactory to the Mayor that the applicant will provide dram shop liability insurance to the maximum limits (235 ILCS 5/5-1) required for licenses issued by Illinois Liquor Control Commission.

There shall be two categories of "Special Event Licenses" as follows:

Class C-1… "Special Event Not-For-Profit". For purposes hereof, "Special Event Not-For-Profit" means an event conducted by an educational, fraternal, political, civic, religious or non-profit organization.

A "Special Event Not-For-Profit" retailer's licensee may purchase the alcoholic liquors from a licensed retailer if the licensee purchases less than $500 of alcoholic liquors for the special event. An applicant for a "Special Event Not-For-Profit" retailer license must furnish with the application: (a) a resale number issued under Section 2c of the Illinois Retailers' Occupation Tax Act or evidence that the applicant is registered under Section 2a of the Retailers' Occupation Tax Act, (b) a current, valid exemption identification number issued under Section

1g of the Retailers' Occupation Tax Act, and a certification to the Mayor that the purchase of alcoholic liquors will be a tax-exempt purchase, or (c) a statement that the applicant is not registered under Section 2a of the Retailers' Occupation Tax Act, does not hold a resale number under Section 2c of the Retailers' Occupation Tax Act, and does not hold an exemption number under Section 1g of the Retailers' Occupation Tax Act, in which event the Mayor shall set forth on the special event retailer's license a statement to that effect.

Class C-2… "Special Event (For Profit)". For purposes hereof a "Special Event (For Profit)" license means a license issued for a special event to any person, firm, business or entity other than a not-for-profit entity, as defined above.

Class D..."Multi-Bar" which shall authorize and entitle the licensee to have two or more bars located in two or more rooms on the licenses premises. This shall include banquet and ballrooms.

Class E..."Keg Lease/Sales" which shall authorize and entitle the licensee to sell, lease or transfer kegs to persons (other than licensees) in accordance with Section 18.040 (Keg Permit and Permit Stickers) of this Code.

Class F..."Caterer Retailers License" which shall authorize and entitle the licensee to serve alcoholic liquors as an incidental part of a food service that serves prepared meals which excludes the serving of snacks as the primary meal, either on or off-site from a licensed premises.

Class G… "Special Use Permit". Allows an Illinois licensed retailer holding a City of Quincy liquor license (other than a Class C-1 or C-2 license) to transfer a portion of its alcoholic liquor inventory from its retail licensed premises to the premises specified in the Class G license, and to sell or offer for sale at retail, only in the premises specified in the license hereby created, the transferred alcoholic liquor for use or consumption, but not for resale in any form. A "Special Use Permit" license may be granted for the following time periods: three (3) days or less; four (4) days or more days to a maximum of 15 days per location in any 12 month period.

The license shall be issued for a specified time period.

The application for the "Special Use Permit" shall identify the purpose of the "Special Use Permit", the location where the alcoholic liquor is to be distributed for use or consumption, the duration for which the license is sought, and other information as is required by the Mayor.

An applicant for the "Special Use Permit" license must also submit with the application proof satisfactory to the Mayor that the applicant will provide dram shop liability insurance to the maximum limits (235 ILCS 5/5-1) required for licenses issued by Illinois Liquor Control Commission.

18.007 **<u>Fee</u>** --- The semi-annual fees for the classifications of licenses above set out shall be as follows:

Class A...$350.00
Class B...$400.00
Class C-1…$50.00 per day for up to three (3) days plus $150.00 for any period from four (4) to fifteen (15) days.
Class C-2…$400.00 for any period from one (1) to fifteen (15) days.
Class D...$400.00
Class E...$ 50.00 (annual fee)

Class F...$400.00
Class G…$50.00 per day for up to three (3) days plus $150.00 for any period from four (4) to fifteen (15) days.

All licenses shall be signed by the Mayor and City Clerk. No person shall, in the city, engage in any business or occupation or exercise any privilege mentioned or referred to in this Article without first having obtained a license therefore, and a license is hereby expressly required for so engaging in any business or occupation or for the exercising of such privilege; and each person, firm, partnership, club, association or corporation engaged in any business or occupation or exercising any privilege for which a license is required under this Article shall pay to the city for such license the semi-annual fee herein required for that particular kind of business, occupation or privilege.

18.008 <u>Cabaret or night club license</u> ---

(1) **Generally**: In addition to the above classifications, licenses shall be issued for the establishment of a cabaret or night club which license shall permit the sale of alcoholic liquor on the premises subject to the following limitations and regulations.

(2) **Fee**: An annual license fee of twenty-five hundred dollars ($2500.00), shall be payable in advance on the first day of January of each year for a renewal license.

(3) (a) **Hours of operation**: Establishments holding a cabaret or night club license may be open for operation during any "business day". "Business day" as used herein shall mean any period of time from 11:00 a.m., until the hour of 2:30 a.m., of the following day every day except Saturdays when the closing time may be extended until 3:30 a.m. of the following day. Notwithstanding the foregoing said licensed establishments may operate and be open until 4:30 a.m., on January 1st of each year. Except as provided above said establishments shall not be open, nor shall any person or licensee sell or offer for sale at retail any alcoholic liquor, or furnish or give away, or allow or permit the same to be consumed on the licensed premises, or any other premises under the control, directly or indirectly, of the licensee.

No licensee or their agent shall permit any person, other than those paid employees, to remain upon or enter the licensee's premises during closing hours.

(b) Closing time is computed by the time convention in effect at the beginning of the business day. If, for example, standard time is in effect at 11:00 a.m. of the business day, standard time shall be used to fix closing time.

(4) (a) **Minors absolutely prohibited**: No establishment licensed under this Section shall permit any person under the age of 21 at any time of a business day after 12:30 a.m. in which the establishment shall sell or offer for sale any alcoholic liquors or furnish or give away or allow or permit the same to be consumed on the licensed premises; provided, however, a person under 21 years of age but at least 18 years of age may be employed in a night club other than for the purpose of attending a bar or drawing, pouring, mixing or serving any alcoholic liquor.

(b) **Exception**:

1.) A person under twenty-one (21) years of age, but at least eighteen (18) years of age, may be employed in a night club, other than for the purpose of attending a bar or drawing, pouring, mixing or serving any alcoholic liquor.

2.) Minors may be admitted in a nightclub, if accompanied by a parent or legal guardian.

(c) **Discretion in license:** The licensee of any establishment licensed under this section may for any or all days or an y combination of days elect to limit attendance to said establishment to persons 21 years and older. On so electing, the licensee must apply the limitation uniformly throughout that business day. Nothing in this Section 18.008 requires a licensee to adopt a policy of admitting minors to an establishment so licensed.

(d) Licensees shall have clearly visible signage, legible from all points of entry to the cabaret and/or night club stating the following: "NO ONE UNDER 21 PERMITTED ON THESE PREMISES AFTER 12:30 A.M." and "$1,000 MINIMUM FINE FOR DIVERTING ALCOHOLIC BEVERAGES TO A MINOR. – City ordinances."

(5) **Revocation - multiple suspensions**: In addition to such other grounds for revocation of licenses as provided under this Chapter, the Mayor shall revoke any cabaret or night club license held by a licensee who violates any of the provisions of this Chapter, for any violation of any state law or regulation pertaining to the sale of alcoholic liquor, if said license has previously been suspended on at least three separate occasions within a period of three (3) years from the date of the most current violation.

18.009 License restriction for cabarets and night clubs --- It shall be unlawful for any holder of a cabaret or night club license to operate a tavern or to hold a regular retail liquor license; and it shall be unlawful for any holder of a regular retail liquor license to operate a cabaret or night club in connection therewith.

(1) **Exception**: Notwithstanding the foregoing, the holder of night club license may obtain a regular retail liquor license, provided the regular retail liquor operations located within a separately dedicated and delineated space within the same building or premises where the night club is located. Said operation shall be separately designated and maintained as provided in Section 18.030 hereof.

18.010 License year --- The semi-annual license period, under this Article, shall commence on the first day of January and the first day of July in each year and all licenses shall expire on the thirtieth day of June and the thirty-first day of December then next succeeding. All fees shall be due and payable in advance of the first day of each license period.

18.011 Sale with meals --- No person shall receive a license to sell alcoholic liquor upon any premises as a restaurant or as a club unless it has the qualification respectively described in this Article.

18.012 Exemptions --- Nothing herein contained shall prevent the possession and transportation of alcoholic liquor for the personal use of his family, the possession himself and guests, and nothing herein contained shall prevent any duly licensed practicing physician or dentist from possessing or using alcoholic 1iquor in the strict practice of his profession, or any hospital or other institution caring for the sick and diseased, from possessing and using alcoholic liquor for the treatment of bona fide patients or such hospital or other institution; and provided further that any drug store employing a licensed pharmacist may possess and use alcoholic liquors in the concoction or prescriptions of duly licensed physicians; and provided further that

the possession and dispensation of wine by an authorized representative of any church for the purpose of conducting any bona fide rite or religious service or ceremony conducted by such church shall not be prohibited by this Article. But druggists and pharmacists selling alcoholic liquor other than in concoction of prescriptions of duly licensed physicians shall be deemed retailers.

18.013 <u>Premises used for dwellings</u> --- Except in the case of hotels and clubs, no alcoholic liquor shall be sold at retail upon any premises which has any access which leads from such premises to any other portion of the same building or structure used for dwelling purposes. This provision shall not prevent any connection between such premises and such other portion of the building or structure which is used only by the licensee, his family and personal guests.

18.014 <u>Sale in public buildings</u> --- No alcoholic liquors shall be sold or delivered in any building belonging to or under the control of the city. No person shall furnish or suffer to be furnished any alcoholic liquors to any person confined in any jail or house of correction except upon a physician's prescription for medicinal purposes.

18.015 <u>Original package</u> --- No person excepting a manufacturer or a distributor or importing distributor shall fill or refill in whole or in part any original package of alcoholic liquor, and it shall be unlawful for any person to have in his possession for sale at retail any bottles, casks or other containers containing alcoholic liquor, except in the original package. The phrase “original" shall mean any bottle, flask, jug, can, cask, barrel, keg, hogshead or other receptacle or container whatsoever used, corked or capped, sealed and labeled by the manufacturer of alcoholic liquor to contain and to convey any alcoholic liquor.

18.016 <u>Transportation or possession of alcoholic liquor in a motor vehicle</u> ---

(1) Except as provided in paragraph (3), no driver may transport, carry, possess or have any alcoholic liquor within the passenger area of any motor vehicle except in the original container and with the seal unbroken.

(2) Except as provided in paragraph (3), no passenger may carry, possess or have any alcoholic liquor within any passenger area of any motor vehicle except in the original container and with the seal unbroken.

(3) This section shall not apply to the passenger on a chartered bus when it is being used for purposes for which chartered buses are ordinarily used or on a motor home or mini motor home as defined in Section 1-145.01 of the Illinois Vehicle Code. However, the driver of any such vehicle is prohibited from consuming or having any alcoholic liquor in or about the driver's area. Any evidence of alcoholic consumption by the driver shall be prima facie evidence of such driver's failure to obey this section.

(4) The exemption applicable to chartered busses under paragraph (3) does not apply to any chartered bus being used for school purposes.

18.017 <u>Imitations - unhealthful - seal</u> --- No alcoholic liquor labeled as "whiskey" or "gin" shall be sold at retail in the city unless the entire alcoholic content thereof, except flavoring materials, is a distillate of fermented mash of grain or mixture of grains. Alcoholic liquor of the type of whiskey or gin not conforming to this requirement may be sold at retail if labeled

"imitation whiskey" or "imitation gin" as the case may be. No spirits shall contain any substance, compound or ingredient which is injurious to health or deleterious for human consumption. No package shall be delivered by any manufacturer, distributor or importing distributor or received by any licensee unless the same shall be securely sealed so that the contents thereof cannot be removed without breaking the seal so placed thereon by said manufacturer; and no licensee shall sell or have in his possession or use any package or container which does not comply with this Section or does not bear evidence that said package when delivered to him complied therewith.

18.018 Disposition of fees --- All such license fees shall be paid to the Mayor at the time application is made and shall be forthwith by him turned over to the City Treasurer. In the event that the license applied for is denied, the fee shall be returned to the applicant; if the license is granted, then the fee shall be deposited in the General Corporate Fund or in such other fund as shall be designated by the city Council by proper action.

18.019 Record of license --- The Mayor shall keep a complete record of all such licenses issued by him under this Article and shall furnish the City Clerk, City Treasurer and Chief of Police each with a copy thereof. Upon the issuance of any new license or the revocation of any old license, the Mayor shall give written notice of such action to each of these officers within forty-eight hours of such action, and the copies of such record and the notice of such action furnished and give to the City Clerk shall by him be presented at the next meeting of the Council.

18.020 Transfer of license --- A license shall be purely a personal privilege good for not to exceed six months after issuance unless sooner revoked as in this Article provided, and shall not constitute property nor shall it be subject to attachment, garnishment or execution nor shall it be available or transferable, voluntarily or involuntarily or subject to being encumbered or hypothecated. Such license shall cease upon the death of the licensee and shall not descend by the laws of testate or intestate revolution provided that executors or administrators of the estate of any deceased licensee, and the trustee of any insolvent or bankrupt licensee, when such estate consists in part of alcoholic liquor may continue the business of the sale or manufacture of alcoholic liquor under the order of the appropriate court and may exercise the privileges of the deceased or insolvent or bankrupt licensee after the death of such decedent, or such insolvency or bankruptcy until the expiration of such license but not longer than six months after the death, bankruptcy or insolvency of such licensee. A refund shall not be made of that portion of the license fee paid for any period in which the licensee shall be prevented from operating except in the case of entry into the armed forces or death of the licensee.

18.021 Renewal of license --- Any licensee may renew his license at the expiration thereof provided that he is then qualified to receive a license and the premises for which such renewal license is sought are suitable for such purpose; provided further that the renewal privilege herein provided for shall not be construed as a vested right which shall in any case prevent the Mayor from decreasing the number of licenses to be issued within his jurisdiction.

18.022 Change of location --- A retail liquor dealer's license shall permit the sale of alcoholic liquor only in the premises described in the application and license. Such location may be changed only upon a written permission to make such change issued by the Mayor. No change of

location shall be permitted unless the proposed new location is a proper one for the retail sale of alcoholic liquor under the laws of this state and the ordinance of the city.

18.023 <u>Peddling</u> --- It shall be unlawful to peddle alcoholic liquor in the city.

18.024 <u>Sanitary conditions</u> --- All premises used for the retail sale of alcoholic liquor or for the storage of such liquor for sale shall be kept in full compliance with the ordinance regulating the condition of premises for the storage and sale of food for human consumption.

18.025 <u>Employees</u> --- It shall be unlawful to employ in any premises used for the retail sale of alcoholic liquor any person who is afflicted with, or who is a carrier of, any contagious, infectious or venereal disease; and it shall be unlawful for any person who is afflicted with or is a carrier of any such disease to work in or about any premises or to engage in any way in the handling, preparation or distribution of such liquor.

18.026 <u>Location requirements</u> ---

(1) **Generally**: Except as otherwise provided, no license shall be issued for the sale at retail of any alcoholic liquor within 100' of any church, school (other than an institution of higher learning) hospital, home for aged or indigent persons or for veterans, their spouses or children or any military or naval station.

(2) **Sale of liquor not the principal business**: Except as to churches, day care, preschool, primary or secondary schools (public and private), the foregoing limitation shall not apply to hotels offering restaurant service, regularly organized clubs, or to restaurants, food shops or other places where the sale of alcoholic liquors is not the principal business carried on.

(3) **Renewal of existing license**: The distance requirement set forth in subparagraph (1) above shall not apply to the renewal of a license for the sale at retail of alcoholic liquor on premises within 100' of any church or school where such church or school has been established within such 100' since the issuance of the original license.

(4) **Measurement**: In the case of a church, the distance of 100' shall be measured to the nearest part of any building used for worship services or educational programs and not to property boundaries.

(5) **Special events**: Nothing in this section shall prohibit the issuance of a license to a church or private school to sell at retail alcoholic liquor if any such sales are limited to periods when groups are assembled on the premises solely for the promotion of some common object other than the sale or consumption of alcoholic liquors.

(6) **Other regulations**: All premises used for the sale of alcoholic liquors shall, additionally, be in compliance with all applicable provisions governing such premises, including, but not limited to, zoning regulations established by Chapter 29 of this Code. Such regulations shall include, but not be limited to the requirements of having a special permit in C1B districts (or districts which, as a non-conforming use, would be treated as a C1B district). In the event of any conflict, that most restrictive shall apply.

18.027 <u>Closing hours</u> --- Except as otherwise provided herein no person or licensee hereunder shall sell or offer for sale at retail any alcoholic liquors or furnish or give away, or allow or permit the same to be consumed on the licensed premises, or any other premises under the control, directly or indirectly of the license, between the hours of one o'clock and five o'clock

a.m. of any day except that on January 1st of each year said persons or licensees hereunder may sell or offer for sale at retail alcoholic liquors, and allow same to be consumed on the licensed premises, or other premises under the control, directly or indirectly of the licensee, between the additional hours of one o'clock a.m. and 4:30 o'clock a.m. of said day.

No licensee or their agent shall permit any person, other than those paid employees, to remain upon or enter the licensed premises during closing hours.

18.028 <u>Election days</u> --- (This section has been changed by Illinois Revised State Statutes and it is now permissible for the sale at retail of alcoholic liquor.)

18.029 <u>Music and dancing</u> --- No person shall indulge in dancing and no licensee shall permit any dancing and no music shall be made or played, no orchestra shall play or be permitted to play, and no musical instrument shall be played in any premises licensed under this Article for the retail sale of alcoholic liquor, except in clubs, hotels, cabarets, night clubs, amusement parks and regularly licensed dance halls or pavilions; provided, however, that the provisions of this Section shall not apply to victrolas and radios except that they shall not be placed or operated so that sound is audible outside of the licensed premises after eleven o'clock at night and between the hours of eleven o'clock p.m. and five o'clock a.m. of any day; and provided further that there shall not be used in connection with such victrolas and radios any loud speakers for the purpose of reproducing sound to the outside of the licensed premise .

18.030 <u>Description of the premises</u> --

(1) **Generally**: Every licensee shall state the legal numerical block description of the premises in which the licensee shall operate under such license and every licensee shall confine his operations strictly to such licensed premises; and no alcoholic liquor shall be sold or delivered by him or his agents or employees outside of said licensed premises. To those licensee's who are engaged in the sale of packaged liquors allowing delivery off the premises by the seller, provided the buyer personally has purchased said liquor on the premises.

(2) **Multiple license**: A licensee holding both a "night club license" and a "regular retail liquor dealer’s license" (as defined above) for operation within the same building or premises as allowed in Section 18.009(1) shall provide a map or diagram (with the license application) specifically describing and delineating the floor plan and space within which each operation (night club) and (regular retail liquor license sales) shall be separately maintained and conducted. The special restrictions and regulations applicable respectively to such separate licenses shall be observed as applicable for the separate licenses premises.

18.031 <u>Lighting</u> --- All premises and/or rooms where liquor is sold for consumption on the premises and any rooms accessible to the patrons thereof shall be reasonably lighted to afford patrons safe movement while therein. While at times natural lighting may afford sufficient lighting as herein required the premises and all parts thereof accessible to the patrons shall be equipped with electrical lighting which shall be turned on to provide for safe movement when natural light does not provide for the patrons safe movement therein. In addition to the above, all premises as herein described must be able to be fully lighted in the case of an emergency or for inspection by law enforcement authorities.

18.032 Posting --- Every licensee shall cause his license to be hung in plain view in a conspicuous place on the licensed premises.

18.033 Sale to intoxicated persons --- It shall be unlawful for any holder of a retail liquor dealer's license to sell, deliver or give any liquor to an intoxicated person.

18.034 Attendance at bar --- It shall be unlawful for any person under twenty-one (21) years of age to attend bar or to draw, pour or mix any alcoholic liquor in any licensed retail premises.

Any person eighteen (18) years of age or over, however, may serve alcoholic liquor as a waiter or waitress in any licensed retail premises, and may also sell package liquor it any retail store properly licensed.

18.035 Revocation - suspension --- The Mayor may revoke or suspend any retail liquor dealer's license for any violation of any provisions of this Chapter, or for any violation of any state law pertaining to the sale of alcoholic liquor.

Further upon revocation of any retail liquor dealer's license, after any required hearing, the Mayor may prohibit the maintenance or housing of any licensed retail liquor establishment on the premises described in the revoked license for a period not to exceed one (1) year.

18.036 Possession of or sale of alcohol to persons under 21 years of age --- It shall be unlawful for any person under 21 years of age to drink, purchase or possess alcoholic liquor, or to misrepresent his or her age for the purpose of purchasing or obtaining alcoholic liquor in any tavern or other place in the city where alcoholic liquor is sold.

It shall be unlawful to sell, give, or deliver alcoholic liquor to any person under 21 years of age or to permit any persons under 21 years of age to consume alcoholic liquor.

If a licensee or his agents or employees believes or has reason to believe that a sale or delivery of alcoholic liquor is prohibited because of the non-age of the prospective recipient, he shall, before making such sale or delivery, demand presentation of the official City of Quincy, Illinois Liquor Identification Card, or a military identification card, or driver's license issued by a competent authority containing proof of age and a photograph.

The official City of Quincy, Illinois liquor identification card shall be laminated and shall contain the following information: name, address, date of birth, a colored photograph and signature of applicant and shall bear the official seal of the City of Quincy. The cost of the liquor identification card shall be $3.00.

No person shall transfer, alter or deface such an identification card, use the identification card of another, carry or use a false or forged identification card of any kind, or obtain an identification card by means of false information.

If a licensee or his agents or employees sells or delivers alcoholic liquor to a person of non-age after examining the official City of Quincy identification card bearing proof of age and a photograph, or a military service card bearing proof of age and a photograph, or a valid driver's license issued by a competent authority and bearing proof of age and a photograph, and believes from said examination the person is of legal age, proof of such examination by a licensee or his agents or employees then charged with violation of this Section, shall be a valid legal defense to said charge.

"Possess", as used herein shall mean to physically or constructively possess a container or receptacle containing an alcoholic liquor or to possess by consumption any amount of alcoholic liquor. Any evidence of consumption of alcoholic liquor by a person under 21 years of age shall be prima facie evidence that said person is in possession of alcohol within the meaning of this Section.

18.037 <u>Reporting to police</u> --- All licensees, their agents or employees shall immediately report to the city police any altercations known as "fist fights" which shall include any physical abuse of another, that occurs on the tavern premises and shall further immediately report to the city police if any tavern patron, other than a police official, is known to be in possession of a gun, knife, or other deadly weapon.

18.038 <u>Appeal from order of local commissioner</u> --- In the event an appeal is taken from an order or action of the local liquor control commissioner, the appeal shall be limited to a review of the official record of the proceedings of said local liquor control commissioner.

18.039 <u>Consumption and possession of alcoholic liquor or beverage on public streets, alleys and sidewalks, and lots</u> --

(1) **Consumption and possession unlawful**: It shall be unlawful for any person to either consume or drink any alcoholic liquor or beverage, or, alternatively, possess any alcoholic liquor or beverage not in its unopened or uncapped package, while upon any public street, public alley, public sidewalk or public parking lot within the corporate limits of the City of Quincy.

(2) **Definitions**: For purposes of this Section, the following definitions shall apply:

"**Public street**" means the entire width between boundary lines of every way publicly maintained when any part thereof is open to the use of the public for purposes of vehicular travel.

"**Public alley**" means a public way within a block, generally giving access to the rear of lots or buildings and not used for general traffic circulation.

"**Public sidewalk**" means that portion of a street between the curb lines, or the lateral lines of a roadway, and the adjacent property lines, intended for use of pedestrians, and also including any grassways or other areas between that portion of a street actually improved, designed and used for vehicular traffic and the adjacent property lines not subject to a right-of-way

"**Public parking lot**" means any place available to the general public or the customers of a place, establishment or business open to the general public, whether or not publicly owned, used for the standing of a vehicle, whether occupied or not.

"**Package**" means any bottle, flask, jug, can, cup, cask, barrel, keg, hogshead or other receptacle or container whatsoever used to contain and to convey any alcoholic liquor or beverage. A "package" shall be considered "unopened or uncapped" if (i) corked or capped, sealed and labeled by the manufacturer of the alcoholic liquor or beverage, or (ii) the seal or other method of closure is broken, but is resealed, recapped or closed preventing its consumption without again breaking the seal or otherwise opening the package. A cup or glass designed for drinking beverages shall not be considered unopened or uncapped irrespective of the purported method of resealing, recapping or closure.

(3) **Exception**: This Section shall not apply to real estate owned, operated and controlled by the Quincy Park District. This Section shall not apply in or on any public street, public alley, public sidewalk or public parking lot when a permit has been issued by the Mayor and City of Quincy authorizing the drinking, consumption or possession of alcoholic liquor or beverages on the same. Such permit shall be limited to the duration prescribed in the permit and shall apply only to those public streets, public alleys, public sidewalks or public parking lots, or portions thereof, specifically described in said permit. Applications for such permit shall be made to the City Clerk and referred to the Mayor and City Council. No permits shall be issued except with the approval of both the Mayor and City Council.

(4) **Permitting open liquor to leave licensed premises**: It shall be unlawful for any licensee or his agents to leave or allow another to leave the licensed premises while in possession of an open container of an alcoholic beverage.

The licensee shall post a sign at each exit. This sign shall not be less than 8 inches by 10 inches and shall be bold and easily read letters. The sign shall read as follows:

"NO PERSON SHALL LEAVE THIS ESTABLISHMENT WITH AN UNSEALED CONTAINER CONTAINING AN ALCOHOLIC BEVERAGE. PERSONS DOING SO ARE SUBJECT TO ARREST".

18.040 <u>Keg and permit stickers</u> ---

(1) **Definitions**: For purposes of this Section, the following definitions shall apply:

"**Keg**" means a beer keg or similar cask or barrel designed and used for storage and dispensing of beer.

"**Licensee**" means a person, firm or entity issued a retail liquor dealer's license under this Chapter 18.

"**Liquor Control Commissioner**" means the Mayor of the City of Quincy.

(2) **Permit sticker required**: Except as otherwise provided herein, it shall be unlawful for any person who is not a licensee to possess, lease, purchase, or attempt to possess, lease or purchase a keg within the City of Quincy without having first obtained a permit and permit sticker as set forth herein. It shall be unlawful for any person to possess a keg within the City of Quincy which does not have a permit sticker affixed thereto.

(a) **Exception**: No permit or sticker under this Section shall be required for a keg utilized in a licensed premise for licensed sales of alcoholic liquor, or for a keg utilized for the sale of alcoholic liquor pursuant to any licensed permit issued under this Chapter of the Quincy Municipal Code.

(3) **Issuance of permit stickers - license - records**: No licensee shall sell, lease or transfer possession of any keg for which a permit sticker is required (as provided above) unless such license has first obtained a Class E (Keg lease/sales) license. It shall be unlawful for any licensee or licensee's agent or employee to sell, lease or transfer possession of a keg to any person who does not first obtain from the licensee, a permit and permit sticker issued by the City of Quincy, subject to the restrictions and limitations provided herein. The licensee or licensee's agent or employee shall cause the permit sticker to be affixed to the keg in a conspicuous place before allowing the keg to be removed from the premises. A duplicate sticker shall be affixed by the licensee to the permit application form (described below). The licensee shall maintain a record of all permits obtained for the purchase, lease or possession of kegs for a period of twelve

(12) months. The application form (with attached duplicate sticker) shall be mailed or delivered to the Quincy Police Department within fourteen (14) days of the sale, lease or delivery of the keg. The records maintained by the licensee shall, in addition, be presented for inspection by the Liquor Control Commissioner upon request.

Any person of lawful age may obtain a keg permit and permit sticker subject to the limitations, exceptions, and fees set forth herein.

(a) The permit shall be issued for each keg without charge.

(b) Any person desiring to obtain a keg permit shall complete an application form provided by the city setting forth the applicant's full name, address and telephone number; the address and date(s) where the applicant will be possessing the keg; the name and telephone number of the owner or lessor of that address; and said application shall contain a statement and verification that the person is eligible to obtain a permit sticker within the meaning and restrictions of sub-section (c) below. In addition, the applicant must provide proof of identify and age in the form of a valid driver's license or other picture identification. Falsifying any information on the permit application shall constitute a violation of this ordinance.

(c) No person shall obtain or be issued a keg permit sticker if that person has been adjudicated in violation of any provision of Chapter 18 of the Quincy Municipal Code or any provision of Chapter 43 of the Illinois Revised Statutes within the previous 365 days. No licensee shall be liable under this Section, unless said licensee knowingly issues a permit sticker to a person so adjudicated.

(4) **Sale prohibited**: No person issued a permit sticker under these provisions may sell or exchange for consideration of whatever kind or description, alcoholic liquor, directly, or indirectly, including, but not limited to, by means of an admission charge, cup fee or any other device.

(5) **Time period**: No permit sticker shall be valid for a period exceeding the lesser of the period of any lease of any keg or thirty (30) days from the date of issuance by the licensee.

(6) **Removal**: No person, other than a licensee, shall remove, alter, change, deface or obliterate, in any manner a permit sticker affixed to a keg.

(7) **Penalty**: Violation of this Section 18.040 shall be punishable as set forth in Section 32.002 (special penalties) of this Code.

Section 18.100 <u>Consumption of alcoholic liquors on unlicensed premises</u> --- No owner, proprietor, associate, member, or officer, agent or employee thereof, of any establishment inviting or permitting public patronage, or use by any member and guests, shall in the ordinary course of operation permit the consumption or possession of, and no person shall consume or possess alcoholic liquors on the premises, and no person shall permit alcoholic liquor to be brought into or bring into such public place or club except those specifically licensed for possession, consumption or sale of alcoholic liquor on the premises.

18.101 <u>Non-alcoholic beverage</u> --- No person shall provide nor sell at retail for consumption on the premises any non-alcoholic beverages or ice, knowing same to be intended to be mixed with or consumed with any alcoholic liquor.

18.102 <u>Restriction on licenses</u> --- Licenses shall be subject to the same restrictions as those persons or entities requiring a license to sell alcoholic beverages at retail.

18.103 **Fees** --- There shall be only one (1) classification of license and the semi-annual license fee shall be $700.00. All licenses will be signed by the Mayor and City Clerk. The semi-annual license period, under this Section, shall commence on the first day of January and the first day of July in each year. All fees must be paid in advance of the first day of each licensing period. In appropriate situations the Mayor may pro-rate the fee.

18.104 **Location** --- Licensees shall be subject to the same location requirements as those persons or entities requiring a license to sell alcoholic beverages at retail.

18.105 **Closing hours** --- No licensee shall permit liquor to be consumed on said premises between the hours of 1:00 a.m. o'clock and 6:00 a.m. o'clock. No licensee or their agent shall permit any person, other than those paid employees, to remain upon or enter the licensed premises during closing hours.

18.106 **Revocation or suspension** --- The Mayor may revoke or suspend any license issued hereunder for violation of Chapter 18 of the Code of the City of Quincy or for any violation of any state law pertaining to the sale of alcoholic liquor.

18.107 **Reporting to police** --- All licensees, their agents or employees shall immediately report to the city police any altercation that occurs on the tavern premises and shall further report to police if any patron, other than a police official is known to be in possession of a gun, knife or other deadly weapon.

18.108 **Hearing** --- If the Mayor has reason to believe there is grounds for suspension or revocation of the license of any licensee hereunder, he should hold a hearing and make a transcript of the evidence taken. Notice of hearing, setting out the alleged violation, shall be given to the licensee by registered mail at least five (5) days before the hearing. The Mayor must make his decision within ten (10) days of the hearing.

18.109 **Appeal from hearing** --- All hearings shall be subject to the administrative review act of the State of Illinois, and review or appeal may be taken in accordance with State Statutes.

18.110 **Penalty** --- Any person, firm, or other entity who violates any provision of this title shall in addition to suspension or revocation, be punishable as set forth in Chapter 32 of this Code.

18.111 **Exemption** --- Bona fide religious, charitable, labor, fraternal, educational, or veteran's organizations that operate without profit to their members shall be exempt from the provisions of this ordinance.

18.112 **Inspection** --- The issuance and/or renewal of all Class A, C and G licenses shall be contingent upon satisfactory completion of an inspection, at least annually, of the premises served under such licenses by the Quincy Fire Department to assure that such premises where alcoholic liquor is served are in compliance with the provisions of

section 21.201 (adoption of 2000 International Fire Code) of this code and the NFPA Life Safety Code.

CHAPTER 19

BUSINESS LICENSES

ARTICLE I	**AUCTIONS AND AUCTIONEERS**
ARTICLE II	**AUTO COURTS**
ARTICLE III	**PRIVATE SECURITY & FIRE ALARM SYSTEMS**
ARTICLE IV	**ELECTRICAL CONTRACTORS & ELECTRICIANS**
ARTICLE V	**FOREIGN FIRE INSURANCE COMPANIES**
ARTICLE VI	**PEDDLERS**
ARTICLE VII	**SECOND HAND STORES**
ARTICLE VIII	**SOLICITORS**
ARTICLE IX	**TAXICABS**
ARTICLE X	**MOBILE HOME PARKS**
ARTICLE XI	**HANDBILLS**
ARTICLE XII	**JUNK SHOPS OR JUNK YARDS**
ARTICLE XIII	**TRAPSHOOTING**
ARTICLE XIV	**RESERVED**
ARTICLE XV	**UNRELATED ADULT HOUSING**

ARTICLE I AUCTIONS AND AUCTIONEERS

Section 19.101 **License required** --- It shall be unlawful for any person, firm or corporation to conduct an auction in the city or to do business as an auctioneer without having first obtained a license as is herein required and paying the fee herein set forth.

19.102 **Fees** --- Auction house transient traders and transient auctioneers:

One month.....$100.00
Six months $300.00
One year $500.00

Provided, however, that auction houses dealing solely with the sale of second hand used furniture, second hand used household goods and appliances and other used second hand merchandise shall pay an annual fee of $50.00. Auctioneers for sale of animals, second hand goods and real estate the fee for one year shall be $35.00.

19.103 **Auction house** --- An auction houses hereby defined to be a house, building storeroom or place wherein goods and merchandise are sold at auction, provided that no auction house license shall be required by any merchant in closing out or winding up his business, wholly or in part at auction, if the time required therefore does not exceed sixty days, and provided further that any and all auctioneers employed by any such merchant in such behalf shall be licensed as required by this Article. Jewelry auction houses and jewelry auctions are specifically exempt from the provisions of this section, they being governed by a special ordinance.

An auctioneer regularly and in good faith employed by an auction house duly licensed under this Article shall not be required to take out a special license as an auctioneer so long as his professional activities are confined to such auction house.

19.104 **Application** --- Applications for an auctioneer's license shall be made in writing to the Clerk and shall state thereon the place of business, if any, intended to be occupied; and the names of any employees who are to be authorized to conduct auctions under the authority of the license.

19.105 **Investigations** --- The Chief of Police, or any other officer designated by the Mayor, shall investigate the character of every applicant for an auctioneer's license and no such license shall be issued to any person who is not of good character.

19.106 **Employees** --- Every person, licensed as an auctioneer, may designate not to exceed two employees who may be authorized by him to conduct auctions. Notice containing the names of employees so designated shall be given to the Clerk and an employee’s license shall be issued on the payment of a fee of $20.00. This license shall be good for one year, and it shall be unlawful for any person not licensed under this Section to conduct an auction, or for any auctioneer to permit an auction to be conducted by an unlicensed employee.

19.107 **Exemptions** --- Nothing in this Article shall apply to any public auction or sale made or conducted by a public officer by virtue of any judicial order or process or by virtue of any power

or authority contained in a mortgage or trust deed or an attorney for or legal representative of an estate in connection therewith.

19.108 **Penalty** --- Any person, firm or corporation who violates any of the provisions of this title shall, in addition to such other relief as the law may afford, be punishable as set forth in Chapter 32 of this Code.

ARTICLE II AUTO COURTS

Section 19.201 **License required** --- It sha1 be unlawful to conduct or operate an auto court in the city without having first obtained a license therefore and without complying with all of the provisions of this Article.

The term "auto court" used in this Article shall be construed to mean any parking lot or garage for the accommodation of motor vehicles where transient sleeping accommodations are afforded or provided on the same premises for the public or for the occupants of such automobiles. Provided that a hotel which furnishes parking space or has a garage in connection with the hotel shal1 not be construed as an auto court.

19.202 **Applications - plans** --- Each applicant for a license to operate or maintain an auto court shall file an application with the City Clerk and shall state thereon the name and address of the applicant, name and address of the owner or manager thereof, location of the auto court and the maximum number of persons and vehicles to be accommodated. This application shall be accompanied by plans of the auto court showing the proposed or existing locations of all buildings, toilet, bath and wash basin facilities, slop sinks, water faucets, sewer connections, driveways and other improvements.

19.203 **Building requirement** --- Each tourist cabin unit shall have a minimum enclosed floor area of one hundred fifty (150) square feet and be provided with heating facilities, a 1avatory, toilet, and tub or shower with hot and cold running water and shall be constructed in conformance with the regulations on building construction.

19.204 **Fire walls** --- No parking spaces shall be provided for motor vehicles within ten feet of any building or structure used for housing accommodations in an auto court unless the wall facing such parking space is constructed of fireproof materials and unless the windows in such wall, if any, are equipped with reinforced fire-resistant glass.

19.205 **License** --- The annual license fee for such licenses shall be fifty dollars, and the license year shall be the same as that provided for general business licenses in the city.

19.206 **Sanitary requirements** --- No such premises shall be operated as an auto court unless they are equipped with adequate toilet and other sanitary facilities to serve the total number of persons accommodated therein. All such facilities shall be properly connected with the sanitary sewer system of the city if the premises are located on a street served by such sewer.

19.207 **Regulations** --- It shall be unlawful to permit any violation of any ordinance or statute on or in any auto court; such premises must be kept clean and sanitary at all time and all waste material must be removed therefrom at least once every twenty-four hours. The Chief of Police shall inspect or cause to be inspected each auto court to see to the compliance with the provisions of this Article.

It shall be unlawful to use or permit the use of any auto court, or any portion thereof, for immoral purposes.

19.208 <u>Lights</u> --- Any area or premises of an auto court open to use by the public or by all persons staying at or being in or accommodated in such court shall be kept adequately lighted at nighttime, provided that such lights must be so shaded or otherwise regulated so as to prevent them from shining directly upon any adjacent premises.

19.209 <u>Trailers</u> --- It shall be unlawful to permit the use or to use the premises of any auto court for the accommodations of a trailer unless all ordinance requirements pertaining to trailer coach parks are complied with; provided that where a license fee for a trailer coach park has been paid, it shall not be necessary to pay an additional fee for the operation of an auto court on the same premises.

19.210 <u>Penalty</u> --- Any person, firm or corporation who violates any of the provisions of this title shall, in addition to such other relief as the law may afford, be punishable as set forth in Chapter 32 of this Code.

ARTICLE III PRIVATE SECURITY & FIRE ALARM SYSTEMS

Section 19.301 **Purpose** --- The purpose of this Article is to provide effective and efficient service to owners and lessees of private security and fire alarm systems and for the regulation and control of the sale, installation and use of such systems.

19.302 **Definitions** --- For the purpose of his Article, the following words shall have the meaning ascribed to them as follows, except as the context may otherwise require:

City: The City of Quincy, Adams County in the State of Illinois.

Person: Any person, firm or corporation.

Alarm Agent: Any person, firm or corporation that is equipped and qualified to conduct the business of operating, maintaining, installing, leasing, or selling security alarm systems and/or fire alarm systems, separately or in conjunction with each other in the city, and is equipped to monitor such systems, to receive signals from such systems, and to transmit such signals to the Police Department of the city or Fire Department of the city.

Alarm Supplier: Any person, firm or corporation that is equipped and qualified to conduct the business of operating, maintaining, installing, leasing or selling security alarm systems and/or fire alarm systems, separately or in conjunction with each other in the city.

Alarm Installer: Any person, firm or corporation granted a permit by the Chief of Police of the city and/or the Chief of the Fire Department of the city and is equipped and qualified to conduct the business of installing security alarm systems and/or fire alarm systems, separately or in conjunction with each other in the city.

Security Alarm System: Any device installed in any building or structure or on the site on which such building or structure is located, capable of transmitting a signal to the Police Department of the city or to a duly licensed alarm agent of any ongoing or attempted intrusion of such building, structure or premise without the consent of the owner.

Fire Alarm System: Any device installed in any building or structure or on the site on which such building or structure is located, capable of transmitting a signal to the Fire Department of the city or to a duly licensed alarm agent of a fire in progress in such building or structure or on such premises.

False alarm: Any signal transmitted by a security alarm system or a fire alarm system to which the Police Department of the city or the Fire Department of the city respond and find no evidence of an unauthorized or attempted intrusion or find no evidence of fire.

19.303 **Alarm Installer Permit** --- No person firm, or corporation shall act as an installer in the city without first securing a permit from the Chief of Police of the city, the Chief of the Fire Department of the city, or both. A permit for an installer of security alarm systems must be obtained from the Chief of the Police Department. A permit for an installer of fire alarm systems must be obtained from the Chief of the Fire Department.

19.304 **Application for Alarm Installer Permit** --- Any person desiring to obtain a permit to become an alarm installer within the city shall file written application with the Chief of Police of the city and/or the Chief of the Fire Department of the city as appropriate, on forms supplied by the respective chiefs. The chiefs may prescribe a combined form or conduct the investigation of any person jointly. The applications may require any information reasonably related to a person's

qualifications as an alarm installer, or any of its owners, directors, officers, employees, agents or other persons beneficially interested therein, and the criminal background of the applicant of any of its owners, directors, officers, employees, agents or other persons beneficially interested therein.

After reviewing an application for a permit, the Chief of Police and/or the Chief of the Fire Department of the city shall have fourteen (14) days to investigate the application and the background of the applicant. Thereafter, the permit shall be issued unless it is concluded that…

(1) The applicant has submitted an application which contains a misstatement or omission of any material fact; or,

(2) That some matter or activity in the background of the applicant reasonably related to the activities to be engaged in is such that a reasonable man would conclude that there would be an undue risk to the public health, safety, or welfare if the permit was granted; or,

(3) The person fails to demonstrate qualifications establishing actual or financial ability to act as an alarm installer, as the case may be; or

(4) The applicant or any owner, director, officer, employee, agent or other person beneficially interested therein has been convicted of any felony regardless of the nature of the offense or any offense regardless of whether a felony relating to the theft, stealing or burglary, within ten (10) years from the date of the application. If the permit is denied, the reasons for denial shall be set forth in writing and provided to the applicant. If eliminated or corrected, the permit may be issued or an applicant may reapply.

No fee shall be charged for making an application or the issuance of a permit.

19.305 <u>Revocation and suspension of permits</u> --- A permit granted under this Article may be suspended or revoked by the Chief of Police of the city and/or the Chief of the Fire Department of the city if either shall find that the business operations of the holder of the permit are being, or have been, conducted in violation of any state or local ordinances, that a misstatement or omission of material act has been made by the holder of the permit or the permit holder would no longer satisfy the qualifications originally required. For the purposes of this section, the holder of a permit shall be responsible for the conduct of the owners, directors, officers, employees, agents (or other persons beneficially interested therein of the permit holder. To allow enforcement of this section, a permit holder shall provide any relevant information to the respective chiefs when and as requested.

19.306 <u>Appeal</u> --- Any applicant whose application for permit has been denied, suspended or revoked by the Chief of Police of the city and/or the Chief of the Fire Department of the city may appeal such action in writing to the Mayor of the city within thirty (30) days after the date of the notice of denial, suspension or revocation. Upon receipt of the notice of appeal, the Mayor shall set the matter for hearing at least seven (7) days, but not more than twenty-five (25) days, in the future. The Clerk of the city shall thereupon give the appealing party written notice of the time and place of the hearing. At the time and place set for the hearing upon the appeal from the decision of the Chief of Police or the Chief of the Fire Department, the Mayor shall give the appealing party a reasonable opportunity to be heard in order to show cause why the prior determination should not be upheld. In cases where a permit has been denied, the burden of proof to show that the action taken was arbitrary or capricious shall be upon the appealing party. In cases where a permit has been suspended or revoked, the burden of proof shall be upon the city

to establish that appropriate grounds existed for such action. The determination of the Mayor shall be final and conclusive.

19.307 Records --- Every person acting as an alarm agent, alarm installer, and/or alarm supplier within the city shall maintain complete and accurate records of all installations of alarm systems within the city and shall furnish a copy of these records, both past and future, for the Chief of Police of the city and/or the Chief of the Fire Department of the city.

19.308 Alarm System standards --- The Chief of Police of the city and/or the Chief of the Fire Department of the city may establish regulations with the advice and consent of the City Council and may require inspection and approval of all such systems.

19.309 Maintenance of alarm devices --- Each person selling or installing a security alarm system or a fire alarm system shall have employees or agents, supplies, and equipment s located as to be able to respond to a request for repair or adjustment of any alarm system that such supplier sold, leased, or installed within four (4) hours of the request for this service. Such person shall respond within four (4) hours ofthe request.

19.310 Dial Alarm Receiving Equipment --- All currently existing dial alarms or tape dialers shall remain in service. After the effective date of this Article, no one except an alarm agent, alarm supplier, or alarm installer holding a permit from the city as required herein, shall be able to sell or install any automatic protection device known as a dial alarm or tape dialer in the city.

19.311 Alarm Agent subscriptions --- The person known as the alarm agent for the city shall, prior to leasing an alarm position to a subscriber, obtain permission from the Chief of Police of the city or the Chief of the Fire Department of the city to make such installation. The alarm agent may charge a monthly monitoring fee for each alarm position to be paid by each subscriber in an amount to be approved from time to time by the City Council.

All such connections terminating at the Police Department or the Fire Department shall be at no cost to the City of Quincy. The alarm agent shall be solely responsible for the maintenance and service of the alarm receiving equipment and shall further be responsible for any and all malfunctions of such equipment.

In the event that the city or alarm agent determines that the alarm receiving equipment located in city facilities should be changed, moved or remanded, the city shall not be responsible a for any expense incurred by the alarm agent in making such a change. The alarm agent shall, however, notify the city of the need to make such a change, move or remand at least fifteen (15) days prior to any change taking place. Any change in location made at the request of the city shall be done at city expense.

19.312 Designation of primary Alarm Agent -- The city shall select and enter into a contract with one person, the primary alarm agent, who shall be authorized to install, connect, disconnect, repair, service, and maintain all alarm receiving equipment installed in the city Police Department or the Fire Department and any alarm signal display equipment required by either department. The contract shall set forth fees which may be charged to other alarm agents or suppliers. All alarm agents, installers, suppliers installing and/or maintaining alarm systems for

alarm customers in the city to be connected to the city Police Department and/or the city Fire Department must have their systems connected to the Police Department or the Fire Department by the primary alarm agent.

19.313 Fees and charges --- All alarm device users shall be charged by the city, for all false alarms to which the Police and Fire departments respond during each twelve (12) month period commencing July 1st of each year, according to the following schedule:

Alarm	Fee
1st	$ 0
2nd	0
3rd	15.00 each
4th and subsequent alarms	30.00 each

An alarm agent and the city shall maintain a list of all false alarms of each subscriber and provide the City Treasurer with the list for billing by July 15th of each year. If not paid within thirty (30) days after billed, the subscriber shall be removed from the service by the alarm agent at the agent's expense.

19.314 Testing equipment --- No person shal1 conduct any test or demonstration of an automatic protection device or signaling device directly connected with the city Police Department or the city Fire Department without obtaining permission from them. Permission to test shall not be required when the alarm device is connected to the alarm agent and not relayed to the central station.

19.315 - 19.320 (Reserved)

19.321 Penalties --- Any person, firm or corporation who or which violates any of the provisions of this Article shall, in addition to such other remedies as the law may afford, be punishable as set forth in Chapter 32 of this Code.

ARTICLE IV ELECTRICAL CONTRACTORS

Section 19.401 Definitions --- For purposes of this Article, the following terms shall have the specific meanings prescribed herein except as the context may otherwise require:

Electrician shall mean any person who performs electrical work, as defined above, while in the employ or under contract to an electrical contractor, as defined above.

Electrical Contractor shall mean any person, firm or corporation engaged in the business of installing or altering by contract electrical equipment for the utilization of electricity for lighting, heating or power purposes. The term electrical contractors shall not include the employees employed by an electrical contractor to do or supervise the work of the electrical contractor, provided this shall not be deemed to include a sole proprietor, general partner, officer, director or shareholder otherwise required to register or apply for a certificate of registration.

Electrical work shall mean the work of installing, repairing or altering an electrical distribution system and related equipment, used to distribute, control and utilize electricity for lighting, heating or power purposes, not including distribution systems and related equipment owned by public utility companies or common carriers under the jurisdiction of the Illinois Commerce Commission for their own operations, nor radio or television equipment used for wireless transmission or reception of sound and signals.

Electrical distribution system and related equipment shall mean conductors, raceways, devices and equipment used to distribute, control and utilize electricity for lighting, heating or power purposes. It shall not include equipment which is not a component of a building or structure although electrically powered.

Forty-five hour course shall mean such course or courses administered by an accredited institution of higher learning which address the basic principals of the electrician's trade and have been approved for use in licensing of electricians hereunder by the Electrical Commission.

Maintenance, minor electrical work shall mean maintenance and repair work to present electrical distribution system, equipment and apparatus; and the repair or extension work to existing receptacles and lighting circuits not exceeding twenty (20) amps and one hundred twenty (120) volts, provided such repair or work shall not exceed three (3) receptacles, lighting outlets and switches.

Two (2) year course shall mean such course or courses administered by an accredited institution of higher learning which address the intermediate and advanced aspects of the electrician's trade and have been approved for use in the licensing of electricians hereunder by the Electrical Commission.

19.402 Electrical Contractor - registration required --- No person, firm or corporation shall engage in the business of electrical contractor without having first obtained a certificate of registration therefore as herein required. Registration shall be in the following specific categories:

(1) **Limited contractor's registration**: Limited contractor's registration will permit the holder thereof to perform work limited to branch circuit wiring only for furnaces, humidifiers, air conditioners, heat pump equipment and similar equipment rated at not more than five (5) tons cooling or thirty thousand (30,000) watts heating; and work in connection with the installation of appliances such as dishwashers, clothes washers, dryers, ovens, ranges and similar appliances in a single-family dwelling. In all events, the work performed shall be limited to single phase

voltage not exceeding two hundred forty (240) volts, phase to phase, shall not involve or require alteration or replacement of the service equipment and shall be restricted to work on load site only of service equipment.

(2) **Residential contractor's registration**: Residential contractor's registration will permit the holder thereof to perform work which may be performed pursuant to a limited contractor's registration and, additionally, all electrica1 work in single-family dwellings. Again, however, work under this registration shall be limited to systems of a maximum voltage of two hundred forty (240) volts.

(3) **Master contractor's registration**: Master contractor's registration will permit the holder thereof to perform all levels and types of electrical work including, but not limited to, those allowed pursuant to a limited contractor's registration and a residential contractor's registration.

(4) **Employee status**: All electricians licensed only as helpers shall advise the Electrical Inspector of changes in their employment status within thirty days of date of hire or date of discharge.

(5) **Contractor performing electrical work**: No contractor registered hereunder may personally perform electrical work unless that contractor has been licensed as electrician as provided under this Article.

19.403 <u>Exemptions</u> --- The following persons, firms or corporations performing electrical work within the City of Quincy shall be exempt from registration:

(1) **Owner and occupant**: The owner and the occupant of a single family dwelling shall be exempt from registration requirements if performing electrical work on the load side of service entrance equipment affecting that dwelling only. An owner and occupant must, however, be a bona fide owner thereof without present intent to sell or dispose of such single-family dwelling within one (1) year after the electrical work is performed.

(2) **Industrial operations**: Industrial or manufacturing firms performing electrical work in and/or about their facilities, provided the work is exempt from the requirements for an electrical permit as provided in Section 26.003(1) of this Code.

(3) **Public utility companies and common carriers**: Public utility companies and common carriers which are under the jurisdiction of the Illinois Commerce Commission shall be exempt from registration when performing electrical work relative to their operations as public utilities or common carriers.

19.404 <u>Procedures</u> ---

(1) **Generally**: Applications for a certificate of registration as an electrical contractor shall be made to the City Clerk. The form of application shall be as prescribed by the City Clerk, provided that the recommendations of the Building Inspector and other interested parties shall be given consideration by the City Clerk.

(2) **Applicant**:

(a) **Sole proprietorships**: In the case of sole proprietorships, the application for a certificate of registration shall be made by the sole proprietor.

(b) **Partnership**: In the case of partnerships, the application for a certificate of registration shall be made by each and every partner.

(c) **Corporations**: In the case of corporations, the application shall be made by

each and every officer, director and shareholder of the corporation who materially participate in the business. Material participation shall include, but not be limited to, performing or superintending any employees of electrical work thereof or devoting any business time to electrical work.

(d) **Employees**: In the event a person, firm or corporation cannot qualify for a certificate of registration hereunder, an employee may apply on behalf of the same. However, the employee shall be limited to employment by that employer only. An employer may not perform electrical work if such employee is no longer employed or does not participate in electrical work performed. For purposes of this subsection, an employee shall not be a part-time employee, an independent or subcontractor of the person, firm or corporation seeking a certificate of registration, nor an employee hired pursuant to a contract between such person, firm or corporation and a provider of temporary employment services.

(3) **Minimum qualifications**: The City Clerk shall not issue a certificate of registration unless the following minimum qualifications are satisfied:

(a) **Examination**: The applicant or applicants must have successfully passed an examination for the particular classification of registration applied for. The classification of registration shall be as provided in Section 19.402, that is, limited contractor's registration, residential contractor’s registration, and master contractor’s registration. The form of examination and the date, time and place thereof, shall be prescribed by the Electrical Inspector but, effective June 1, 2002, the total number of scheduled exams per applicant shall not exceed three (3) per calendar year. The Electrical Inspector shall advise the applicant or applicants and the City Clerk of the results of the examination in writing. If, on the initial attempt, the applicant fails the examination, the applicant may not schedule another examination until the expiration of thirty (30) days from the date of the first examination. If the applicant fails the examination after the second attempt, the applicant may not schedule another examination until the expiration of six (6) months from the date of the second examination. If the applicant fails the examination after a third attempt, the applicant may not therefore retake the examination until the expiration of six (6) months from the date of the third examination. An applicant may further have his or her examination reviewed by the City Council, or a committee designated by the City Council, by filing a letter with the City Clerk to that effect. The City Council shall, within thirty (30) days after the filing of such letter, either concur in the determination of the Electrical Inspector or overrule the determination and direct the issuance of a certificate of registration provided the other minimum qualifications herein set forth are complied with. The examination must be passed by all applicants. Prior to an individual acquiring an interest in an electrical contractor's business, such examination must be passed. Once an individual has passed the examination, that individual need not retake it although a certificate is issued to the individual as part of a different business or employment.

1.) **Examination - exemptions**: Persons, firms, or corporations who are registered or licensed as electrical contractors in another municipality within the State of Illinois shall be exempt from the examination required by Subsection 19.404(3)(a) above, provided such other municipality has registration requirement comparable to or as strict as those provided in this Code. The determination of whether the registration in another municipality satisfies the requirement of this subsection shall be made by the Building and Electrical Commission pursuant to Article XVII of Chapter 1l of this Code.

(b) **Liability insurance**: All applicants and, if applicable, the partnership or

corporation, after the required examination has been successfully completed but prior to issuance of the certificate of registration, shall file with the City Clerk proof of certain minimum amounts of liability insurance. The minimum amount of liability insurance shall be $100,000.00 or each occurrence of property damage and $300,000.00 for each occurrence of personal injury or bodily harm. Such policy shall provide that the City Clerk be advised if such policy is cancelled or otherwise not in effect.

(4) **Issuance of certificate**: Within ninety (90) days of successful completion of the examination required herein the applicant shall apply to the City Clerk for issuance of a certificate. Upon meeting this and the other minimum qualifications herein set forth and the application otherwise appearing in order, the City Clerk shall issue a certificate of registration to the contractor. The registration shall specifically prescribe whether the registration is a limited contractor's registration, a residential contractor's or a master contractor's registration. Certificates shall be issued in the name of the sole proprietorship, partnership or corporation and all the applicants therefore including but not limited to those applying pursuant to Subparagraph 19.404(2). If there is a change in a certificate due to a change of business ownership or otherwise, a change shall be made in the certificate by the City Clerk adding or deleting a name as appropriate.

(5) **Fees**: Effective May 1, 1992. Each applicant taking an examination shall pay an examination fee of twenty-five dollars ($25.00) each and every time the examination is taken. Upon issuance of a certificate, a registration fee shall be paid to the City Clerk in the amount of twenty dollars ($20.00) for a limited contractor's registration; thirty dollars ($30.00) for a residential contractor's registration and fifty dollars ($50.00) for a master contractor's registration. A like fee shall be paid annually thereafter on or before May 1, each year as a condition of renewal of the certificate. A fee of five dollars ($5.00) shall be paid on account of each and every name change in a certificate.

Fees: Effective May 1, 1993. Each applicant taking an examination shall pay examination fee of thirty-dollars ($30.00) each and every time the examination is taken. Upon issuance of a certificate, a registration fee shall be paid to the City Clerk in the amount of forty dollars ($40.00) for a limited contractor's registration; sixty dollars ($60.00) for a residential contractor's registration and one hundred dollars ($100.00) for a master contractor's registration. A like fee shall be paid annually thereafter on or before May 1, each year as condition of renewal of the certificate. A fee of five dollars ($5.00) shall be paid on account of each and every name change in a certificate.

(6) **Registration year**: All registrations hereunder shall expire on April 30th of each year, irrespective of the date of issuance. Any registration issued hereunder may be renewed from year to year provided the minimum qualifications established hereunder are complied with and the person, firm or corporation pays the required fee. It shall not be necessary, however, for a party to retake the examination unless the Building Inspector determines that the person, firm or corporation is no longer qualified for registration. Any such determination may be appealed as provided in Section 19.407 of this Code.

19.405 **<u>Regulations</u>** --- It shall be unlawful for any person, firm or corporation registered under the provisions of this Article to perform any electrical work without strict compliance with all applicable rules, regulations and ordinances of the city relating to such work, including, but not limited to those set forth in Chapter 26 of this Code.

19.406 <u>Revocation and suspension of certificate</u> --- In addition to such other penalties or remedies provided for herein, the Building Inspector may revoke or suspend any certificate or registration issued hereunder for violations by the holder of the certificate or registration of any of the provisions of this Article or of the regulations and prohibitions of Chapter 26 of this Code. For purposes of this Section the holder of the certificate or registration shall be responsible for the conduct of the owners, directors, officers, employees, agents or beneficial owners of the holder.

19.407 <u>Appeal</u> --- Any applicant whose application for a certificate or registration has been denied, suspended or, revoked as provided herein may appeal such denial, suspension or revocation to the Electrical Commission pursuant to Article XVI of Chapter 11 of this Code.

19.408 - 19.409 (Reserved)

19.410 <u>Penalty</u> --- Any person, firm or corporation who or which violates any of the provisions of this Article shall, in addition to such other remedies as the law may afford, be punishable as set forth in Chapter 32 of this Code.

In addition to the penalties provided in Chapter 32, any person, firm, or corporation continuing to perform electrical work contrary to any "stop-work orders" issued pursuant to Chapter 11, 19, and 26 of this Code shall be fined not less than $200.00 nor more than $1,000.00 upon conviction thereof. This provision shall not apply to work undertaken to correct or remove a violation of this Code or other unsafe condition as directed by the Electrical Inspector.

19.411 <u>Electricians: license required</u> --- No person shall be employed as an electrician by an electrical contractor or perform electrical work as defined in this Article, without having first obtained an electrician's license as herein required. The following licensing categories, and the qualifying criteria for each, are hereby established:

(1) Helper's license (Green): A helper's license shall not be issued to any person unless that person has demonstrated to the Electrical Inspector that he or she has enrolled in the next available, is actively attending, or has satisfactorily completed the forty-five (45) hour course. Workers with a helper's classification shall not perform electrical work except when accompanied and supervised by a person holding, at a minimum, a residential electrician's license. The ratio shall not exceed two (2) green card helper's license to a minimum of one (1) residential electrician's license.

(2) Limited electrician's license (Red): A limited electrician's license shall not be issued to any person unless that person has demonstrated to the Electrical Inspector that he or she has satisfactorily completed the forty-five (45) hour course or successfully passed an examination for the particular classification. In all events, the holder thereof to perform work limited to branch circuit wiring only for furnace, humidifiers, air conditioners, heat pump equipment and similar equipment rated not more than five (5) tons cooling or thirty thousand (30,000) watts heating; and work in connection with the installation of appliances such as dishwashers, clothes washers, dryers, ovens, rangers and similar appliances in a single-family dwelling. The work performed shall be limited to single phase voltage not exceeding two hundred forty (240) volts, phase to phase, shall not involve or require alteration or replacement of the service equipment

and shall be restricted to work on load site only of service equipment.

(3) Residential electrician's license (Blue): A residential electrician's license shall not be issued to any person unless that person has demonstrated to the Electrical Inspector that he or she has satisfactorily completed the forty-five (45) hour course, one (1) year of the two (2) year course and a total of two thousand (2,000) hours of on the job training.

(4) Master electrician's license (White): A master electrician's license shall not be issued to any person unless that person has demonstrated to the Electrical Inspector that he or she has satisfactorily completed the forty-five (45) hour course, two (2) year course and a total of four thousand (4,000) hours of on the job training.

19.412 <u>Procedures</u> --- All licenses shall be issued by the City Clerk upon notification by the Electrical Inspector that an applicant for licensure has satisfactorily completed the requirements contained in Section 19.411 for the issuance of an electrician's license or upon ratification by the Electrical Inspector that an exempt individual under Section. 19.413 has been property registered as an electrician under that Section.

19.413 <u>Exemptions</u> --- The educational and on the job training requirements for licensure under this Article, shall not apply to the following persons:

(1) All employees of an electrical contractor registered under this Article performing electrical work on or before the effective date of this ordinance, provided that such individuals register their names and the name of their employer with the Electrical Inspector on or before September 1, 1996.

(2) Individuals who are enrolled in, actively attending, or have satisfactorily completed, the United States Department of Labor approved National Electrical Joint Apprenticeship and Training program.

(3) An individual who can affirmatively demonstrate to the Electrical Inspector superior knowledge or expertise in electrician's trade or a level of training equivalent to or in excess of the requirements of this Article.

19.414 <u>Relation to contractor's license</u> -- No licensed electrician shall perform work at a level of expertise which exceeds the level at which his contractor or employer is licensed despite that electrician's own licensure level.

19.415 <u>Regulations and penalties</u> --- All electricians shall be subject to the regulations and penalties set forth in Section 19.405 and 19.410.

19.416 <u>Revocation and suspension of license</u> --- In addition to such other penalties or remedies as provided under this Code, the Director of Inspection may revoke or suspend for a period up to one (1) year any license issued to an electrician hereunder who violates or fails to comply with the provisions of this Article, or the regulations and provisions of Chapter 26 of this Code.

ARTICLE V FOREIGN FIRE INSURANCE COMPANIES

Section 19.501 **License required** --- It shall be unlawful for any corporation or association not incorporated under the laws of the State of Illinois to engage in effecting fire insurance in the city without fully complying with the provisions of this Article.

19.502 **Fees** --- Any such corporation or association shall pay to the Treasurer for the maintenance, use and benefit of the Fire Department a sum of money equal to 2% of the gross receipts each year received for premiums by any and all agents of any such corporation or association or received as premiums in any way for fire insurance policies on any property in the city. Such payments shall be made for the year ending the first of July a each year. All money paid to the Treasurer as provided herein shall be set apart and shall be appropriated annually by the City Council to the Foreign Fire Insurance Board of the City of Quincy Fire Department. As part of the annual municipal audit, these funds shall be audited to verify that the purchases made with appropriated monies are for the maintenance, use and benefit of the department.

19.503 **Reports** --- Every person acting as representative for or on behalf of any such company or association shall, on or before the fifteenth day of July of each year, render a full, true and just account verified by his oath, of all premiums which have been received by him on behalf of the company or association during the year ending the preceding July first on such fire insurance policies.

19.504 **Time of payments** --- All payments under the provisions of this Article shall be made on or before the fifteenth day of July following the termination of the year for which such payments are due.

ARTICLE VI PEDDLERS

Section 19.601 <u>Purpose</u> --- The City Council recognizes and declares that the business of peddling from door-to-door is a part of its government affairs and believes that it is in the best interests of the city that this business be regulated.

19.602 <u>Definition</u>--- The term "peddler" as used in this Article shall include every person, firm or corporation by whatever name who is engaged in the business of selling and delivering, or offering for sale and delivery, any goods, wares, merchandise, or commodities whatsoever, which such person carries or transports:

(1) While traveling from place to place;

(2) Stationed on or along any street alley or public place in the city; or

(3) From any pushcart, automobile or other vehicle traveling from place to place or stationed on or along any such street, alley or public place.

The term "peddler" shall include, but not be limited to, a person, firm or corporation seeking to transfer any goods, wares, merchandise or commodities in consideration of a charitable donation. The term "peddler" shall not be construed to include any person merely taking orders for the delivery of goods, wares, merchandise or commodities to be shipped in the course of interstate commerce; any person making or offering to make any sale or delivery incidental to the conduct of another business which such person is lawfully conducting; or to any person duly registered as a solicitor pursuant to Article VIII, Chapter 19 of this Code. The term "peddler" shall also not be construed to include any person, firm or corporation personally invited to a residence or business establishment by an owner or occupant thereof prior to such person, firm or corporation entering upon such premises. For this purpose, a notice as provided in Section 19.611(2) shall not be considered a personal invitation.

19.603 <u>License required</u> --- It shall be unlawful for any person, firm or corporation to engage in the business of peddler within the city without first having obtained a license therefore; provided however, that this Section shall not apply to farmers or gardeners exclusively selling the produce of their farms or gardens; to the peddling of fruit and vegetables from a basket by the person raising the same; or to the peddling of newspapers. The provisions of this Article are in addition to any other requirements established by this Code or by applicable ordinance including, but not limited to, those imposed by Article III of Chapter 30, pertaining to tag days.

19.604 <u>Application for license</u> --- Any person, firm or corporation desiring a license as a peddler hereunder shall make application therefore under oath in writing to the City Clerk. Such application shall be made upon a form provided by the City Clerk which shall include the following information:

(1) Name of applicant;

(2) Present place of residence;

(3) Business address, if other than residence;

(4) Any address of residence or business during the past three (3) years, if other than present addresses;

(5) Social Security Number or Employer Identification Number;

(6) Physical description and date of birth of applicant, if not a firm or corporation;

(7) Name and address of the person, firm or corporation by whom the applicant is employed or which the applicant represents, and the length of time of such employment or representation;

(8) Name and address of any employer or employers of the applicant during the previous three (3) years, if other than the present employer;

(9) If the applicant is a firm or corporation, the name and address of the officers, owners or managers of such firm or corporation;

(10) If the applicant is a firm or corporation, the name of each person who will act as a peddler, and as to each such person, the information described in subsections 2, 4, 5, 6, 8, 14, 15, 16 and 18;

(11) Description sufficient for identification of the goods, wares, merchandise or commodities which applicant will peddle and method of peddling;

(12) Period of time for which a license is applied;

(13) Date, or approximate date, of the latest previous application for a license under this article, if any;

(14) A statement as to whether a license issued to the applicant under this Article has ever been revoked;

(15) A statement as to whether the applicant has ever been convicted of a violation of any of the provisions of this Article, or any regulations of any other municipality or other governmental unit regulating peddling;

(16) A statement as to whether the applicant has ever been convicted of the commission of any felony under the laws of the State of Illinois, or other state or of the United States of America;

(17) A statement of the classification of license sought by applicant.

19.605 <u>Classification of peddlers</u> --- Peddlers licensed in accordance with this Article shall be of a single classification and shall be required to pay license fees in accordance with Section 19.606.

19.606 <u>License fees</u> ---

(1) **Fees**: Peddlers licensed in accordance with this Article shall pay to the City Clerk, prior to the issuance of such license, the sum of five dollars ($5.00) annual for such license. All licenses shall expire on December 31st of each year. There shall be no pro-ration for a license issued for part of a year.

(2) **Charitable peddlers**: The City Council may, in its discretion, waive in whole or in part the payment of any license fees by any peddlers for charitable purposes, provided an application for such waiver is submitted to the City Council at least forty-five (45) days prior to the commencement of any peddling. For purposes hereof, the term "charitable" means any activity represented as carried on from unselfish, civic or humanitarian motives, or for the benefit of others, and not for private gain, and may include, without limitation, patriotic, philanthropic, social service, welfare, benevolent, educational, civic, fraternal, cultural, eleemosynary, scientific, historical, athletic, or medical activities.

19.607 <u>Issuance of license</u> --- The City Clerk shall issue all licenses hereunder. When information on registration reveals violation of this type of ordinance in any city of the applicant

has been convicted of a felony, then the application must also be first approved by the Chief of Police, or his designate. The Chief of Police, or his designate, shall have full discretion on whether to issue such license, subject only to review if appealed in the same manner as upon the revocation of such license.

Any application filed shall be promptly processed and in no event more than seventy-two (72) hours after such application is filed with the City Clerk. When the applicant is found to be fully qualified, and the license fee hereunder paid, a license shall be issued by the City Clerk forthwith.

19.608 Revocation of license --- Any license issued hereunder shall be revoked by the City Clerk if the holder thereof is convicted of a violation of any of the provisions of this Article, or has made a false statement in the application, or otherwise becomes disqualified for the issuance of a license hereunder. Immediately upon such revocation, written notice thereof shall be given to the holder of the license in person, or by certified United States mail addressed to his, her or its residence or business address set forth in the application. Such license shall be null and void from the receipt of such notice if personally served or from delivery to such address if mailed. Any revocation of a license may be appealed to the Mayor by doing so in writing addressed to the Mayor within seven (7) calendar days after the effective time of such revocation. The Mayor shall promptly consider such revocation and either affirm or reverse such revocation.

19.609 Identification card --- Every person issued a license here under shall carry such license or a true copy thereof at all times, which shall also serve as an identification card. Each license shall bear a number, the peddler's name, his firm or employer, the type of merchandise to be sold, and the date of issuance of said license. When personal contact is made in door-to-door sales, said card shall be voluntarily displayed as an introduction to the proposed buyer.

19.610 Protection against contamination -- - All food and beverage dealt in by any peddler shall have adequate protection against contamination, dust, dirt, flies, vermin, dogs, cats, and other animals, and from promiscuous handling and other contamination.

19.611 Limitations on peddling ---

(1) **Policy**: It is the declared policy of the city that the occupant or occupants of the residence and business establishments in this city shall make the determination of whether peddlers shall be, or shall not be invited to their respective residences or business establishments in accordance with this Section.

(2) **Notice regulating peddlers**: The occupant or occupants of the residences or business establishments in this city may give invitation to peddlers, or the refusal of invitation to peddlers, to any residence or business establishment, by posting a sign on or near the main entrance of the residence or business establishment, at least three (3) inches by four (4) inches in size, indicating the determination of the occupant or occupants, in letters at least one-third (1/3) inch in height. Such determination may be in substantially the following form:

"ONLY PEDDLERS AND SOLICITORS REGISTERED
BY THE CITY OF QUINCY INVITED"
or
"NO PEDDLERS OR SOLICITORS INVITED"

Such notice so exhibited shall constitute sufficient notice to any peddler of the determination by the occupant or occupants of the residence or business establishment of the information contained thereon. If no notice is placed thereon, the peddler may presume he or she is invited.

(3) **Duty of peddlers**: It shall be the duty of every peddler upon going onto any premises in the city to first examine any notice provided for pursuant to Section 19.611(2), if any is attached, and be governed by the statement contained on the notice. If such notice states that no peddlers are invited, then such peddler shall immediately and peacefully depart from the premises. Any peddler who has gained entrance to any residence or business establishment, whether invited or not, shall immediately and peacefully depart from the premises when requested to do so by any occupant.

(4) **Uninvited peddlers prohibited**: It is hereby declared to be unlawful and shall constitute a nuisance for any person to go upon any premises, ring the doorbell upon or near any door, or create any sound in any other manner calculated to attract the attention of the occupant of such residence, for the purpose of securing an audience with the occupant thereof and engage in peddling, in defiance of the notice exhibited at the residence in accordance with the provisions hereof. Any peddler violating these provisions shall be deemed to have committed a trespass.

(5) **Hours**: No person shall make home solicitation between the hours of 9:00 o'clock p.m. and 9:00 o'clock a.m. unless by prior invitation.

19.612 Fraud --- Any licensed peddler who shall be guilty of any fraud, cheating or misrepresentation, whether through himself or an employee while acting as a peddler in the city, or who shall barter, sell or peddle any goods or merchandise or wares other than those specified in his, her or its application for license, shall, upon conviction, be fined as provided for in Chapter 32 of this Code.

19.613 Penalty --- Any person, firm or corporation who violates any of the provisions of this title shall, in addition to such other relief as the law may afford, be punishable as set forth in Chapter 32 of this Code.

ARTICLE VII SECOND HAND STORES

Section 19.701 Definition --- Any store, premises or vehicle of any kind or any part thereof, where used or second hand books, goods, wares or merchandise of any kind are bought, sold, offered for sale, exchanged, bartered, or kept with the intention of selling, bartering or exchanging as an essential or primary business or vocational purpose, or where the majority of transactions occurring related thereto to pre-owned merchandise including antiques, shall be for purposes of this section be deemed a "second hand" store.

19.702 License required --- No person, firm or corporation shall operate or conduct a second hand store in the city without having first obtained a license therefore or without complying with the provisions of this Article. The annual license fee for a second hand store shall be $25.00.

19.703 Application --- Application for such license shall be made to the Clerk in writing on forms provided by him and shall provide him with such additional information he deems necessary. Upon receipt of any such application, the Chief of Police shall investigate the character of the applicant and/or operator and shall report to the Mayor the result of such investigation. No license shall be issued to a person who, within the past five years, has been convicted of receiving stolen goods, possession of burglary tools, burglary, robbery, armed robbery or more than one misdemeanor reflecting upon the applicant's character trait of honesty.

19.704 Records --- It shall be the duty of each owner and/or operator to keep records of each purchase and sale. Such records shall contain the date purchased, the name and address of the seller, a brief description of the article (s), the date of sale to a purchaser, the name and address of the purchaser. The above records must be kept regardless of the consideration given or the lack thereof. These records shall be open for inspection by any duly authorized member of the Police Department at any reasonable time. (See Daily Record Form available.)

19.705 Inspection --- Any and all owners and/or operators of "second hand" stores as defined herein shall allow any member of the Police Department to inspect articles and records of any reasonable time as an incident of the privilege to operate a second hand store as herein defined.

19.706 Purchasing - from minors --- It shall be unlawful for any second hand dealer, either directly or indirectly, to purchase or receive, or by way of barter or exchange, or otherwise, any article of value, or to receive on deposit or pledge any article of value as security for a loan of money, from any minor person under eighteen (18) years of age.

19.707 Penalty --- Any person, firm or corporation who violates any of the provisions of this title shall, in addition to such other relief as the law may afford, be punishable as set forth in Chapter 32 of this Code.

ARTICLE VIII SOLICITORS

Section 19.801 Purpose --- The City Council recognizes and declares that the business of soliciting in the city is a part of its government and affairs and believes that it is in the best interests of the city that this business is regulated.

19.802 Definition--- The term "solicitor" as used in this Article shall include every person by whatever name who is engaged in the:

(1) Seeking to obtain orders for the purchase of goods, wares, merchandise, foodstuffs, or services of any kind, character or description whatever for any kind of consideration whatever;

(2) Seeking to obtain subscriptions to books, magazines, periodicals, newspapers and every other type or kind of publication; or,

(3) Seeking to obtain gifts or contributions of money, clothing or any other valuable thing for the support or benefit of any charitable or non-profit association, organization, corporation or project.

Notwithstanding anything herein to the contrary, the term "solicitor" shall not be construed to include any person, firm or corporation personally invited to a residence or business establishment by an occupant thereof prior to such person, firm or corporation entering upon such premises. For this purpose a notice as provided in Section 19.808 (2) shall not be considered a personal invitation.

19.803 Permit required --- It shall be unlawful for any person, firm or corporation to act as a solicitor within the city without first having obtained a permit therefore in accordance herewith. The provisions of this Article are in addition to any other requirements established by this Code or by applicable ordinance including, but not limited to, those imposed by Article III of Chapter 30 pertaining to tag day.

19.804 Application for permit --- Any person, firm or corporation desiring a permit hereunder as a solicitor shall make application therefore under oath in writing to the City Clerk. Such application shall be made upon a form provided by the City Clerk which shall include the following information:

(1) Name of applicant;

(2) Present place of residence;

(3) Business address, if other than residence;

(4) Any address of residence or business during the past three (3) years, if other than present addresses;

(5) Social Security Number or Employer Identification Number;

(6) Physical description and date of birth of applicant, if not a firm or corporation;

(7) Name and address of the person, firm or corporation by whom the applicant is employed or which the applicant represents and the length of time of such employment or representation;

(8) Name and address of any employer or employers of the applicant during the previous three (3) years, if other than present employer;

(9) If the applicant is a firm or corporation, the names and addresses of the officers, owners or managers of such firm or corporation;

(10) If the applicant is a firm or corporation, the name of each person who will act as a solicitor, and as to each such person, the information described in Subsections 2, 4, 5, 6, 8, 14, 15, 16 and 17;

(11) Description sufficient for identification of the subject matter of the soliciting in which the applicant will engage and the contemplated method of soliciting;

(12) Period of time for which the permit is applied for, not exceeding one (1) year;

(13) Date, or approximate date, of the latest previous application for a license under this Article, if any;

(14) A statement as to whether a permit issued to the applicant under this Article has ever been revoked;

(15) A statement as to whether the applicant has ever been convicted of a violation of any of the provisions of this Article, or any regulations of any other municipality or other governmental unit regulating soliciting;

(16) A statement as to whether the applicant has ever been convicted of the commission of any felony under the laws of the State of Illinois, or any other state or of the United States of America.

19.805 <u>Issuance of permit</u> --- The City Clerk shall issue all permits hereunder. When information on registration reveals violation of this type of ordinance in any city or the applicant has been convicted of a felony, then the application must also be first approved by the Chief of Police or his designate. The Chief of Police, or his designate, shall have full discretion on whether to issue such permit subject only to review if appealed in the same manner as upon the revocation of such permit.

Any application filed shall be promptly processed and in no event more than seventy-two (72) hours after such application is filed with the City Clerk. When the applicant is found to be fully qualified, a permit shall be issued without fee by the City Clerk not exceeding one (1) year from date of issuance.

19.806 <u>Revocation of permit</u> --- Any permit issued hereunder shall be revoked by the City Clerk if the holder thereof is convicted of a violation of any of the provisions of this article, or has made a false statement in the application, or otherwise becomes disqualified for the issuance of a permit hereunder. Immediately upon such revocation, written notice thereof shall be given to the holder of the permit in person, or by certified United States mail addressed to his, her or its residence or business address set forth in the application. Such permit shall be null and void from the receipt of such notice, if personally served or from delivery to such address if mailed. Any revocation of a permit may be appealed to the Mayor by doing so in writing addressed to the Mayor within seven (7) calendar days after the effective time of such revocation. The Mayor shall promptly consider such revocation and either affirm or reverse such revocation.

19.807 <u>Identification card</u> --- Every person issued a permit hereunder shall carry such permit or a true copy thereof at all times, which shall also serve as an identification card. Each permit shall bear a number, the solicitor's name, his firm or employer, the type of merchandise to be sold, and the date of issuance of said permit. When personal contact is made, said card shall be voluntarily displayed as an introduction to the proposed buyer.

19.808 <u>Limitations on soliciting</u> ---

(1) **Policy**: It is the declared policy of the city that the occupant or occupants of the residences or business establishments in this city shall make the determination of whether solicitors shall be, or shall not be, invited to their respective residences or business establishments in accordance with this Section.

(2) **Notice regulating solicitors**: The occupant or occupants of the residences and business establishments by this city may give invitation to solicitors, or the refusal of invitation to solicitors, to any residence or business establishment, by posting a sign on or near the main entrance of the residence or business establishment at least three (3) inches by four (4) inches in size indicating the determination of the occupant or occupants, in letters at least one-third (1/3) inch in height. Such determination may be in substantially the following form:

"ONLY PEDDLERS AND SOLICITORS REGISTERED BY THE
CITY OF QUINCY INVITED"

or

"NO PEDDLERS OR SOLICITORS INVITED"

Such notice so exhibited shall constitute sufficient notice to any solicitor of the determination by the occupant or occupants of the residence or business establishment of the information contained thereon. If no notice is placed thereon, the solicitor may presume he or she is invited.

(3) **Duty of solicitors**: It shall be the duty of every solicitor upon going onto any premises in the city to first examine any notice provided for pursuant to Section 19.808 (2), if any is attached, and be governed by the statement contained on the notice. If such notice states that no solicitors are invited, then such solicitor shall immediately and peacefully depart from the premises. Any solicitor who has gained entrance to any residence or business establishment, whether invited or not, shall immediately and peacefully depart from the premises when requested to do so by any occupant.

(4) **Uninvited solicitors prohibited**: It is hereby declared to be unlawful and shall constitute a nuisance for any person to go upon any premises, ring the doorbell upon or near any door, or create any sound in any manner calculated to attract the attention of the occupant of such residence for the purposes of securing an audience with the occupant thereof and engage in soliciting in defiance of the notice exhibited at the residence in accordance with the provisions hereof. Any solicitor violating these provisions shall be deemed to have committed a trespass.

(5) **Hours**: No person shall make home solicitation between the hours of 9:00 o'clock p.m. and 9.:00 o'clock a.m. unless by prior invitation.

19.809 <u>Penalty</u> --- Any person, firm or corporation who violates any of the provisions of this title shall, in addition to such other relief as the law may afford, be punishable as set forth in Chapter 32 of this Code.

ARTICLE IX TAXICABS AND LIMOUSINES

Division 1. Definitions

Section 19.901 **Definitions** --- For the purposes of this Article, the following terms shall have the specific meanings prescribed herein, except as the context may otherwise require:

Driver: The term "driver" shall mean and include every person in physical charge or custody of and operating any taxicab or limousine, as the case may be, for hire whether as owner, agent, employee or otherwise operated in whole or in part on the streets and public ways in the City of Quincy or on any property owned by the City of Quincy.

Limousine: The term "limousine" shall mean and include any vehicle regularly used in the business of carrying passengers for hire, having a fixed route or schedule, operated in whole or in part on the streets and public ways in the City of Quincy, or on any property owned by the City of Quincy. The term "limousine" shall not, however, mean and include any such vehicle operated by a governmental body.

Owner: The term "owner" shall mean and include every person, firm or corporation who or which has the bona fide legal title, control, direction, operation, maintenance, leasing or collection of revenues derived from any taxicab or limousine, as the case may be, operated in whole or in part on the streets and public ways in the City of Quincy or on any property owned by the City of Quincy.

Taxicab: The term "taxicab" shall mean and include any vehicle regularly used in the business of carrying passengers for hire, not having a fixed route or schedule, operated it whole or in part on the streets and public ways in the City of Quincy or on any property owned by the City of Quincy.

19.902 (Reserved)

Division 2. Taxicab Driver's License

19.903 **Taxicab driver's license required** --- No person shall drive or operate a taxicab and no owner of a taxicab shall hire or permit any person to drive or operate a taxicab on any of the streets any public ways in the City of Quincy or on any property owned by the City of Quincy, unless such person shall have secured a taxicab driver's license from the City of Quincy as provided herein.

19.904 **Taxicab driver's license application** --- A verified application for a taxicab driver's license shall be made in writing to the Chief of Police, or his designate, upon terms prescribed and provided for such purpose by the Chief of Police. Such application shall include at a minimum:

(1) **Name**: The full name of the applicant, and any alias names;

(2) **Address**: The applicant's residence address and residence addresses of the three (3) years next preceding such application;

(3) **Length of residence**: The length of residence of the applicant in the City of Quincy;

(4) **Description**: The applicant's physical, description;

(5) **Birth date**: The applicant's date and place of birth;

(6) **Citizenship**: The applicant's national citizenship;

(7) **Prior employment**: The places of applicant's previous employment for the three (3) years next preceding such application;

(8) **Prior licenses**: A statement of whether any taxicab driver's license has been previously issued to the applicant by the City of Quincy or other jurisdiction, and whether any such license has ever been revoked or suspended;

(9) **Accidents**: A statement of the date end nature of all accidents and citations involving the applicant while driving a vehicle;

(10) **Waiver**: A waiver authorizing the Chief of Police, or his designate, to investigate the applicant's background.

19.905 <u>Qualifications of taxicab drivers</u> --- No taxicab driver's license shall be issued to any person who does not meet the following minimum qualifications:

(1) **Age**: Such person must have attained the age of nineteen (19) years;

(2) **Physical and mental competence**: Such person must be physically and mentally competent to drive a taxicab, evidence of which competency shall in part be by a certificate obtained at such person's expense from a physician licensed to practice medicine in the State of Illinois, certifying that, in such physician's opinion, the person is not afflicted with any disease or infirmity which might make such person physically or mentally incapable of being a safe and satisfactory taxicab driver;

(3) **English language**: Such person must be capable of reading (speaking and writing) the English language plainly;

(4) **Good character**: Such person must be of good character evidence of which shall be in part by affidavits is of two (2) reputable persons who attest to such person's good character and who have known such person personally and observed his or her conduct frequently during at least one (1) year immediately preceding the date of such application, and an affidavit from such person's previous employer or other appropriate person if not previously employed attesting to such person's good character;

(5) **Quincy ordinances and geography**: Such person must provide evidence to the Chief of Police, or his designate, that such person has a reasonable knowledge of the regulation pertaining to taxicab drivers and the geography of the City of Quincy;

(6) **Driver's license**: Such person must be properly licensed for the purpose of driving a motor vehicle by the State of Illinois or by a state recognized by reciprocal agreement with the State of Illinois and a member of the Nonresident Violator Compact.

(7) **Traffic violations**: Such person must have no more than two (2) convictions of any offense involving a motor vehicle or any violation of a taxicab ordinance during the twelve (12) calendar months next preceding the making of the application;

(8) **Other offenses**: Such person must not have any convictions of any offense involving morals, drugs, reckless driving, driving while under the influence of intoxicating liquor or drugs, or similar violations or be on parole or probation for any such offense during the three (3) years next preceding the making of the applications;

(9) **Driving ability**: Such person must provide evidence to the Chief of Police, or his designate, that the applicant has the requisite driving ability to be a competent driver of a motor vehicle.

19.906 <u>Issuance of license</u> ---

(1) **Temporary license**: The Chief of Police, or his designate, may, but shall not be required, to issue without charge a temporary taxicab driver's license to any applicant for a taxicab driver's license pending final action on such application. Such temporary taxicab driver's license shall be valid for a period of seven (7) days and may be renewed from time to time by the Chief of Police, or his designate, for additional periods of seven (7) days each, not exceeding more than an additional twenty-one (21) days. Any temporary license may be revoked forthwith in the discretion of the Chief of Police, or his designate, and shall be automatically revoked upon final action being taken upon the driver's application.

(2) **Regular license**: Upon being notified of the approval of an applicant by the Chief of Police, or his designate, the City Clerk shall forthwith issue a taxicab driver's license to such person upon payment of the required license fee.

(3) **License year**: All taxicab drivers license (other than temporary licenses) shall expire on April 30th of each year irrespective of the date of issuance.

(4) **License fee**: The City Clerk shall charge a fee of $10.00 per year for each taxicab driver's license issued. Such fee shall not be pro-rated for a fractional part of the year.

19.907 <u>Renewal of license</u> --- Any taxicab driver's license issued hereunder may be renewed from year to year provided the driver continues to meet the minimum qualifications of taxicab drivers established hereunder and pays the required fee. A request for renewal shall be filed with the Chief of Police, or his designate, prior to renewing any taxicab driver's license. The request shall be denied unless the Chief of Police, or his designate, approves such renewal after reviewing whether the driver continues to meet the minimum qualifications of taxicab drivers established hereunder.

19.908 <u>Display and use of license</u> --- The taxicab driver's license issued hereunder shall be in the personal possession of the holder thereof at all times while serving as a taxicab driver. Such taxicab driver's license shall be worn on the front and outside of such driver's head-dress or on the front of such driver's jacket or outer garment, in plain view. No driver shall cause or permit another person to use such driver's taxicab driver's license, for any purpose whatsoever.

19.909 <u>Revocation or suspension of license</u> --- Any taxicab driver's license issued hereunder may be revoked or suspended by the Mayor for repeated violations or an extreme violation of any laws or ordinances involving a vehicle, for violating any provision of this Article, or a failure to continue to meet the minimum requirements of taxicab drivers. Prior to any such revocation or suspension, the Mayor shall provide an opportunity to the license holder to be heard unless any emergency situation exists. In emergency situations, a license may be revoked or suspended by the Mayor forthwith provided an opportunity to be heard is provided within ten (10) days following such emergency action. Any person whose taxicab driver's 1icense shall have been revoked shall return the same immediately to the City Clerk. Any person whose taxicab driver's license shall have been revoked may at any time apply for a taxicab driver's license so long as such person shall then qualify for such license.

19.910 - 19.913 (Reserved)

Division 3. Taxicab Owner's License

19.914 **<u>Taxicab owner's license required</u>** --- No person, firm or corporation shall engage in the business of operating a taxicab in whole or in part on the streets and public ways in the City of Quincy or on any property owned by the City of Quincy without first having secured a taxicab owner's license as provided herein.

19.915 **<u>Taxicab owner's license application</u>** --- A verified application for a taxicab owner's license shall be made in writing to the Chief of Police, or his designate, upon forms prescribed and provided for such purpose by the Chief of Police. Such application shall include at a minimum:

(1) **Name**: The full name of the applicant and any alias name;

(2) **Address**: The applicant's residence address, if an individual, or the applicant's principal place of business, if a firm or corporation;

(3) **Place of business**: The intended place of business;

(4) **Number of taxicabs**: The maximum number of taxicabs to be operated, the make and type of each vehicle to be used in connection with such business, the factory number of each such vehicle, the State license number of each such vehicle and the seating capacity of each such vehicle according to its trade rating;

(5) **Corporation**: If the applicant is a corporation, the applicant's state of incorporation, the domestic or foreign corporation number issued by the Office of the Illinois Secretary of State, and the names and addresses of all directors, officers and shareholders;

(6) **Firm**: If the applicant is a firm, the names and addresses of all members of participants thereof;

(7) **Felony**: If such applicant, or any director, officer or shareholder thereof in the case of a corporation, or any member or participant in the case of a firm, has ever been convicted of a felony the date of such conviction, the nature thereof and the place of such conviction.

19.916 **<u>Qualification of taxicab owners</u>** --- No taxicab owner's license shall be issued to any person, firm or corporation who or which does not meet the following minimum qualifications:

(1) **Good character**: Such person, firm or corporation must be of good character;

(2) **Felony**: Such person, firm or corporation must not have been convicted of a felony, or be on parole or probation on account of a felony, within the three (3) years immediately preceding the making of such application;

(3) **Prior revocation**: Such person, firm or corporation must not have held a taxicab owner's license in the City of Quincy or any other jurisdiction which has been revoked during the preceding six (6) months;

(4) **Corporation**: If a corporation, such corporation's directors, officers and shareholders individually meet the minimum qualifications herein established;

(5) **Firms**: If a firm, such firm's members or participants individually meet the minimum qualifications herein established;

(6) **Public convenience**: Such person, firm or corporation, after a public hearing as provided for in Section 19.917, has established and the City Council has determined that the public convenience and necessity requires or would be approximately served by the issuance of the taxicab owner's license.

19.917 <u>Public hearing</u> --- Prior to the issuance of a taxicab owner's license, there shall be held a public hearing as provided herein to consider whether the public convenience and necessity requires or would be appropriately served by the issuance of the taxicab owner's license.

(1) **Hearing by the Chief of Police**: Upon the receipt of an application for a taxicab owner's license, the Chief of Police, or his designate, is authorized, empowered and directed to hold a public hearing thereon. Notice of such hearing shall be personally delivered, or sent by certified mail, return receipt requested, to the applicant for the license and to all holders of taxicab owner's license issued hereunder at least seven (7) days prior to such hearing. Notice of such hearing shall further be published by the Chief of Police, or his designate, in a newspaper published within the city at least five (5) days prior to such hearing. The actual costs of all notices given pursuant hereto shall be paid for by the applicant.

(2) **Report to Chief of Police**: The Chief of Police, or his designate, shall in writing report his findings and conclusions after the public hearing to the City Council. Such findings and conclusions shall state, at a minimum, his findings as to the following:

(a) Whether the public is or is not at the time adequately being served by taxicabs;

(b) Whether the public convenience and necessity require the issuance of the taxicab owner's license;

(c) Whether the vehicles proposed to be used by the applicant comply with the terms of this Article;

(d) Whether such applicant satisfies the qualifications of taxicab owners established hereunder;

(e) Whether, in his opinion, such taxicab owner's license should be issued considering the financial responsibility of the applicant, the number of vehicles proposed for use, the type and kind thereof, the proposed color scheme of the taxicabs, the increase of traffic and of the demand for parking space, the safety of the streets and pedestrians, and such other relevant factors as he shall deem requisite or advisable.

(3) **Action by City Council**: The City Council shall give due consideration to the report of the Chief of Police, or his designate, and conduct such additional investigations or public hearings as it deems advisable. Based thereon, the City Council shall determine whether the public convenience and necessity require the proposed taxicab owner's license be issued and otherwise whether the license should be issued. The applicant therefore shall be promptly notified of the determination of the City Council by the Chief of Police.

19.918 <u>Issuance of license</u> ---

(1) **City Clerk to issue**: The City Clerk shall issue a taxicab owner's license if:

(a) The City Council approves the issuance of such taxicab owner's license;

(b) The applicant provides proof to the City Clerk that such applicant has obtained and filed with the Illinois Secretary of State an insurance policy issued by an insurance company licensed to do business in the State of Illinois, providing insurance coverage for each and every

taxicab owned, operated or leased by applicant with such minimums as are provided by the laws of the State of Illinois;

(c) The Chief of Police, or his designate, certifies and reports that each vehicle to be used as a taxicab complies with the provisions of this Article;

(d) The applicant has paid all required fees and costs.

(2) **Contents of license**: Each taxicab owner's license issued hereunder shall contain a distinguishing number, the name of the holder of the taxicab owner's license, the owner's residence address, the owner's business address, the number of taxicabs to be operated and an assigned number for each taxicab, the make and type of each vehicle to be used, the factory number thereof, and the state license number thereof. The number assigned hereunder to the owner and each taxicab shall in each case be the same as that assigned to the owner and such taxicab for the previous year if a previous license has been issued hereunder.

(3) **License year**: All taxicab owner's license shall expire on April 30th of each year, irrespective of the date of issuance.

(4) **License fee**: The City Clerk shall charge a fee of $10.00 per year for each taxicab owned or operated by the taxicab owner to whom or to which a taxicab owner's license has been issued hereunder. Such fee shall not be pro-rated for a fractional part of a year.

(5) **Duplicate license**: Whenever an owner has lost or destroyed a taxicab owner's license issued to such owner, or any placard or plate issued thereunder, the City Clerk upon verified application therefore may issue a duplicate license, placard or plate upon payment of a fee in the amount of $5.00 for each license, placard and or plate re-issued.

19.919 **Renewal of license** --- Any taxicab owner's license issued hereunder may be renewed from year to year provided the owner continues to meet the minimum qualifications of taxicab owners established hereunder and pays the required fee per taxicab. A public hearing shall not be required for renewal unless ordered by the City Council. A request for renewal shall be filed with the City Clerk and reviewed by the Chief of Police, or his designate, prior to renewing any taxicab owner's license. The request shall be denied unless the Chief of Police, or his designate, approves such renewal after reviewing whether the owner continues to meet the minimum qualifications of taxicab owners established hereunder.

19.920 **Amendment of license** --- A taxicab owner's license may be amended from time to time as to the individual taxicabs owned or used by the owner upon making application therefore to the Chief of Police, or his designate. The same shall be so amended prior to utilizing any taxicab not specifically listed on the taxicab owner's license. The Chief of Police, or his designate, shall certify and report to the City Clerk whether such vehicle proposed for use complies with the provisions of this Article. If the vehicle is in conformity, the City Clerk shall appropriately amend the taxicab owner's license issued upon payment of a transfer fee of $2.50. The number of taxicabs cannot, however, be so increased. The permitted maximum number of taxicabs under any license can be increased only upon making application to the City Council. The City Council may approve or deny such request after consideration thereof which consideration may include such investigations and public hearings relative to the increase as it shall deem appropriate. The City Council must act on any such request within fourteen (14) days after filing a request with the City Clerk unless waived by the taxicab owner.

19.921 <u>Display and use of license</u> ---

(1) **Display of placard**: Upon the granting of a taxicab owner's license to any owner as provided hereunder, the City Clerk shall furnish as to each taxicab owner or used by the license holder, a placard not less than five (5) inches by ten (10) inches which shall have printed thereon the name, business address and telephone number of the owner, together with the rates to be charged by such vehicle, and shall contain the individual number of the taxicab. Such placard shall be affixed in the rear of the driver's seat in the passenger compartment of the taxicab in plain view of all passengers in said vehicle to see. Such placard shall be placed only in that taxicab for which it is issued.

(2) **Display of plate**: Upon the granting of a taxicab owner's license to any owner as provided hereunder, the City Clerk shall further furnish as to each taxicab owned or used by the license holder, a plate or sticker bearing a separate number identical with the assigned number of such taxicab and the year for which the license is issued, for each and every taxicab for which the license has been procured. The applicant shall affix such plate or sticker in a place approved by the Chief of Police, or his designate, upon the rear of the taxicab. No taxicab, although licensed in accordance with the provisions of this Article, shall be used upon the streets and public way, of the City of Quincy unless such plate or sticker is attached there.

(3) **Transfer**: A taxicab owner's license issued hereunder shall be nonassignable and nontransferable.

19.922 <u>Revocation</u> --- The Mayor is hereby authorized to revoke any taxicab owner's license issued hereunder for violation of any of the provisions of this Article regulating the licensing of taxicabs, for knowingly permitting a driver of such owner's taxicab to violate any traffic laws or any provisions hereunder regulating the conduct of such drivers or a failure to continue to meet the minimum qualifications of taxicab owners. The Mayor is further hereby, authorized to suspend any taxicab owner's license as to any individual taxicab found to be in an unsafe condition or in poor state of repair, with respect to appearance, cleanliness or mechanical operation. Prior to any such revocation or suspension, the Mayor shall provide an opportunity to the license holder to be heard unless an emergency situation exists. In emergency situations, a license as to one or more taxicabs may be revoked or suspended by the Mayor forthwith, provided an opportunity to be heard is provided within ten (10) days following such emergency action. Such suspensions shall be effective until such taxicab shall be put in satisfactory condition, after inspections by the Chief of Police, or his designate, and approval by the Mayor or the City Council.

19.923 <u>Register</u> --- The City Clerk shall keep a register of the name of each taxicab owner licensed hereunder, together with the license number and description of each taxicab. The name and address of the insurance carrier or bonding company of such owner shall also be registered. Such information, together with all matters not private by nature pertaining to the application, issuance, renewal, suspension or revocation of any license issued hereunder shall be available to public inspection.

19.924 - 19.927 (Reserved)

Division 4. Limousine Licenses and Services

19.928 Generally --- No taxicab or other vehicle shall be operated as a limousine unless the driver and owner thereof are licensed in accordance herewith.

19.929 Limousine driver's license --- No person shall drive or operate a limousine and no owner of a limousine shall hire or permit any person to drive or operate a limousine on any of the streets and public ways in the City of Quincy, or on any other property, owned by the City of Quincy, unless such person shall have secured a taxicab driver's license from the City of Quincy as provided in this Article.

19.930 Limousine owner's license --- No person, firm or corporation shall engage in the business of operating a taxicab in whole or in part on any of the streets and public ways in the City of Quincy, or on any other property owned by the City of Quincy, without first having secured a limousine owner's license as provided herein. The application, qualifications, procedures (including public hearings), fees, issuance, display, renewal, revocation and other matters relative to a limousine owner's license shall be the same as those pertaining to taxicab owner's license but with reference to one or more 1imousines and one or more fixed routes or schedules. There shall, however, always be held a public hearing relative to any issuance of a limousine owner's license or amendment thereto. An application for a limousine owner's license may, but need not be, made by a holder of a taxicab owner's license or in conjunction with an application therefore.

19.931 Rates --- The provisions hereunder relative to charges for taxicab services and taxicab rates shall also apply to limousines to the extent appropriate.

19.932 Condition of limousines --- The provisions hereunder relative to the condition and equipment of taxicabs shall also apply to limousines to the extent appropriate. Other conditions may be imposed by the City Council.

19.933 Operating rules --- The provisions hereunder relative to operating rules and regulations of taxicabs shall also apply to limousines to the extent appropriate. Other rules and regulations may be imposed by the City Council.

19.934 - 19.937 (Reserved)

Division 5. Taxicab Rates

19.938 Generally --- Charges for taxicab services shall be in accordance with this division.

19.939 Establishment of rates --- Each taxicab owner shall establish a schedule of rates for taxicab services provided by the owner. The schedule shall set forth the date and hour when such schedule is effective and all charges of the taxicab owner for taxicab services including, but not necessarily limited to, charges for taxicab trips, waiting times and the conveying or carrying of baggage and parcels. In the event a zone system of rates is established, the zones shall also be set forth in the schedule, together with the charges made for services within particular zones,

between zones and beyond zones. A taxicab owner's schedule of rates may be amended from time to time.

19.940 <u>Filing of schedule</u> --- Prior to a schedule of rates going into effect, the taxicab owner establishing such schedule shall file a copy of such schedule with the Chief of Police, or his designee, and with, the City Clerk, or his deputy. Copies of the rate schedule shall also be made available by the owner for public inspection. Any amendment to the schedule of rates shall be similarly filed prior to becoming effective.

19.941 <u>Deviation from rates prohibited</u> ---- No taxicab owner shall operate and no taxicab driver shall drive a taxicab unless the fares to be charged are determined in accordance with the schedule of rates filed pursuant to section 19.940 and then in effect. No other or different fare shall be charged to passengers than is so determined. Any collection of fares varying from the rates herein prescribed shall be considered and taken as a violation of this Article by both the taxicab owner and the taxicab driver.

19.942 <u>Fare disputes</u> --- All disputes as to fares charged shall be determined by the desk officer then in charge at the Quincy Police Department.

19.943 - 19.944 (Reserved)

Division 6. Condition of Equipment of Taxicabs

19.945 <u>Inspections</u> --- Every taxicab operating pursuant to this Article shall be periodically inspected by the Chief of Police, or his designate. Such periodic inspections shall be for the purpose of determining whether such licensed taxicab is in conformity with the provisions of this Article. Each taxicab shall be so inspected at least once every three (3) months, but may be inspected more often in the discretion of the Chief of Police, or his designate. Any taxicab owner or driver shall promptly make available the taxicab sought to be inspected for such inspection and otherwise cooperate with the Chief of Police, or his designate, in any inspection performed hereunder. In the event any taxicab to be inspected hereunder is unavailable for inspection or out of-service at the time the Chief of Police, or his designate, desires to inspect the same, such taxicab shall not be further operated as a taxicab hereunder until made available and actually inspected by the Chief of Police, or his designate, provided hat such inspection shall be conducted within seven (7) days after the Chief of Police, or his designate, receives written notice that such taxicab is available for inspection. If the Chief of Police, or his designate, is not able or not qualified to make an inspection, such inspection shall be made by an appropriate party selected by the taxicab owner and approved by the Chief of Police, or his designate, at the cost of the taxicab owner. The owner of a taxicab or his agent shall be entitled to be present while any inspection is made hereunder. The owner, upon written request, shall further be entitled to a written summary of the results of such inspection.

19.946 <u>Disclaimer</u> --- The City of Quincy, or itself and its agents and employees, specifically disclaims that the City of Quincy, its agents and employees necessarily certify that taxicabs licensed hereunder are in any specific condition. Rather, such inspections are made solely for the purposes of this Article and not for reliance by the public as to the condition of such taxicabs.

Neither the City of Quincy, nor its agents and employees, shall be held liable for any damages on account of any such inspection.

19.947 General condition of taxicabs --- All taxicabs operated pursuant to this Article shall, at a minimum, satisfy the following conditions:

(1) **Licenses**: Each such taxicab shall bear current state license plates and have such safety certificates as required by state law.

(2) **Equipment**: Each such taxicab shall be equipped with proper brakes, lights, tires (including spare), horn, muffler, rear vision mirrors and windshield wipers.

(3) **Sanitary**: Each such taxicab shall be in clean and sanitary condition for the transportation of passengers.

(4) **Safe**: Each such taxicab shall be in a safe and good mechanical condition for the transportation of passengers.

(5) **Owner's name and taxicab number**: Each taxicab shall have on each side thereof, the name of the owner thereof or the owner's trade name painted in approved and visible lettering at least one (1) inch in height. Each taxicab shall be designated by a different number and such number shall also appear on each side of the taxicab. The name of the owner and the number of the taxicab shall also be painted on the rear of each taxicab in visible letters.

(6) **Color scheme**: Each taxicab shall have an exterior color scheme distinctly different from that of all other taxicabs not owned by the owner of such taxicab. The exterior color scheme for any given owner shall be the same for all taxicabs operated hereunder by such owner. Any such color scheme shall be approved by the Chief of Police, or his designate.

19.948 Display of licenses and rate schedule --- Each taxicab operated pursuant to this Article shall have conspicuously displayed a taxicab owner's placard and plate, the taxicab owners s rate schedule, or a summary thereof approved by the Chief of Police or his designee, and a duplicate of the license issued to the taxicab driver then operating the taxicab. Such license and schedule shall be displayed in a manner approved by the Chief of Police, or his designee, or in accordance with rules and regulations adopted by the Chief of Police, consistent with this Article.

19.949 - 19.953 (Reserved)

Division 7. Operating Rules and Regulations

19.954 Generally --- No taxicab shall be operated, or permitted to operate, except in accordance with the rules and regulations herein established.

19.955 Conduct of drivers --- No driver of a taxicab while on duty shall use any profane or obscene language, shout or call to prospective passengers or to disturb the peace in any way.

19.956 Issuing receipt upon demand --- Upon paying his or her fare, each passenger may demand a receipt. Upon each demand, the driver of the taxicab shall give the passenger a receipt in legible type or writing showing the date and amount so paid, the trade name of the taxicab and the name and license number of the driver.

19.957 Use of vehicle for crime --- No person, firm or corporation shall knowingly permit any taxicab to be used in the perpetration of a crime.

19.958 Alcoholic beverages --- No driver of any taxicab shall have in his possession or in or about the driver's compartment of the vehicle any alcoholic liquor. No driver of any taxicab shall use such taxicab for the purpose of transporting or delivery any alcoholic liquors except alcoholic liquors in the bona fide possession of and the property of a paying passenger. No driver of any taxicab while on duty shall drink any intoxicating liquor whether within, or without such taxicab.

19.959 Obedience to traffic rules --- Every driver of a taxicab shall obey all applicable traffic rules and regulations established by statute or ordinance.

19.960 Soliciting passengers --- No taxicab driver shall induce or attempt to make anyone employ such driver or his taxicab by any false statement or representation of the place or time of arrival or departure of any public conveyance or common carrier.

19.961 Multi-passenger trips --- No person shall be admitted to a taxicab occupied or about to be occupied by a passenger without the consent of the original passenger. Without such consent, any taxicab shall be used for only one (1) trip at a time be there one (1) or more passengers on such trip.

19.962 Direct route --- The taxicab driver shall take his or her passenger to his or her destination by the most direct available route from the place where the passenger enters the taxicab.

19.963 Duty to accept passengers --- The driver of a taxicab shall accept as a passenger any person who seeks to so use the taxicab, provided such person is not intoxicated and conducts himself in an orderly manner.

19.964 Occupancy by person not a passenger --- No owner or driver of a taxicab shall permit any person except a passenger for hire to occupy or be seated in such taxicab when the taxicab is either parked or traveling to the destination of the passenger.

19.965 Number of passengers and seating arrangement --- No driver shall admit or transport in his or her taxicab more than five (5) passengers at any time or permit any passenger to ride in the front seat of the taxicab unless there are three (3) or more passengers in the rear seat of the taxicab. Where such taxicab is equipped with two (2) additional folding seats in the rear thereof, no driver shall admit or transport in his or her taxicab more than seven (7) passengers at any time or permit any passenger to ride in the front seat unless there are five (5) or more passengers in the rear seats of the taxicab. Notwithstanding anything herein to the contrary, a passenger may ride in the front seat if necessitated by mental or physical disability of such passenger.

19.966 Quincy Municipal Airport --- No taxicab driver shall, and no taxicab owner shall cause or permit any taxicab driver to solicit or seek any passenger for taxicab services at Quincy Municipal Airport, except as specifically permitted herein. Notwithstanding anything herein to

the contrary, a taxicab driver may respond to a bona fide call for taxicab services made to the driver or the manner of the taxicab while such taxicab is not on the premises of the Quincy Municipal Airport. Notwithstanding anything herein to the contrary, a taxicab driver may further respond to an unsolicited request for taxicab services if at the Quincy Municipal Airport after having just previously transported a bona fide passenger for hire to such destination. In no event shall a taxicab occupy any parking spaces established for limousines at the Quincy Municipal Airport.

19.967 Master log --- Every taxicab owner shall maintain a daily master log upon which are recorded all trips made each day, showing time and place of origin and destination of each trip and amount of fare. The forms for the master log shall be furnished by the owner and shall be in a form approved by the Chief of Police, or his designate. Every owner shall retain and preserve master logs for twelve (12) months. The master logs shall be available for inspection by the Quincy Police Department.

19.968 - 19.972 (Reserved)

Division 8. Conduct of Passengers

19.973 Failure to pay fare prohibited --- No passenger shall fail or refuse to pay the lawful fare charged at the termination of a trip.

19.974 Disorderly conduct --- No passenger shall do any act in or about a taxicab in such an unreasonable manner as to alarm or disturb another and to provoke a breach of the peace.

19.975 - 19.978 (Reserved)

19.979 Penalty --- Any person, firm or corporation who violates any of the provisions of this title shall, in addition to such other relief as the law may afford, be punishable as set forth in Chapter 32 of this Code.

ARTICLE X MOBILE HOME PARKS

Section 19.1001 <u>Definitions</u> --- As used it this Article, the following terms shall have the meaning indicated below:

(1) **Mobile Home**: "Mobile Home" shall mean a detached single-family dwelling unit with all of the following characteristics:

(a) Designed for long term occupancy and containing sleeping accommodations, a flush toilet, a tub or shower or both, and kitchen facilities, with plumbing and electrical connections provided for attachment to outside systems.

(b) Designed to be transported after fabrication on its own wheels, or other detachable trailer or detachable cable wheels.

(c) Arriving at the site where it is to be occupied as a dwelling ready for occupancy except for minor and incidental unpacking and assembly operations, location on foundation supports, connection to utilities, and the like.

(2) **Enforcing Officer**: The Building Inspector of the City of Quincy shall serve as the enforcing officer under this ordinance.

(3) **Mobile Home Park**: "Mobile Home Park" shall mean and include an area of land on which two or more occupied mobile homes are situated, either free of charge or for revenue, together with any building, structure or enclosure used as part of the equipment of such park.

(4) **Mobile Home Stand**: "Mobile Home Stand" shall mean that part of an individual mobile home lot which has been reserved for the placement of the mobile home, and which is covered by the mobile home.

19.1002 <u>License required for Mobile Home Park</u> --- It shall be unlawful for any person, partnership, corporation or other entity to construct or operate a mobile home park within the corporate limits of the City of Quincy, or within a mile and one-half radius of the corporate limits of the City of Quincy without first obtaining from the City of Quincy a license to construct or a license to operate a mobile home park.

19.1003 <u>Plan</u> ---

(l) **Generally**: Each application for a license under this Article shall be accompanied by a plat or sketch showing the size and location of all buildings and structures.

(2) **Additional plans for flood hazard areas**: Such additional plans shall be provided as part of the application as may be required by Article VII (Development in Special Flood Hazard Areas) of Chapter 23 (Buildings, Construction and Development Regulations) of this Code.

19.1004 <u>Application procedure</u> --- In order to obtain a permit to construct, or an original license to operate a mobile home park, the applicant shall file with the enforcing officer a written application setting forth:

(1) The full name and address of the applicant or applicants, or names and addresses of the partners if the applicant is a partnership, or the names and addresses of the officers if the applicant is a corporation, and the present or last occupation of the applicant at the time of the filing of the application.

(2) The location and legal description of the tract of land upon which it proposes to operate and maintain the mobile home park.

(3) The proposed and existing facilities in the mobile home park for water supply, sewage, garbage and waste disposal, fire protection and for a community building which will include a description of toilets urinals, sinks, wash basins, slop sinks, showers, drains and laundry facilities, the proposed alterations therein and the maintenance thereof.

(4) The proposed method of lighting the structures and land upon which the mobile home park is to be located.

(5) The site plans of the mobile home park, the plans and specifications for new buildings and facilities, all as may be required by the rules and regulations of the city under the provisions of this ordinance.

(6) A statement of the fire fighting facilities, public or private, which are available to the mobile home park.

An affidavit of the applicant as to the truth of the matters contained in the application shall be attached thereto. Where a permit to construct is sought in addition to a license to operate, request therefore shall be made in the same application.

Each application shall be accompanied by an application fee in the amount of $10.00 for each one acre of land or fraction thereof proposed to be used as a mobile home park. Each application fee shall be paid to the city by a separate certified check of U.S. money order in the amount of the application fee and such fee once paid to the city shall not be refunded.

Upon receipt of an application for a permit to construct a mobile home park, or in an application for a license to operate and maintain the same, the enforcing officer shall, if the park is, or the proposed park will be, in conformity with this ordinance and the rules and regulations adopted by the enforcing officer pursuant thereto, issue a permit to construct or an original license, as the case may be. If the application for a permit to construct or an original license is declined, the enforcing officer shall give the reasons therefore in writing to the applicant; and if the objection can be corrected, the applicant may amend his application and re-submit it for approval.

If a permit to construct a mobile home park has been issued, the applicant upon completion thereof shall notify the enforcing officer. The enforcing officer shall then inspect the mobile home park and if completed in accordance with the accepted application, the enforcing officer shall then issue a license.

No change in any sanitary facilities, methods of water supply, sewer drainage, garbage or waste disposal, and no change in the plot plan shall be made without first making a written permit therefore. Such application shall be made in the way and manner hereinbefore set forth; such change or changes shall comply with such safety and sanitary code, codes, rules and regulations as are applicable a thereto.

Such permit does not relieve the applicant from securing building permits or from complying with any other ordinances applicable thereto. In addition to the application fee provided or herein, the licensee shall pay to the City Clerk on or before May 1st of each year an annual license fee which shall be $50.00 per year.

Each license fee shall be paid to the city by a separate certified check or U.S. money order in the amount of the license fee only and any license fee or any part thereof, once paid to and accepted by the city shall not be refunded.

Any license granted hereunder shall be subject to revocation or suspension by the city. However, the enforcing officer shall first serve or cause to be served upon the licensee a written notice on which shall be specified the way or ways in which such licensee has failed to comply

with the ordinance or any rules or regulations promulgated by the city pertaining thereto. Said notice shall require the licensee to remove or abate such nuisance, unsanitary or objectionable condition specified in such notice within five days or within a longer period of time as may be allowed by the enforcing officer. If the licensee fails to comply with the terms and conditions of said notice, within the time specified or such extended period of time, the enforcing officer may revoke or suspend such license.

No person, firm or corporation shall construct a mobile home park without first obtaining a permit to do so. All permits to construct, all licenses to operate, and all permits to make alterations therein shall be prominently displayed in the office of the mobile home park. Licenses issued under this ordinance shall be transferable only upon written consent of the licensor, provided, however, that the licensor may not withhold such consent where the provisions of this ordinance have been complied with in all other respects.

Each mobile home park licensed or to be constructed under the provisions of this ordinance shall provide a responsible attendant, caretaker or agent at all times, whose duty it small be to maintain the park, its facilities and equipment in a clean, orderly and sanitary condition.

19.1005 Minimum area --- The minimum area for each mobile home park shall be ten (10) acres. The minimum number of spaces completed and ready for occupancy before first occupancy is, permitted shall be ten (10) spaces.

19.1006 Maximum density of units per acre --- The total density of any mobile home park shall not exceed seven (7) mobile homes per gross acre and the net density on any particular acre within such park shall not exceed ten (10) mobile homes per net acre.

19.1007 Minimum lot size --- The minimum lot area for an individual mobile home shall be 3,300 square feet. A mobile home and its appurtenant structure may not occupy more than thirty per cent (30%) of the individual mobile home lot.

19.1008 Mobile home stand --- All mobile homes which are not situated on foundations or piers shall be located on mobile home stand which shall conform to the following standards:

(1) **Size**: The size of the mobile home stand shall be at least equal to the length and width of the mobile home and its appurtenant structures located thereon.

(2) **Location**: The location of each mobile home stand shall be at such elevation and angle in relation to the access street and the mobile home accessway that placement and removal of the mobile home is practical. More specifically, the minimum elevation above the adjoining private or public street or streets shall be (6) inches.

(3) **Construction**: Appropriate material, properly graded, placed and compacted so as to be durable and adequate for the support of the maximum anticipated loads during all season, and protected against the action of frost and freezing.

(4) **Gradient**: There shall be a minimum of two (2) per cent longitudinal and adequate crown or cross-gradient for surface drainage.

(5) **Base enclosure**: All mobile homes which are placed on foundations or piers shall have the entire perimeter enclosed.

19.1009 <u>Minimum width of mobile home lots</u> --- The minimum width of each individual mobile home lot shall be forty (40) feet as measured from one side lot line along a line perpendicular to said side lot line, to the opposite side lot line. Said measurement shall be made at the front set back line as established herein.

19.1010 <u>Minimum distance between mobile homes</u> - No mobile home shall be placed within fifteen (15) feet of another mobile home, and in no case shall the mobile home be located closer than seven and one-half (7-1/2) feet of the side or rear lot lines excepting a carport.

19.1011 <u>Yards abutting common areas</u> --- The distance from that part of a mobile home closest to a common private: access drive, a common parking area, a common sidewalk or other common area to said common private access drive, a common parking area, common sidewalk or other common area shall be fifteen (15) feet minimum.

19.1012 <u>Yards abutting mobile home park boundary or public street</u> -- No mobile home shall be located a lesser distance from the mobile home park boundary than the side yard width required in the zoning district in which the mobile home park is located. In which no case shall the mobile home be located less than fifteen (15) feet from the mobile home park boundary. The distance from that part of a mobile home closest to a public street shall be twenty-five (25) feet minimum.

19.1013 <u>Yards on intersecting streets</u> --- On mobile home lots fronting intersecting streets, whether one or both of said streets are public or private, the set-back lines required herein must be provided on both streets.

19.1014 <u>Markers, patios and storage for mobile home lots</u> ---

(1) **Storage**: There shall be posted and maintained in a conspicuous place on each lot a number corresponding to the number of each lot as shown on the plat plan submitted as required in Section C so that each lot may be easily identified.

(2) **Patio**: Each mobile home lot may provide an appropriate outdoor living space to supplement the interior space of a mobile home.

(a) **Construction**:

1.) Any subgrading shall be well drained, uniformly graded and compacted.

2.) Construction shall provide a useful outdoor surface constructed or formed either monolithically or in movable units with weather resistant materials placed sufficiently close together to create a paved area.

(3) **Tenant storage**: Storage facilities may be provided on or conveniently near each mobile home lot (1) for the active storage of outdoor equipment, furniture or tools, (2) for the inactive storage of such other materials as is used only seasonally or infrequently by the typical tenant and cannot be conveniently stored in the typical mobile home.

(a) **Size**: There shall be a minimum of ninety (90) cubic feet provided for general storage for each mobile home lot.

(b) **Design and location of storage facilities**: Storage facilities shall be provided on the lot, or in compounds located within a reasonable distance, not more than five hundred

(500) feet from each stand located not closer to private streets and public streets than the mobile home unit itself. Storage facilities shall be designed in a manner that will enhance the appearance of the court and shall be constructed of suitable weather resistant materials appropriate under the uses and maintenance contemplated.

19.1015 <u>Streets and walks</u> ---

(1) **Public streets**: All publicly dedicated streets shall conform to the requirements of the subdivision regulations of the city.

(2) **Private streets**: Where private streets are provided within the mobile home park the minimum private street on which an individual mobile home lot fronts shall be thirty (30) feet in width, and shall be located approximately in the center of a parcel of property equal to the width of right-of-way for a local residential street fifty (50) feet. All streets shall be constructed in accordance with the requirements of the subdivision regulations of the city. This shall not apply at the time of the passage of this ordinance. Private streets in such existing mobile home parks shall be not less than twenty (20) feet in width and shall be installed in accordance with the subdivision regulations of the city. All private streets shall be unobstructed access to a public street or highway. All future private and public streets constructed in connection with a mobile home park shall be designed and laid out in accordance with the subdivision regulations of the city.

(3) **One-way streets**: One-way streets may be provided in a mobile home park provided the one-way street serves less than twenty (20) lots and provided no parking is allowed on the one-way street. One-way streets must be fourteen (14) feet minimum width.

(4) **Walks**:

(a) Walks shall be provided for safe, convenient, all-season-pedestrian access of adequate width for intended use, durable and convenient to maintain. There shall be:

1.) Individual walks to each mobile home stand from a paved street or from a paved driveway or parking space connecting to a paved street.

2.) Common walks shall be provided to service facilities.

(b) Walks shall be constructed of approved material in accordance with specifications made by the city for the various types now in use or approved at a later date and shall be generally at least three (3) feet in width. Sudden changes in alignment and gradient shall be avoided. Required walks are not to be used as drainage ways. Additional sidewalks may be provided in other areas as determined by the owners.

(5) **Parking spaces**: Parking spaces shall be provided for not less than one and one-half (1-1/2) cars per mobile home lot. Required car parking spaces may include one (1) car space on each mobile home lot and in addition shall include a sufficient number of car spaces in conveniently located parkway bays to bring the total number of parking spaces up to the required one and one-half (1-1/2) car spaces per mobile home lot. Each parking space shall not be less than nine (9) feet wide and twenty (20) feet deep, shall be surfaced for its entire area with durable, hard material, suitable for all weather use.

19.1016 <u>Water supply</u> --- An adequate supply of potable water shall be furnished from a public water supply system or from a private water system conforming to all applicable laws, regulations, resolutions and ordinances with supply connection located on each mobile home lot.

19.1017 <u>Sewers and sewage</u> --- In each mobile a home park all waste or waste water (including such waste or waste water from mobile homes) from a faucet, toilet, or tub, shower, sink, slop sink drain, washing machine, garbage disposal unit, or laundry shall empty into an approved sewer system installed in accordance with city specifications or in accordance with other applicable codes, ordinances, statutes if located outside of the corporate limits of the City of Quincy. Surface water shall not be discharged into a public sanitary sewer.

19.1018 <u>Service building</u> --- Each mobile home park may provide service buildings to house such toilet, bathing or other sanitation facilities and such laundry facilities as are hereinafter more particularly prescribed.

(1) All service buildings shall be permanent structures complying with all applicable laws and ordinances regulating the construction of buildings.

(2) All service buildings shall be adequately lighted at all times of the day and night, shall be constructed of such moisture proof material, including painted woodwork, as shall permit repeat cleaning and washing and shall be maintained at a temperature of not less than sixty eight (68) degrees Fahrenheit during the period from September 1st to May 15th. Floors of all service buildings shall be of water-impervious material, shall contain a drain or drains and shall be so constructed as to assure efficient drainage to such drain and drains.

(3) All service buildings and the grounds of the park shall be maintained in a clean condition and kept free of any condition that will menace the health of any occupant or the public or constitute a nuisance or fire hazard.

19.1019 <u>Laundry facilities</u> --- When laundry facilities are provided, all facilities shall conform to the following standards:

(1) Hot and cold water outlets shall equal not less than the number of laundry trays and washing machines.

(2) An ample number of electrical outlets shall be provided supplying current sufficient to operate each such machine.

(3) The laundry facilities shall be in a separate service building or, if in the same building where sanitation facilities are housed, shall be separate from the area housing sanitation facilities by a soundproof wall.

19.1020 <u>Garbage and trash disposal</u> --- Corrosion resistive metal garbage cans or other non-combustible containers, with tight fitting covers shall be provided in quantities adequate to permit disposal of all garbage and rubbish. Each mobile home lot shall have at least one (1) garbage can within one hundred (100) feet of it. The cans shall be kept in sanitary condition as determined by inspection of the health inspector. Garbage and rubbish shall be collected and disposed of as frequently as may be necessary but not less than weekly to insure that the garbage cans shall not overflow.

19.1021 <u>Electric lighting and outlets</u> --- All entrances, exits and driveways shall be lighted at night. Not less than a one hundred (100) watt electric light shall be provided for each two hundred (200) lineal feet of private street and at each entrance and exit to the mobile home park. At least one (1) receptacle outlet for each mobile home space

shall be provided; this receptacle and other electric wiring shall conform to the requirements of the electric code of the city. Street lighting on public streets shall conform to the requirements in the subdivision regulations and electric code of the city.

19.1022 **Storage tanks** --- Individual storage facilities that comply with the fire code regulations for gasoline, oil, gas, liquified petroleum or other fuels shall be permitted within the trailer park.

19.1023 **Playgrounds** --- The size of the recreational area shall not be less than eight (8) percent of the gross site area devoted to recreational facilities, generally provided in a central location, including suitable landscaping, fencing and benches. In larger courts, decentralization will be allowed. Recreation areas shall include space for community buildings and community use facilities, such as adult recreation, child playgrounds and natural open space.

19.1024 **Additions to mobile homes** --- No permanent or semi-permanent structure shall be affixed to any mobile home as an addition to such mobile home, nor shall any accessory structure be permitted on any mobile home lot or in any mobile home park except those accessory structures required by this Chapter and those structures designed for the use with a mobile home such as a canopy, carport or awning, or any expansion unit or accessory structure specifically manufactured for mobile homes. If an office structure is provided, its construction shall comply with all applicable laws and ordinances.

19.1025 **Permitted obstructions** --- For the purpose of this ordinance, no obstructions will be permitted on mobile come lots except the following obstructions will be permitted when located in the yards indicated:

(1) **In any yard**: Chimneys, overhanging roof eaves, open terraces and awnings adjoining the mobile home; and ornamental light standards and flagpoles, fences, trees and shrubs, except that on corner lots, fences, trees and shrubs shall not be higher than thirty (30) inches above the centerline grade of the intersecting streets if located in that portion of a required front or side yard situated within twenty (20) feet of the lot corner formed by the intersection of any two street lines.

(2) **In front yards**: No other obstructions shall be permitted.

(3) **In side yards**: Open accessory off-street parking spaces, except in a side yard abutting a street.

(4) **In rear yards**: Private garages or carports, if attached or structurally a part of the mobile home, open accessory off-street parking spaces, accessory sheds, tool rooms, or other similar accessory buildings; private swimming pools in accordance with regulations of the city. Accessory buildings or structures may occupy not more than thirty (30) percent of a rear yard.

19.1026 **Screening** --- Planting shall be hardy, appropriate for use and location, and planted so as to thrive with normal maintenance. There shall be provided planting adequate to screen views effectively. Views to be screened shall include laundry drying yards, garbage and trash collection stations.

19.1027 <u>Certificate of use occupancy required</u> --- No mobile home park shall be occupied until a certificate of use and occupancy shall have been issued by the enforcing officer to the effect that the mobile home park or the portion thereof for which such certificate is requested is in compliance with all applicable provisions of this ordinance.

Every mobile home occupied as a dwelling unit located in the city after the date of adoption of this ordinance shall meet the minimum standards for plumbing, heating, and electrical systems as defined by the American Standards Association Project All 9.1 approved March 12, 1963 as revised periodically. Mobile homes that display the official seal and register number of the Mobile Home Manufacturers Association and the Trailer Coach Association will be considered to comply with the American Standards Association Standard All 9.1. Mobile homes that do not meet with these minimum standards for plumbing, heating and electrical systems will not be issued a certificate of use and occupancy permit by the Building Inspector.

The minimum standards for plumbing, heating and electrical systems as defined by the American Standards Association Project All 9.1 (1963), as amended and revised periodically, are here by made a part of and incorporated by reference into this ordinance.

19.1028 <u>Penalty</u> --- Any person, firm or corporation who violates any of the provisions of this title shall, in addition to such other relief as the law may afford, be punishable as set forth in Chapter 32 of this Code.

ARTICLE XI HANDBILLS

Section 19.1101 <u>Handbills and samples</u> --- It shall be unlawful to distribute indiscriminately to the public any cards, circulars, handbills, samples of merchandise, or any advertising matter whatsoever on any public street or sidewalk or other public place in the city; provided however, that this paragraph shall not be construed to prohibit the peddling or sale of any article or publication that may carry or be accompanied by advertising matter where a charge is made or a price paid for such article or publication.

19.1102 <u>House to house distribution</u> --- It shall be unlawful to distribute indiscriminately to the public, by leaving at stores, offices or houses or residences in the city, any cards, circulars, handbills, samples of merchandise, or any advertising matter whatsoever without having first secured a permit therefore; provided however, that this paragraph shall not be construed to apply to the sale of articles by licensed peddlers or solicitors.

19.1103 <u>License - application</u> --- Applications for such licenses shall be made to the City Clerk, and shall contain a statement of the nature of the article, cards or advertisement to be distributed and the name of the applicant and the name of the manufacturer, or distributor of such article or service advertised.

The fee for such licenses shall be two dollars per day. No such license shall be issued to any but a person of good character. The Chief of Police shall make or cause to be made an investigation into the character of each applicant and shall report the results thereof to the Mayor before any such license is issued. All licenses shall be signed by the Mayor and attested by the City Clerk.

19.1104 <u>Penalty</u> --- Any person, firm or corporation who violates any of the provisions of this title shall, in addition to such other relief as the law may afford, be punishable as set forth in Chapter 32 of this Code.

ARTICLE XII JUNK YARDS

Section 19.1201 The term "junk", as used in this ordinance, shall be held to mean and include scrap and old iron, steel, chain, brass, copper, magnesium, aluminum, tin, lead or other base metals, scrap lumber, old rope, old bags, rags, waste paper, paper clippings, scraps of woolens, clips, bagging, rubber and glass, and empty bottles of different kinds and sizes when the number of each kind or size is less than one gross and wrecked or dilapidated motor vehicle, engine or machinery received, stored or held for more than ninety days, and all articles and things discarded or no longer used as a manufactured article composed of or consisting of any one or more of the materials or articles herein mentioned.

The term "junk dealer", as used in this ordinance, shall be held to mean and include every person, firm, partnership or corporation that shall engage in the business of buying, selling, bartering, or exchanging, or that shall collect, receive, store or hold in possession for sale, barter or exchange any of the things in and by this section defined as junk.

The term "junk yard", as used in this ordinance, shall be held to mean and include the premises on which a junk dealer is engaged in the business of buying, selling, bartering, exchanging, or collecting, receiving, storing or holding in possession for sale, barter or exchange, any of the things in and by this section defined as junk.

19.1202 The minimum physical requirements at all times for each junk yard shall be as follows:

(1) The premises where the junk yard is located shall not have more than two entrances thereto and two exits therefrom, each of which shall not exceed fifteen feet in width at the perimeter of the premises.

(2) The premises where the junk yard is located shall be enclosed on its perimeter with a solid, non-transparent, vertical wall or fence of a minimum height of seven feet measured from ground level excepting for the entrances and exits permitted by Subsection (1) of Section 2 hereof.

(3) The aforesaid solid, non-transparent wall or fence and the gates or doors, if any, at the aforesaid entrances and exits shall not contain any sign, poster or advertising matter of any kind whatsoever excepting one sign of the licensee thereon not exceeding ten square feet in size.

(4) The public streets and alleys adjacent to the junk yard shall not have junk thereon.

19.1203 It shall be unlawful for any person, firm, partnership or corporation to keep, maintain, conduct or operate a junk yard within the corporate limits of the City of Quincy, Illinois without first obtaining a license so to do as herein provided. A separate license shall be secured for each junk yard located on non-contiguous lots, blocks, tracts or parcels of land.

19.1204 Before any license under the provisions of this ordinance is issued, any person, firm, partnership or corporation desiring to operate a junk yard in this city shall first make a verified application in writing to the City Clerk stating thereon the full name of the applicant, his residence address, the trade name of the applicant, the legal description of the premises where the junk yard is to be located, the size and approximate location of each entrance thereto and exit therefrom, whether or not the premises where the junk yard is to be located is enclosed on its perimeter with a solid, non-transparent wall or fence of a minimum height of seven feet measured from ground level excepting the entrances and exits, and whether or not the public

streets and alleys adjacent to the premises where the junk yard is to be located has junk thereon. If the applicant is a firm or partnership, the names and residence addresses of all the partners, and in case of a corporation the names and residence addresses of the president and secretary shall be stated in the application.

19.1205 Any applicant for a license to keep, maintain, conduct or operate a junk yard shall be disqualified for any of the following reasons:

(1) Not a person of good character.

(2) Falsification of an application for license hereunder.

(3) License for a junk yard theretofore issued to the applicant has been revoked during the preceding twenty-four months.

(4) Failure to meet any one of the minimum physical requirements for a junk yard as specified in Section 2 hereof.

19.1206 Any and all licenses issued hereunder shall state that such license is issued in the name of the junk dealer solely for the purpose of keeping, maintaining, conducting and operating a junk yard, the expiration date thereof, the legal description of the premises where the junk yard is to be located, that such license shall be used and the privileges thereof exercised only at the described premises, and that such license is non-assignable and non-transferable.

Such license shall further provide that it is issued subject to all the provisions of this ordinance; that upon the first conviction for a violation of any of the provisions of this ordinance, in addition to the fine, such junk yard shall remain closed for a period of thirty days; that upon the second conviction for a violation of any of the provisions of this ordinance such license shall become null and void, and the licensee shall forfeit all sums paid for such license, and that the licensee by the acceptance of such license expressly agrees to all the terms and conditions thereof and to the terms and provisions of this ordinance, and all amendments thereof.

19.1207 The annual license fee for each junkyard shall be one hundred dollars ($100.00) payable in advance with the filing of the application for license, and shall not be subject to pro-rate reduction far a portion of the year, either because of application for or because of revocation of a license; provided, however, that only one said annual license fee shall be payable for licenses which may be issued whenever the applicant desires to keep, maintain, conduct or operate junk yards on lots, block, tract or parcels of land which are situated on directly opposite sides of and abut upon each side of a public street or alley. All licenses shall expire on the 30th day of April of each year.

19.1208 No licensee hereunder shall purchase or receive any article whatsoever from any minor without the written consent of their parents or guardians.

19.1209 Any licensee hereunder shall at all times allow any police officer or patrolman of said city and the public health authorities free access to any and all portions of the junk yard for the purpose of inspection.

19.1210 The Mayor of the City of Quincy, Illinois may revoke the license of any licensee hereunder for violating, failing or refusing to comply with any provisions of this Article.

19.1211 **<u>Penalty</u>** --- Any person, firm or corporation who violates any of the provisions of this title shall, in addition to such other relief as the law may afford, be punishable as set forth in Chapter 32 of this Code.

ARTICLE XIII TRAPSHOOTING

Section 19.1301 **License required** --- Any adult organization in the city may supervise or sponsor a trapshoot. An annual license fee of $25.00 per year shall be required. The City Clerk shall issue the license upon written application of the organization requesting the trapshoot, which application shall state the name of the organization, the purpose for which the organization has been formed and reasons for requesting a license for a trapshoot. Applications for such licenses must be referred to the Chief of Police, and, upon his approval, the Clerk shall issue the license. The minimum fee shall be $25.00 per annum, regardless of the number of trapshoots to be held by the organization. A license may be renewed without the approval of the Chief of Police; provided however, that no substantial complaints have been received by the Clerk or City Council concerning the trapshoot or trapshoots, sponsored by the organization applying for such renewal.

ARTICLE XV UNRELATED ADULT HOUSING

Section 19.1501 <u>Definitions</u> --- It shall be unlawful for any person to own or operate unrelated adult housing within the city limits of the City of Quincy without first having obtained a license. Unrelated adult housing consists of one or more dwelling units located on one property, as defined by the boundaries of a subdivided lot or categorized as a single property on the tax rolls of the Adams County Treasurer's Office, which are used for the purpose of housing three or more unrelated adults longer than fourteen consecutive days and having common areas that are used by such unrelated adults including, but not limited to, kitchens, living, bathing and bedroom areas and not having private secured entrances to individual dwelling units. Hotels, motels, motor lodges, bed and breakfast operations, nursing homes, shelter care homes, group homes, dependent care facilities licensed or operated by the State of Illinois and student housing on properties owned and operated by accredited institutes of higher education are not unrelated adult housing for the purposes of this Article.

19.1502 <u>Occupancy limitations and application requirements</u> --- A licensee may not house any more than one unrelated adult per two hundred (200) square feet of habitable living space at any given time and no more than six (6) unrelated adults may reside in a single dwelling. "Habitable living space" means space in a structure for living, sleeping, eating or cooking. Bathrooms, toilet compartments, closets, halls, storage or utility spaces and similar areas are not considered habitable living spaces. Each dwelling shall provide, at a minimum, one full bathroom, with toilet and bathing facilities. A second full bathroom must be provided if more than four (4) unrelated adults occupy a single dwelling. In all other respects, each unrelated adult housing dwelling shall comply with the occupancy limitations set forth in Section PM-405.0 of the BOCA National Property Maintenance Code (1993), which is incorporated herein and made a part of this Article. Each license applicant shall submit to the Superintendent of Inspection a plat or floor plan of the unrelated adult housing property, which, at a minimum, shall provide the following information:

(1) A floor plan of the dwelling unit or units illustrating the bedrooms, kitchen, bathroom and living areas;

(2) A site plan of the property illustrating off street parking for the tenants; and

(3) A copy of the applicant's proposed base agreement which, in addition to such other lease provisions as the landlord may deem appropriate, shall include provisions prohibiting the unlawful sale or possession of alcoholic beverages and controlled substances, peace disturbance, disorderly and indecent conduct and the maintaining of a private or public nuisance on the premises.

19.1503 <u>Fees and issuance of license</u> --- The annual fee for an unrelated adult housing license shall be $50.00 regardless of whether the unrelated adult housing will be operated for the whole or any part of a year and shall be paid at the office of the City Clerk, who shall issue all licenses applied for and approved hereunder, commencing January 1st of each year. A separate license shall be required for each unrelated adult housing property as defined in Section 19.1501.

CHAPTER 20

TRAFFIC AND VEHICLES

ARTICLE I DEFINITIONS AND GENERAL PROVISIONS

ARTICLE II PEDESTRIANS

ARTICLE III RULES OF THE ROAD

ARTICLE IV CONDITION OF VEHICLES

ARTICLE V PARKING RULES

ARTICLE VI UPTOWN PARKING

ARTICLE VII BICYCLES

ARTICLE VIII DRIVERS

ARTICLE IX AMBULANCES

ARTICLE X ABANDONED AND DERELICT VEHICLES

ARTICLE XI PENALTY

ARTICLE I DEFINITIONS AND GENERAL PROVISIONS

Section 20.101 <u>Definitions</u> --- Whenever in this Article the following terms are used, they shall have the meanings respectively ascribed to them in this Section.

Alley: A highway of less than 24' total width used primarily for delivery service.

Bicycle: Every device propelled by human power upon which any person may ride, having two tandem wheels either of which is more than twenty (20) inches in diameter.

Business district: The closely built-up business portion of the city.

Crosswalk: That portion of the roadway included within the prolongation of the sidewalk lines at street intersections.

Driver: Any person who is in actual physical control of a vehicle.

Emergency vehicle: Vehicles of the Police or Fire Department; ambulances; any vehicle conveying a city official or employee in response to an emergency official call.

Explosives: Any chemical compound or mechanical mixture that is commonly used or intended for the purpose of producing an explosion and which contains any oxidizing and combustive bits or other ingredients in such proportions, quantities, or packing that an ignition by fire, by friction, by concussion, by percussion, or by detonator of any part of the compound or mixture may cause such a sudden generation of highly heated gases that the resultant gaseous pressures are capable of producing destructible effects on contiguous objects or of destroying life or limb.

Farm tractor: Every motor vehicle designed and used primarily as a farm implement for drawing plows, mowing machines, and other implements of husbandry.

Flammable liquid: Any liquid which has a flash point of seventy degrees F. or less, as determined by a tabliabue or equivalent closed cup device.

Improved highway: A roadway of concrete brick, asphalt, macadam or gravel.

Intersection: The area embraced within the prolongation of the property lines of two or more streets which join at an angle, whether or not such streets cross.

Laned highway: A street, the roadway of which is divided into three or more clearly marked lanes for vehicular traffic.

Loading zone: The space adjacent to a curb reserved for the exclusive use of vehicles during the loading or unloading of passengers or materials.

Motorcycles: Every motor vehicle having a saddle for the use of the rider and designed to travel on not more than three wheels in contact with the ground, but excluding a tractor.

Park: To stand a vehicle whether occupied or not, for a period of time greater than is reasonably necessary for the actual loading or unloading of persons.

Pedestrian: Any person afoot.

Pneumatic tire: Every tire in which compressed air is designed to support the load.

Property line: The line marking the boundary between any street and the lots or property abutting thereon.

Public building: A building used by the city, or by any park district, school district, the State of Illinois or by the United States Government.

Right-of-way: The privilege of the immediate use of the roadway.

Road tractor: Every motor vehicle designed and used for drawing other vehicles and not so constructed as to carry any load thereon either independently or any part of the weight of vehicle or load so drawn.

Roadway: That portion of a street designed or ordinarily used for vehicular traffic.

Safety zone: That portion of a roadway reserved for the exclusive use of pedestrians, suitably marked or elevated.

School bus: Every motor vehicle owned by a public or governmental agency and operated for the transportation of children to or from school or privately owned and operated for compensation for the transportation of children to or from school, or any school activity.

Semi-trailer: Every vehicle without motive power designed for carrying persons or property and for being drawn by a motor vehicle and so constructed that some part of its weight and that of its load rest upon or is carried by another vehicle.

Sidewalk: That portion of a street between the curb line or roadway and the adjacent property line designated for pedestrian use.

Solid tire: Every tire of rubber or other resilient material which does not depend upon compressed air for the support of the load.

Street: Every way set aside for public travel except footpaths.

Traffic: Vehicles, streetcars, pedestrians and draft or herded animals using any street for travel.

Trailer: Every vehicle without motive power designed for carrying passengers or property and for being drawn by a motor vehicle and so constructed that no part of its weight rests upon the towing vehicle.

Truck tractor: Every motor vehicle designed and used primarily for drawing other vehicles and not so constructed as to carry a load other than a part of the weight of the vehicle and load so drawn.

Urban district: The territory contiguous to and including any street which is built up with structures devoted to business, industry or dwelling houses situated at intervals of less than one hundred feet for a distance of a quarter mile or more.

Vehicle: Every device in, upon or by which any person or property is or may be transported or drawn upon a highway, including bicycles but not including perambulators or toy vehicles.

Yield right-of-way: When required by a official sign means the act of granting the privilege of the immediate use of the intersecting roadway to traffic within the intersection roadway to traffic within the intersection and to vehicles approaching from the right or left.

20.102 <u>Obedience to police</u> --- Members of the Police Department are hereby authorized to direct all traffic in accordance with the provisions of this Article, or in emergencies as public safety or convenience may require, and it shall be unlawful for any person to fail or refuse to comply with any lawful order, signal or direction of a policeman. Except in case of emergency, it shall be unlawful for any person not authorized by law to direct or attempt to direct traffic.

20.103 <u>Scene of fire</u> --- The Fire Department officer in command, or any fireman designated by him, may exercise the powers and authority of a policeman in directing traffic at the scene of any fire or where the Fire department has responded to any emergency call for so long as Fire Department equipment is on the scene, in the absence of or in assisting the police.

20.104 <u>Signs and signals</u> --- It shall be unlawful for the driver of any vehicle to disobey the instructions of any traffic sign or signal placed in view by the authority of the City Council or in

accordance with the laws of the State of Illinois excepting on direction of a policeman. All signs established by direction of the governing body shall conform to the state standards for traffic signs.

20.105 <u>Light signals</u> --- Whenever traffic is regulated by the type of signal commonly known as a stop and go signal or traffic control signal the following colors shall indicate the following:

Red or stop requires that the traffic faced by this color shall stop and remain standing.

Green: vehicular traffic facing the signal may proceed straight through or turn right or left unless a sign in such place prohibits either such turn. But vehicular traffic shall yield the right-of-way to other vehicles and to pedestrians lawfully within the intersection or an adjacent crosswalk at the time such signal is exhibited.

Amber or yellow or caution indicates preparation for a change in direction of traffic movement.

When a red lens is illuminated by rapid intermittent flashes drivers of vehicles shall stop before entering the intersection.

When a yellow lens is illuminated with rapid intermittent flashes, drivers of vehicles may proceed into the intersection only with extra caution.

The driver of any vehicles shall be permitted to turn right on a red light as provided by state statute except as to the following intersections where a right turn at a red light is specifically prohibited:

Intersection of Sixth and Maine Streets, all four approaches;
Intersection of Twenty-fourth and State Streets, the west approach only;
Intersection of Thirty-sixth and Maine Streets when approaching from the south only.

20.106 <u>Unauthorized signs - interference with signs</u> --- It shall be unlawful for any person to place, maintain or display any device, other than an official warning or direction sign or signal authorized by statute or ordinance, upon or in view of any street, if such device purports to be or is in imitation of, an official warning or direction sign or signal, or directs or purports to direct the movement of traffic. Any such unauthorized device is hereby declared to be a nuisance, and may be removed by any policeman.

It shall be unlawful for any person having control of the property to permit any sign, fence, plants or other objects on premises adjacent to a street in such manner as to obstruct the view and endanger traffic.

It shall be unlawful for any person to deface, injure, move or interfere with any official traffic sign or signal.

20.107 <u>Animals or bicycles</u> --- Every person riding a bicycle or an animal, or driving any animal drawing a vehicle upon any street shall be subject to the provisions of this Article applicable to the driver of the vehicle, except those provisions which can have no application to one riding a bicycle or driving or riding an animal. Provided, that except in business districts, bicycles may be ridden on sidewalks.

20.108 <u>Exemptions</u> --- Subject to the provisions of Article X, the provisions of this Chapter regulating the movement or parking of vehicles shall not apply to emergency vehicles while the

driver thereof is engaged in the performance of emergency duties. Nor shall such provisions apply to persons actually engaged in repairing or otherwise improving the street under authority of the City Council or the State of Illinois.

20.109 <u>Contracts extending jurisdiction to private property</u> ---

(1) **Authority**: By contract with school boards, community college boards, educational institutions, hospitals, churches, shopping centers or malls, apartment complex owners, not-for-profit corporations, and other owners of private property within the limits of the city, the city may be and is empowered to regulate and enforce laws, ordinances, rules and regulations pertaining to the parking of automobiles or motor vehicles, the traffic at parking areas and, in general, traffic and vehicles, on or at such private property. Such contracts may be entered into pursuant to Sections 11-209 or 11-209.1 of the Illinois Motor Vehicle Code (I11. Rev Stat., ch. 95 1/2, par. 11-209), Sections 6 (pertaining to home rule) and 10 (pertaining to intergovernment cooperation) of Article VII (Local Government) of the Constitution of Illinois, or any other applicable or successor provisions of law.

(2) **Effect of contract**: No contract entered into extending jurisdiction to private property shall be construed to:

(a) Obligate or require the city to enforce laws, ordinances, rules or regulations;

(b) Remove or alter any rights, powers, duties or obligations of the property owner; or,

(c) Limit or construct existing authority of the city on private property.

(3) **Interpretation of ordinances**:

(a) **In general**: Where the city has extended its jurisdiction on or at private property, the laws, ordinances, rules and regulations pertaining to the parking of automobiles or motor vehicles, the traffic at parking areas and, in general, traffic and vehicles, shall be appropriately construed or interpreted to apply to private property to the same effect and purposes as if such private property is or was public property, streets, right-of-way, lanes or areas.

(b) **Examples**: Without limiting the scope or intent of this section:

1.) Provisions that may be enforced on private property include, but are not limited to, the provisions of Chapter 20 (Traffic and Vehicles) of this Code.

2.) Private signs, markings or designations shall be deemed and considered official signs, markings or designations.

3.) Alleys, crosswalks, fire lanes, intersections, loading zones, rights-of-way, roadways, sidewalks or streets shall be deemed and considered as if public notwithstanding its location on private property.

4.) Fire lanes shall be and include any area so indicated by the private owner and posted with signs, markings or designations.

5.) Curbs located within private property shall be deemed public curbs.

6.) The private property shall be considered a public ground, place or building, provided this shall not be deemed to allow access or use of the private property or any part thereof other than as or in excess of that permitted by the property owner.

ARTICLE II PEDESTRIANS

Section 20.201 Right-of-way --- It shall be unlawful for the driver of any vehicle to drive into any crosswalk without the exercise of due and proper care in view of the special use made thereof by pedestrians.

It shall be unlawful to drive any vehicle into any crosswalk while there is in such crosswalk upon the half of the roadway upon which such vehicle is traveling any pedestrian engaged in crossing the roadway until such pedestrian shall have passed beyond the path of such vehicle, when the pedestrian shall indicate his intention to cross.

The driver of a vehicle shall stop before entering upon any crosswalk when any other vehicle proceeding in the same direction is stopped at such crosswalk for the purpose of permitting a pedestrian to cross.

20.202 Pedestrians using roadway --- At no place shall a pedestrian cross any roadway other than by the most direct route to the opposite curbing, and when crossing at any place other than a crosswalk he shall yield the right-of-way to all vehicles upon the roadway.

No person shall stand or loiter in any roadway other than in a safety zone, if such act interferes with the lawful movement of traffic.

It shall be unlawful for any person to stand in a roadway for the purpose of soliciting a ride from the driver of any vehicle.

20.203 Signals --- At intersections where traffic is directed by a policeman or by a stop and go signal, it shall be unlawful for any pedestrian to cross the roadway other than with released traffic, if such crossing interferes with the lawful movements of traffic.

20.204 Standing on sidewalk --- It shall be unlawful for a pedestrian to stand upon any sidewalk except as near as is reasonably possible to the building line or curb line, if such standing interferes with the use of the said sidewalk by other pedestrians.

20.205 Prohibited crossing ---Between adjacent, intersections at which traffic control signals are in operation, pedestrians shall not cross at any place except in a crosswalk.

20.206 Pedestrians walking along roadways --

(1) Where sidewalks are provided it shall be unlawful for any pedestrian to walk along and upon an adjacent roadway.

(2) Where sidewalks are not provided any pedestrian walking along and upon a highway shall when practicable walk only on the left side of the roadway or its shoulder facing traffic and upon meeting a vehicle shall step off to the left.

(3) No person shall stand in a roadway for the purpose of soliciting a ride from the driver of a vehicle.

20.207 Blind pedestrians - right-of-way -- Any blind person who is carrying in a raised or extended position a cane or walking stick which is white in color or white tipped with red, or who is being guided by a dog, shall have the right-of-way in crossing ,any street or highway, whether or not traffic on such street or highway is controlled by traffic signals, anything in this

Article to the contrary notwithstanding. The driver of every vehicle approaching the place where a blind person, so carrying such a cane or walking stick or being so guided, is crossing a street or highway shall bring his vehicle to a full stop and before proceeding shall take such precaution as may be necessary to avoid injury to the blind person. The provisions of this Section shall not apply to a blind person who is not so carrying such a cane or walking stick or who is not guided by a dog, but the other provisions of this Article relating to pedestrians shall then be applicable to such persons. However, the failure of a blind person to so use or carry such a cane or walking stick or to be guided by a guide dog, when walking on streets, highways or sidewalks shall not be considered evidence of contributory negligence.

ARTICLE III RULES OF THE ROAD

Section 20.301 **<u>Required position and method of turning</u>** --- The driver of a vehicle intending to turn at an intersection or into any drive shall do so as follows:

(1) The approach for a right turn shall be made as close, as practical, to the right hand curb or edge of the roadway.

(2) Where traffic is permitted to move in both directions on any roadway, an approach for a left turn shall be made in that portion of the right half of the roadway nearest the center line thereof, and where such left turn is made at an intersection, by passing to the right of the center line where it enters the intersection and after entering the intersection, the left turn shall be made so as to turn left across the center line of the roadway being entered.

(3) Where traffic is restricted to one direction on the roadway, the driver of a vehicle intending to turn left shall approach the intersection in the extreme left hand lane lawfully available to traffic moving in the direction of travel of such vehicle.

The driver of a vehicle about to enter or cross a street or highway from a private road or driveway shall yield the right-of-way to all vehicles approaching on said street or highway.

20.302 **<u>Turning on crest of hill</u>** --- No vehicle shall be turned so as to proceed in the opposite direction upon any curve, or upon the approach to, or near the crest of a grade, where such vehicle cannot be seen by the driver of any other such vehicle approaching either direction within 500'.

20.303 **<u>Starting parked vehicles</u>** --- No person shall start a vehicle, which is stopped, standing, or parked unless and until such movement can be made with reasonable safety.

20.304 **<u>Driver's signal</u>** ---

(1) No driver of a vehicle shall suddenly start, slow down, stop or attempt to turn without first giving a suitable signal in such manner as to apprise others who might be affected by his action.

(2) No person shall turn a vehicle from a direct course upon a highway unless and until such movement can be made with reasonable safety and then only after giving a clearly audible signal by sounding the horn if any pedestrian may be affected by such movement or after giving an appropriate signal in the manner hereinafter provided in the event any other vehicle may be affected by such movement.

(3) A signal of intention to turn right or left shall be given during not less than the last 100 feet traveled by the vehicle before turning.

(4) The signals herein required shall be given either by means of the hand and arm or by a signal lamp or signal device, but when a vehicle is so constructed or loaded that a hand and arm signal would not be visible both to the front and rear of such vehicle then said signals must be given by such a lamp or device.

20.305 **<u>Hand signals</u>** --- All signals hereon required to be given by hand or arm shall be given from the left side of the vehicle in the following manner and such signals shall indicate as follows:

(1) **Left turn**: Hand and arm extended horizontally.

(2) **Right turn**: Hand and arm extended upward.
(3) **Stop or decrease speed**: Hand and arm extended downward.

20.306 <u>Vehicles not to be driven on sidewalks or in safety zones</u> --- No driver of a vehicle shall drive within any sidewalk area except at a permanent or temporary driveway, nor at any time into or upon any portion of a roadway marked as a safety zone.

20.307 <u>Right-of-way</u> --- When two vehicles approach or enter an intersection from different roadways at approximately the same time, the driver of the vehicle on the left must yield the right-of-way to the vehicle on the right.

20.308 <u>Starting parked vehicles</u> --- No person shall start a vehicle which is stopped unless such movement is made with reasonable safety.

20.309 <u>Vehicle turning left</u> --- The driver of a vehicle intending to turn to the left within an intersection or into an alley, private road or driveway shall yield the right-of-way to any vehicle approaching from the opposite direction which is so close as to constitute an immediate hazard, but said driver having so yielded may proceed at such time as a safe interval occurs.

20.310 <u>Limitations on turning around</u> --- It shall be unlawful for the operator of any vehicle to turn such vehicle so as to proceed in the opposite direction unless such movement can be made in safety and without backing into traffic or in otherwise interfering with traffic.

20.311 <u>Turns</u> --- It shall be unlawful:

(1) To make a right or left hand turn into any one-way street so as to proceed against the movement of traffic thereon.

(2) To make a complete, or "U", turn in any street or in any intersection in the district bounded by the west line of Fourth Street, the east line of Eighth Street, the north line of Broadway, and the south line of Jersey Street, nor shall any vehicle make a complete turn at any corner where there is a stop and go signal in operation, or where four way stop signs are located, or at any portion of a street other than at an intersection, nor shall any vehicle make a complete turn at the following intersections: Third and Maine Streets; Lindell, Shirlen, and Crestview Drive.

(3) To make a left hand turn at the intersection of Third and York Street when approaching on Third from the south only.

20.312 <u>Driving on right side of roadway</u> --- Upon all roadways of sufficient width a vehicle shall be driven upon the right half of the roadway except as follows:

(1) When overtaking and passing another vehicle proceeding in the same direction under the rules governing such movement;

(2) When the right half of a roadway is closed to traffic while under construction or repair;

(3) Upon any roadway divided into three marked lanes for traffic under the rules applicable thereon;

(4) Upon roadway designated and sign posted for one-way traffic;

(5) Whenever there is a single track paved road on the public highway and two vehicles meet thereon, the driver on whose right is the wider shall give the right-of-way on such pavement to the other vehicle.

20.313 <u>Passing vehicles</u> --- Drivers of vehicles proceeding in opposite directions, except as provided above, shall pass each other to the right and upon roadway having width for not more than one line of traffic in each direction each driver shall give to the other at least one-half of the main traveled portion of the roadway as nearly as possible.

20.314 <u>Overtaking vehicles</u> --- The following rules shall govern the overtaking and passing of vehicles proceeding in the same direction, subject to those limitations, exceptions, and special rules hereinafter stated:

(1) The driver of a vehicle overtaking another vehicle proceeding in the same direction shall pass to the left thereof at a safe distance and shall not again drive to the right side of the roadway until safely clear of the overtaken vehicle.

(2) Except when overtaking and passing on the right is permitted, the driver of an overtaken vehicle shall give way to the right in favor of the overtaking vehicle on audible signal and shall not increase the speed of his vehicle until completely passed by the overtaking vehicle.

20.315 <u>Overtaking vehicles on the right</u> ---

(1) The driver of a vehicle may overtake and pass upon the right of another vehicle which is making or about to make a left turn.

(2) The driver of a vehicle may overtake and, allowing sufficient clearance, pass another vehicle proceeding in the same direction either upon the left or upon the right of a roadway with unobstructed pavement of sufficient width for four or more lanes of moving traffic when such movement can be made safely. No person shall drive off the pavement or upon the shoulder of the roadway in overtaking or passing on the right.

20.316 <u>Limitations on overtaking on the left</u> ---

(1) No vehicle shall be driven on the left side of the center of the roadway in overtaking and passing another vehicle proceeding in the same direction unless such left side is clearly visible and is free of oncoming traffic for a sufficient distance ahead to permit such overtaking and passing to be completely made without interfering with the safe operation of any vehicle approaching from the opposite direction of any vehicle overtaken. In every event the overtaking vehicle must return to the right hand side of the roadway before coming within 100’ of any vehicle approaching from the opposite direction.

(2) No vehicle shall, in overtaking and passing another vehicle or at any other time, be driven on the left side of the roadway under the following conditions:

(a) When approaching the crest of a grade or upon a curve in the highway.

(b) When approaching within 100' of any bridge, viaduct or tunnel or when approaching within 100' of or traversing any intersection or railroad grade crossing.

(c) Where official signs are in place directing that traffic keep to the right, or a distinctive line is marked which distinctive line also so directs traffic as declared in the Manual of Uniform Traffic Control Devices adopted by the Illinois Department of Transportation.

20.317 <u>Driving on roadways laned for traffic</u> --- Whenever any roadway has been divided into two or more clearly marked lanes for traffic, the following rules in addition to all others consistent herewith shall apply:

(1) Any vehicle shall be driven as nearly as practical entirely within a single lane and shall not be moved from such lane until the driver has first ascertained that such movement can be made with safety.

(2) Upon a roadway which is divided into three lanes a vehicle shall not be driven in the center lane except when overtaking and passing another vehicle where the roadway is clearly visible and such center lane is clear of traffic within a safe distance, or in preparation for a left turn or where such center lane is at the time allocated exclusively to traffic moving in the direction the vehicle is proceeding and is sign posted to give notice of such allocation.

(3) Official signs may be erected directing slow-moving traffic to use a designated lane or allocating specified lanes to traffic moving in the same direction and drivers of vehicles shall obey the direction of every such sign.

20.318 <u>Operation of vehicles on the approach of authorized emergency vehicles</u> ---

(1) Upon the immediate approach of an authorized emergency vehicle, when the driver is giving audible signal by siren, exhaust whistle, or bell, the driver of every other vehicle shall yield the right-of-way and shall immediately drive to a position parallel to, and as close as possible to, the right-hand edge or curb of the highway clear of any intersection and shall stop and remain in such position until the authorized emergency vehicle has passed, except when otherwise directed by a police officer.

(2) This Section shall not operate to relieve the driver of an authorized emergency vehicle from the duty to drive with due regard for the safety of all persons using the highways.

20.319 <u>Improper driving</u> --- It shall be unlawful to operate any vehicle in the city in an improper manner so as to endanger life or property.

20.320 <u>Speed restrictions</u> --- It shall be unlawful to drive any motor vehicle on any street in the city at a speed in excess of thirty (30) miles per hour, or in alleys at a speed in excess of fifteen (15) miles per hour.

Provided that if the City Council, by ordinance, sets other limits as provided by statute after an engineering or traffic survey, or by home rule ordinance, then such limits shall govern the rate of speed on the streets indicated in such ordinances. The Superintendent of Street and Bridge shall post appropriate signs showing such speed limits.

Provided further that the speed of all vehicles, of the second division, as defined by statute, having two or more solid tires shall not exceed ten (10) miles per hour.

The fact that the speed of a vehicle is lower than the foregoing limits shall not relieve the driver from the duty to decrease speed when approaching and crossing an intersection, when approaching and going around a curve, when approaching a hill crest, when traveling upon any narrow or winding roadway or when special hazards exist with respect to pedestrians, and speed shall be decreased as may be necessary to avoid colliding with any person or vehicle, or on entering the highway in compliance with legal requirements and the duty of all persons to use due care.

20.320.1 It shall be unlawful to drive any motor vehicle on any street hereinafter designated at a speed in excess of twenty (20) miles per hour during school days when school children are present:

Jefferson Street from midway between Nineteenth and Twentieth to midway between Twenty-first and Twenty-second

Eighth Street from midway between Harrison and VanBuren to midway between Adams and Monroe.

Eighth Street from midway between Payson and Ohio to midway between Payson and Washington.

Fourth Street from midway between Broadway and Spring to midway between Oak and College.

Maine from Twelfth Street to midway between Fourteenth and Fifteenth.

Twelfth Street from Maine to midway between Jersey and York.

Maine Street from Twenty-fourth to Park Plaza.

Eighth Street from midway between Maple and Locust to midway between Spruce and Sycamore.

Eighteenth Street from midway between Elm and College to midway between Spring and Oak.

Jefferson Street from midway between Fifteenth and Sixteenth to midway between Seventeenth and Eighteenth.

Tenth Street from midway between Cherry and Cedar to midway between Spruce and Sycamore.

Thirtieth Street from Lind to Chestnut.

Lindell Avenue from Thirtieth to North Branch.

Chestnut Street from Nineteenth to Twenty-third.

State Street from midway between Eighth and Ninth to midway between Ninth and Tenth.

Twelfth Street from midway between Cherry and Cedar to midway between Sycamore and Spruce.

Third Street from midway between Broadway and Spring to midway between Oak and College.

Jefferson Street from midway between Eighth and Ninth to midway between Ninth and Tenth.

Maine Street between a point 200' west of Thirtieth Street and a point 100’ east of the east property line of Baldwin School.

Thirtieth Street between a point 200' north of Maine Street and a point 100' south of the south property line of Baldwin School.

Columbus Road between a point 200' west of the marked crosswalk and a point 100' east of the easternmost property line of St. Dominic School.

Twenty-fifth Street between Hampshire and Maine.

(a) It shall be unlawful to drive any motor vehicle other than a school bus or emergency vehicle on Fourteenth Street between Maine and Jersey on school days from 2:40 p.m. to 2:55 p.m. The aforesaid block may be barricaded by school authorities at both Maine and Jersey on Fourteenth Street to insure compliance with this ordinance. The responsibility for the proper placement and removal of barricades shall be the duty of the aforesaid school authorities.

(b) It shall be unlawful to drive any motor vehicle other than a school bus or emergency vehicle on the following streets or alley on school days from 11:30 a.m. to 12:45 p.m.:

From a point 60’ west of Seventeenth Street to Eighteenth Street on College Ave.

Between Sixteenth Street and Seventeenth Street in the east/west alley north of College Avenue.

Between Seventeenth Street and Eighteenth Street in the east/west alley south of College Avenue.

The aforesaid block may be barricaded by school authorities at the entrances of said streets and alleys to insure compliance with this ordinance. The responsibility for the proper placement and removal of barricades shall be the duty of the aforesaid school authorities.

(c) It shall be unlawful to park any motor vehicle other than a school bus or emergency vehicle on the east side of Twentieth Street between Washington and Jefferson on school days from 2:45 p.m. to 3:15 p.m. The aforesaid block may be barricaded by school authorities at both Washington and Jefferson at Twentieth Street to insure compliance with this ordinance. The responsibility for the proper placement and removal of barricades shall be the duty of the aforesaid school authorities.

(d) Barricades shall be erected on Seventh Street by St. Mary's School between Adams Street and the alley to the north; and also the alley between Monroe and Adams. Seventh to Eighth Streets, from 10:30 a.m. to 10:45 a.m., and 12:35 p.m. and 1:05 p.m.

(e) Barricades shall be erected on Spruce Street between Tenth and Eleventh Street by St. John's School and also the alley between Cedar and Spruce from 11:45 a.m. to 12:40 p.m. on days school is in regular session and between 11:30 a.m. and 12:25 p.m. on early dismissal school days or on early lunch schedules of the school.

(f) Barricades shall be erected for the partial closing of the alley behind Irving School.

1.) At the east end of the ally the gate opening shall have a width of 12’;

2.) The west end of the alley the gate opening shall remain at its present width;

3.) The alley is closed only during the hours that Irving School is in session.

20.320.2 Superintendent of Street and Bridge shall post appropriate signs showing such speed limit within the areas above designated.

20.320.3 The above designated areas are declared to be school areas within the meaning of Section 50.05 of the Uniform Act Regulating Traffic on Highways in the State of Illinois.

20.320.4 It shall be unlawful to drive any motor vehicle on Sixth Street north of Locust Street, in the 1300 block of North Eleventh Street, on Wilmar Drive, or on any street in Southern View, Granview Acres, Edgewood, Ridgewood, and Wilderness Trails subdivisions of the City of Quincy at a speed in excess of twenty (20) miles per hour.

20.320.5 It shall be unlawful to drive any motor vehicle in the KOA campgrounds at a speed in excess of fifteen (15) miles per hour.

20.320.6 It shall be unlawful to drive any motor vehicle at a speed in excess of thirty-five (35) miles per hour on any of the following streets:

Street	**Between**
Bonansinga Drive	Broadway and Cedar
Thirty-sixth	State and Meadowbrook Road
Maine	Thirty-sixth and Forty-eighth

20.320.7 It shall be unlawful to drive any motor vehicle at a speed in excess of forty (40) miles per hour on Bonansinga Drive between Cedar and Bluff Road.

20.320.8 It shall be unlawful to drive any motor vehicle at a speed in excess of twenty-five (25) miles per hour on Holiday Drive, Park Place and in Northridge Subdivision.

20.321 Traffic not to be obstructed --- No vehicle or street car shall be operated or allowed to remain upon any street in such a manner as to form an unreasonable obstruction to the traffic thereon.

20.322 Bicycles and motorcycles --- It shall be unlawful for more than one person to ride upon any bicycle propelled by human power upon the street, or for any person to ride upon any motorcycle other than upon a seat attached to said vehicle.

20.323 Unattended vehicles --- No person driving or in charge of a motor vehicle shall permit it to stand unattended without first stopping the engine, locking the ignition, and removing the key, or when standing upon any perceptible grade, without effectively setting the brake thereon and turning the front wheels to the curb or side of the highway. Whenever any police officer finds a vehicle unattended where such vehicle constitutes an obstruction to traffic, such officer is hereby authorized to provide for the removal of such vehicle to the nearest garage or other place of safety.

20.324 Unattended vehicles --- It shall be unlawful to leave any horse or other draft animal unattended in any street without having such animal securely fastened.

20.325 Clinging to vehicles --- It shall be unlawful for any person on any street riding a bicycle, motorcycle or any toy vehicle, to cling to or to attach himself or his vehicle to any moving motor vehicle wagon or street car.

20.326 Driving from alleys, driveways and garages --- The driver of a vehicle emerging from any alley, driveway or garage shall stop such vehicle immediately prior to driving onto a sidewalk or across a sidewalk line projected across such alley, or a street intersecting such alley, and shall exercise special care in driving said vehicle upon such sidewalk or across such line, or in entering such street and shall yield the right-of-way to all vehicles approaching upon such intersecting street.

20.327 Following fire apparatus --- Upon the sounding of gongs or warning devices used upon fire apparatus or fire patrol vehicles, drivers shall draw their vehicles as near to the right curb as is reasonably possible and shall remain standing until such fire apparatus has passed. It shall be unlawful for the driver of any vehicle other than one on official business to follow any fire apparatus in response to a fire alarm closer than one block.

20.328 Dropping debris on street ---

(1) No vehicle shall be driven or moved on any street unless each vehicle is so constructed or loaded as to prevent any of its load from dropping, sifting, leaking or otherwise escaping therefrom, except that sand may be dropped for the purpose of securing traction, or water or other substance may be sprinkled in cleaning or maintaining such street. It shall not be necessary, in order to constitute an offense under this Section, that a portion of such load become loose or detached, but is sufficient that it be so loaded or unsecured that it might reasonably be expected to co so.

(2) No person shall throw or deposit upon any street any glass, nails, tacks, cans or other substance likely to injure any person, animal or vehicle.

20.329 Through streets --- The following streets or parts of streets are hereby declared to be through streets or boulevards:

Street	From	To
Harrison	Twelfth	Twenty-fourth
Twenty-eighth	Broadway	Spruce
Front	Broadway	Jefferson
Fourth	Jefferson	Locust
Eighth	South City Limits	Locust
Twelfth	South City Limits	Locust
Twenty-fourth	South City Limits	North City Limits
Maine	Second	Forty-eighth
Broadway	Front	Forty-eighth
State	Seventh	East City Limits
Eighteenth	Jefferson	Locust .
Chestnut	Second	Thirtieth
Locust	Second	Twenty-fourth
Jefferson	Front	Twenty-fourth
Thirty-sixth	South City Limits	North City Limits
Gardner Exp.	York	South City Limits
Jackson	Front	Twenty-fourth
Third	York	Locust
Twenty-second	Broadway	Locust
Columbus Road	East City Limits	Thirty-sixth
Wismann Lane	Twenty-fourth	Thirty-sixth
Sixth	Maine	Harrison

Thirtieth	Chestnut	State
Harrison	Twenty-fourth	East City Limits
Tenth	Broadway	Locust
Jefferson	Front	Twenty-fourth
Eighteenth	Madison	Locust
Oak	Fourth	Thirtieth
Twenty-eighth	Harrison	Monroe
Hampshire	Front	Eighth
Vermont	Front	Eighth
Melview Road	East City Limits	West City Limits
Fifth	Broadway	North City Limits

Every driver traversing a through street intersecting with another through street shall. when suitable signs are erected, stop such vehicle before entering upon the intersecting through street and shall thereafter yield the right-of-way to vehicles on such intersecting through street unless a go signal is given at such intersection by a traffic officer or signal.

20.330 <u>Non-boulevard stops</u> ---

(1) All vehicles shall stop before entering and shall thereafter yield the right-of-way to vehicles on the following streets at the following intersections:

Streets - Stop	**Intersection**
Adams	Fifth
Adams	Sixth
Adams	Ninth
Adams	Sixteenth
Adams	Twenty-second
Aldo Blvd.	Twenty-second
Ashley	College
Baldwin Drive	Glendale
Birch Street	Koch's Lane
Biscayne	Hamilton
Cabot Road	Thirtieth
Cedar	Fifth
Cedar	Reservoir Park Road
Cedar	Sixteenth
Cedar	Twentieth
Cedar	Twenty-sixth
Cherry	Fifth
Cherry	Second
Cherry	Fifteenth
Cherry	Sixteenth
Cherry	Twentieth
Cherry	Twenty-sixth

Chestnut	Eighteenth
Chestnut	Second
College	Second
College Avenue	Fifth
College Avenue	North College
College Avenue	Thirty-third
College Avenue	Twentieth
College Avenue	Twenty-second
Columbus Road	Thirty-sixth
Crestview Drive	Lindell Avenue
East Avenue	York
Elm	Fifth
Elm	Ninth
Elm	Second
Elm	Thirteenth
Elm	Twentieth
Forrest	College Avenue
Gerard Drive	St. Charles Drive
Hampshire	Second
Hampshire	Twentieth
Hampshire	Twenty-fifth
Hampshire	Twenty-seventh
Harrison	Fifth
Harrison	Twelfth
Harrison	Twenty-eighth
Holford Drive	West Holford Drive
Huntington	East Huntington and West Huntington
Jackson	Fifteenth
Jackson	Fourteenth
Jackson	Seventeenth
Jackson	Sixteenth
Jackson	Twenty-second
Jefferson	Eighth
Jefferson	Front
Jefferson	Sixth
Jersey	Sixth
Kentucky	Fifth
Kentucky	Fourteenth
Kentucky	Ninth
Kenwood	College Avenue
Klondike Road (New)	Klondike Road (Old)
Klondike Road	Anne Avenue
Klondike Road	Mary Lane
Klondike Road	South Ninth
Klondike Road	St. Charles

Lawrence Road	Lindell Avenue
Lind	Fifth
Lind	Ninth
Lind	Second
Lind	Thirteenth
Lind	Twentieth
Lind	Twenty-seventh
Lind	Twenty- sixth
Lindell Avenue	Crestview Drive
Lindell Avenue	Shirlen Drive
Lindell	Thirty-sixth
Locust	Eighteenth
Locust	Fourth
Locust	Third
Lumber Avenue	Broadway
Madison	Seventh
Madison	Sixteenth
Madison	Seventeenth
Madison	Tenth
Madison	Twentieth
Madison	Twenty-first.
Madison	Twenty-second
Maple	Fifth
Maple	Twentieth
Marion	Thirty-ninth
Melody North	Melody Lane
Monroe	Seventh
Monroe	Fourteenth
Monroe	South bound Twenty-eighth
Monroe	Nineteenth
Monroe	Twentieth
Monroe	Twenty-second
Morton Drive	Fifth
North Branch	Lindell Avenue
North College	College Avenue
Oak	Second
Oak	Twentieth
Oak	Fifty-Second
Oakland	College
Ohio	Fifth
Ohio	Fourteenth
Ohio	Fifteenth
Ohio	Ninth
Ohio	Tenth

Ohio	Nineteenth
Ohio	Twentieth
Ohio	Twenty-first
Ohio	Twenty-second
Parkview Drive	Fifth
Payson Avenue	Nineteenth
Payson Avenue	Twentieth
Payson Avenue	Twenty-first
Payson Avenue	Fifth
Payson Avenue	Ninth
Payson Avenue	Sixteenth
Payson Avenue	Twenty-second
Peach Tree Lane (southbound)	Willow Creek Lane
Peters Lane	Melview Road
Seminary Road	Eighteenth
Shirlen Drive	Lindell Avenue
Spring	Fifth
Spring	Fourteenth
Spring	Second
Spring	Fifteenth
Spring	Sixteenth
Spring	Twentieth
Spring	Twenty-fifth
Spruce	Eleventh
Spruce	Fifth
Spruce	Ninth
Spruce	Twentieth
Spruce	Twenty-sixth
South 18th Street	Melview Road
St. Charles Drive	Gerard Drive
State	Carol Drive
State	Fifth
State	Poinsettia Drive
State	Sixth
Sycamore	Fifth
Sycamore	Ninth
Sycamore	Twentieth
Tamala Terrace	Melview Drive
Vail Drive	Melview Drive
Van Buren	Fifth
Van Buren	Seventh
Van Buren	Sixteenth
Van Buren	Twenty-second

Vermont	North/south alley between Broadway and Vermont between Twenty-fourth and Twenty-second
Vermont	Sixth
Vermont	Twentieth
Vermont	Twenty-fifth
Washington	Fifth
Washington	Ninth
Washington	Fifteenth
Washington	Nineteenth
Washington	Sixth
Washington	Sixteenth
Washington	Tenth
Washington	Twentieth
Washington	Twenty-first
Washington	Twenty-second
Washington	Twenty-third
West Holford Drive	Holford Drive
Willow Creek Lane	Peach Tree Lane (eastbound)
Woodbridge Drive	Ridgewood Drive
York	Eighth
York	Fourth
York	Sixteenth
Second	Cherry
Second	Chestnut
Second	Jersey
Second	York
Fifth	Harrison
Fifth	Kentucky
Fifth	Washington
Sixth	Jefferson
Sixth	Jersey
Sixth	Ohio
Sixth	Payson Avenue
Sixth	State
Sixth	Sycamore
Sixth	Vermont
Seventh	College
Seventh	Hampshire
Seventh	Harrison
Seventh	Ohio
Seventh	Payson Avenue
Seventh	Sycamore
Seventh	Washington
Eighth	Jefferson
Ninth	Elm

Ninth	Kentucky
Ninth	Lind
Ninth	Madison
Ninth	Monroe
Ninth	Ohio
Ninth	Payson Avenue
Ninth	Sycamore
Ninth	Washington
Tenth	Adams
Tenth	Kentucky
Tenth	Monroe
Tenth	Spruce
Tenth	Washington
Eleventh	Adams
Eleventh	College
Eleventh	Kentucky
Eleventh	Lind
Eleventh	Spruce
Eleventh	Washington
Twelfth	Harrison
Twelfth	Klondike Road
Twelfth	St. Charles
Thirteenth	College
Thirteenth	Spring
Thirteenth	Spruce
Thirteenth	Washington
Fourteenth	Elm
Fourteenth	Kentucky
Fourteenth	Ohio
Fourteenth	Spruce
Fifteenth	Elm
Fifteenth	Spruce
Fifteenth	Van Buren
Sixteenth	Elm
Sixteenth	Madison
Sixteenth	Spruce
Sixteenth	York
Sixteenth	Payson Avenue
Seventeenth	Adams
Seventeenth	Cherry
Seventeenth	Madison
Seventeenth	Ohio
Seventeenth	Elm
Seventeenth	Payson
Seventeenth	Spruce

Eighteenth	Chestnut
Eighteenth	Locust
Eighteenth	Seminary Road
Nineteenth	Adams
Twentieth	Adams
Twentieth	Cherry
Twentieth	Grove Avenue
Twentieth	Hampshire
Twentieth	Spring
Twentieth	Washington
Twenty-first	Adams
Twenty-first	Washington
Twenty-second	Reservoir Park Road
Twenty-third	Payson Avenue
Twenty-third	Ohio
Twenty-fourth	Schneidman Lane
Twenty-fifth	Cedar
Twenty-fifth	College Avenue
Twenty-fifth	Madison
Twenty-fifth	Vermont
Twenty-sixth	Cedar
Twenty-sixth	Monroe
Twenty-sixth	Lind
Twenty-seventh	Cedar
Twenty-seventh	College
Twenty-seventh	Vermont
Twenty-eighth	Carrot Road
Twenty-eighth	Chestnut
Twenty-eighth	Hampshire
Twenty-eighth	Kingsridge
Twenty-eighth	Monroe
Twenty-eighth	Oak
Thirtieth	College Avenue
Thirty-sixth	Columbus Road
Fifty-Second	Oak
All America Park Exit	Front Street
Bob Bangert Park North Exit	Front Street
Bob Bangert Park South Exit	Front Street
Parker Heights Park Exit	Front Street
Parker Heights Park Exit	Fifth Street
Kesler Park North Exit	Bonansinga Drive
Kesler Park South Exit	Bonansinga Drive
Kesler Park Mid Park Exit	Bonansinga Drive
Riverview Park Exit at Cherry	Second Street

Riverview Park Exit at Cedar	Second Street
Sunset Park Exit	Cedar Street
Gardner Park Exit	U.S. 24
Gardner Park East Exit	Parkview Drive
Gardner Park East Exit	Fifth Street
South Park Exit	Peter's Drive
South Park Exit	Twelfth Street
Indian Mounds Park Exit	Peter's Drive
Indian Mounds Park N. Exit	Fifth Street
Indian Mounds Park S. Exit	Fifth Street
Reservoir Park Exit	Cedar Street
Reservoir Park Exit	Twenty-second Street
Wavering/Moorman Exit	Thirty-sixth Street
Wavering/Moorman Main Park Drive (Three way stop)	Thirty-ninth Street
Wavering/Moorman Park Archery Range Exit	Main Park Drive
Wavering/Moorman Park Road Exit	Main Park Drive
Wavering/Moorman Dam Road Exit	Arboretum area
Madison Park Exit	Twenty-fourth Street
Clat Adams bicentennial Park (north exit)	Broadway
Clat Adams Bicentennial Park (south exit)	Hampshire
Alley between Eighth & Ninth, VanBuren & Jackson	Ninth

(2) All vehicles shall obey the light legend of any portable stop and go lights when in operation at any intersection where temporarily placed by the authority of the Chief of Police or the officer in charge of the police station for the direction of traffic, the same as if a police officer were present and directing such traffic.

(3) All vehicles shall stop at the exit of any park roadway before entering any intersecting street and shall thereafter yield the right-of-way to vehicles on such intersecting street.

20.331 **Stop and go lights** --- All vehicles shall obey the light legend of the stop and go lights located at the following intersections:

Street	Street	Street	Street
Twelfth	Locust	Third	Maine
Twenty-fourth	Locust	Fourth	Maine
Twelfth	Chestnut	Fifth	Maine
Twenty-fourth	Chestnut	Sixth	Maine

Third	Broadway	Seventh	Maine
Fourth	Broadway	Eighth	Maine
Sixth	Broadway	Twelfth	Maine
Eighth	Broadway	Fourteenth	Maine
Twelfth	Broadway	Eighteenth	Maine
Eighteenth	Broadway	Twenty-fourth	Maine
Twenty-fourth	Broadway	Thirtieth	Maine
Twenty-fifth	Broadway	Thirty-third	Maine
Thirtieth	Broadway	Thirty-sixth	Maine
Thirty-third	Broadway	Eighth	Jersey
Thirty-sixth	Broadway	Twelfth	Jersey
Forty-eighth	Broadway	Eighth	State
Eighth	Vermont	Twelfth	State
Twelfth	Vermont	Twenty-fourth	State
Eighteenth	Vermont	Thirtieth	State
Fourth	Hampshire	Thirty-sixth	State
Fifth	Hampshire	Jefferson	Gardner Expressway
Sixth	Hampshire	Twelfth	Jefferson
Eighth	Hampshire	Eighth	Payson
Twelfth	Hampshire	Thirty-sixth	Harrison
Thirty-eighth	Broadway	Fifty-second	Broadway
Fifty-fourth	Broadway	Twenty-fourth	Wisman Lane
Twenty-fourth	Kochs Lane		

20.332 One-way streets --

(1) The following are designated one-way streets and are through streets:

Street	**Between**	**Direction**
York	Third and Twelfth	East
Vermont	Eighth and Twenty-fourth	East
East/west alley between Jefferson and Washington	Ninth and Tenth	West
Hampshire	Twenty-fourth and Eighth	West
Third	Locust and York	South
Fourth	Locust and York	North
East-west alley between Oak and College if extended	Twentieth & Eighteenth	West
Payson (south side of parkway)	Sixth and Seventh	East
Payson (north side of parkway)	Sixth and Seventh	West
Jersey	Third and Fourteenth	West
East-west alley between Washington and Jefferson	Eighth and Ninth	East
East-west alley between State and Ohio	Seventh and Eighth	West

Bangert Park	Park Drive from north of south north restroom to parking lot north of north restroom	North
Moorman Park	Intersection of Dam Road	East
North/South alley between 22nd and 24th Streets	Vermont and Broadway	North
Alleyway, Maine to Jersey	Seventh and Eighth	East
East/West alley from Eighth to Ninth	VanBuren and Jackson	East
East/west alley from 18th to 20th	Broadway and Spring	West

20.333 <u>Train signals</u> ---

(l) The driver of a vehicle approaching railroad grade crossing when a flagman or signal device gives warning of the immediate approach of a train, shall stop within 50' but not less that 10' from the nearest track of such railroad and shall not proceed until he can safely do so.

(2) The driver of a vehicle shall stop and remain stopped and shall not traverse such grade crossing when signal device is operating or when a flagman gives a signal of the approach of a train.

(3) The driver of any motor vehicle carrying passengers for hire, or of any school bus, or of any vehicle carrying explosives or flammable liquids as cargo, shall stop such vehicle within 50' but not less than 10' from the railroad tracks and shall listen and look in both directions from which a train might come, before proceeding across such tracks at a grade crossing; provided, that the provisions of this paragraph shall not apply when traffic at a crossing is directed by an officer or stop and go signal.

(4) No train shall obstruct a public crossing for a period of longer than five minutes.

20.334 <u>Bicycles and motorcycles</u> ---

(1) Persons riding bicycles or motorcycles on the streets shall not ride in such a manner that such vehicles are arranged with more than two abreast of each other.

(2) No motorcycle shall be ridden on any sidewalk or parkway, and no bicycle shall be ridden on any sidewalk in a business district or where such riding endangers pedestrians.

(3) A person operating a motorcycle shall ride only upon the permanent and regular seat attached thereto, and such operator shall not carry any other person nor shall any other person ride on a motorcycle unless such motorcycle is designed to carry more than one person, in which event a passenger may ride upon another seat firmly attached at the rear or side of the operator.

(4) No bicycle shall be driven from sunset to sunrise without displaying a white light at the front end and red reflector at the rear or with insufficient brakes to lock one wheel thereof.

20.335 <u>Height Limitations</u> --- No vehicle with a height in excess of 9' shall travel on 11th Street between Broadway and the alley to the north.

20.336 <u>Toy vehicles</u> --- It shall be unlawful for any person upon skates, a coaster, sled or other toy vehicle to go upon any roadway other than at a crosswalk.

20.337 Riding on running boards --- It shall be unlawful for any person to ride upon the fenders, running board or outside stop of any vehicle.

20.338 Driving through funeral or other processions --- No person shall drive through any funeral or other authorized procession while they are in motion and when such vehicles are conspicuously designated as required in this Article. This provision shall not apply at intersections where traffic is controlled by traffic control signals or police officers.

20.339 Drivers in a procession --- Each driver in a funeral or other procession shall drive as near to the right-hand edge of the roadway as practical and shall follow the vehicle ahead as closely as is practical and safe.

20.340 Funeral processions to be identified --- A funeral composed of a procession of vehicles shall be identified as such by the display upon the outside of each vehicle of a pennant or other identifying insignia and by having the lights of each vehicle lighted.

20.341 Backing --- The driver of a vehicle shall not back the same unless such movement can be made with reasonable safety without interfering with other traffic.

20.342 Weight limitations --- Wherever the weight of vehicles permitted on a street is limited by ordinance and signs and limiting such limitations are posted, it shall be unlawful to operate a vehicle in excess of such weight on such street excepting for the purpose of making delivery or picking up a load; in which case such vehicle may be driven on such street for not more than the minimum distance necessary for the purpose.

20.343 Trucks prohibited on certain streets --- It shall be unlawful to drive any truck, except for the purpose of making a delivery, and then for only one block, on any of the streets so designated by ordinance and appropriately posted as such.

Street	**Between**
Twenty-seventh	Maine and Broadway
Twenty-fifth	College Avenue and Spring
All streets in Southern View	

20.344 Driving over fire hose --- No vehicle shall be driven over any unprotected hose of the fire department without the consent of the fireman in charge.

20.345 Yield right-of-way --- All vehicles shall grant the privilege of the immediate use of the intersection roadway to traffic within the intersection and to vehicles approaching from the right and left upon entering the following streets at the following intersections:

Streets - Yield	**Intersection - To**
Fifth	Kentucky

Sixth	College Avenue
Seventh	Ninth
Seventh	Lind
Seventh	Adams
Ninth	Elm
Ninth	College Avenue
Ninth	Washington
Ninth	Cherry
Tenth	Payson
Eleventh	Cedar
Eleventh	Cherry
Eleventh	Ohio
Thirteenth	Ohio
Thirteenth	Sycamore
Fourteenth	Maple
Fourteenth	College
Fourteenth	Lind
Fifteenth	Madison
Fifteenth	College
Fifteenth	Lind
Sixteenth	College Avenue
Sixteenth	Lind
Sixteenth	Ohio
Seventeenth	College Avenue
Seventeenth	Lind
Seventeenth	Maple
Seventeenth	Spring
Twentieth	Jackson
Twenty-third	York
Twenty-third	Jackson
Twenty-fifth	Cherry
Twenty-seventh	Lind
Twenty-seventh	Cherry
Twenty-seventh	Elm
Abbey Ridge	Nottingham
Amber Avenue	Eighteenth
Anne Avenue	St. Charles Drive
Bedford	Breckenridge Drive
Cedar	Sixth
Cedar	Seventh
Cedar	Ninth
Cedar	Fifteenth
Cedar	Twentieth
Cherry	Sixth
Cherry	Seventh

Covington Lane	Peach Tree Lane
Diamond Drive	Eighteenth
Elm	Sixth
Elm	Seventh
Golden Grove	Eighteenth
Jersey	Twentieth
Kentucky	Ninth
Kentucky	Fourteenth
Kentucky	Sixteenth
Kingsridge	Thirtieth
Luxury Lane	Eighteenth
Lind	Sixth
Madison	Seventeenth
Madonna	St. Charles Drive
Maple	Sixth
Maple	Ninth
Maple	Thirteenth
Maple	Fifteenth
Maple	Sixteenth
Monroe	Sixteenth
North Granview	Center Granview
Payson	Eleventh
Payson Avenue	Fourteenth
Quail Creek	Forty-sixth
Quintron Way	Hollister-Whitney Parkway
Spring	Sixth
Spring	Ninth
Spring	Seventh
Spring	Twentieth
Spruce	Sixth
Spruce	Seventh
Sycamore	Sixth
Sycamore	Seventh
Sycamore	Ninth
Sycamore	Fourteenth
Sycamore	Fifteenth
Sycamore	Sixteenth
Washington	Fourteenth
Woodland Trail	Forty-Sixth

20.346 **Fleeing to avoid arrest** --- No driver of any motor vehicle shall flee or drive in a careless manner, or at a speed greater than the lawful rate, or at nighttime with lights out, or fail to observe traffic control signals or signs, or in any other manner so as to avoid arrest when pursued by a police officer.

20.347 <u>Opening doors</u> --- No person shall open the door of a motor vehicle on the side available to moving traffic unless and until it is reasonably safe to do so, and can be done without interfering with the movement of other traffic, nor shall any person leave a door open on the side of a vehicle available to moving traffic for a period of time longer than necessary to load or unload passengers.

20.348 <u>Alleys - through traffic prohibited</u> --- All alleys in the City of Quincy shall be closed to through traffic between sunset and sunrise.

ARTICLE IV CONDITION OF VEHICLES

Section 20.401 **Clear vision** --- It shall be unlawful to operate any vehicle which is so loaded or in such a condition that the operator does not have a clear vision of all parts of the roadway essential to the safe operation of the vehicle. Any vehicle that is so constructed or loaded that the driver's view of the roadway to the rear is obstructed shall be equipped with a mirror so attached as to give him a view of the roadway behind him.

20.402 **Turn signals** --- Any motor vehicle in use on a highway shall be equipped with a signal lamp or lamps or mechanical signal device to indicate an impending turn when the distance from the center of the top of the steering post to the left outside limit of the body, cab, or load of such motor vehicle exceeds 24 inches, or when the distance from the center of the top of the steering post to the rear limit of the body or load thereof exceeds 14 feet. The latter measurement shall apply to any single vehicle, also to any combination of vehicles.

20.403 **Unnecessary noise** --- It shall be a lawful to operate a vehicle which makes unusually loud or unnecessary noise.

20.404 **Horn** --- Every motor vehicle shall be equipped with a good and sufficient audible signaling device in efficient working condition. Such signaling device shall be sounded when necessary to give timely warning to the approach of a vehicle, but such horn or other signaling device shall not be sounded for any other purposes other than an emergency vehicle shall be equipped with a siren or gong signaling device.

20.405 **Gas and smoke** --- It shall be unlawful to operate any vehicle which emits dense smoke or such an amount of smoke or fumes as to be dangerous to the health of persons or as to endanger the drivers of other vehicles.

20.406 **Projecting loads - width and height** ---

(1) The maximum width and height of any vehicle and its load shall not exceed the limits expressed in the State Traffic Law.

(2) No passenger type vehicle shall be operated on the streets with a load extending beyond the line of the fenders on the left side of the vehicle nor extending more than six inches beyond the line of the fenders on the right side thereof.

(3) No vehicle, unladen or with a load, shall exceed a length of forty-two feet extreme over all dimension.

(4) No combination of vehicles coupled together shall consist of more than two units, and no such combination of vehicles, unladen or with load, shall exceed a total length of fifty feet; but such length limitation shall not apply to vehicles operated in the daytime when transporting poles, pipes, machinery or other objects which cannot be readily dismembered nor to such vehicles operated at nighttime by a public utility when engaged in emergency repair work; but such loads carried at night shall be clearly marked with sufficient light, to show the full dimensions of the load.

(5) No part of the load of a vehicle shall extend more than three feet in front of the extreme front portion of the vehicle.

20.407 Brakes --- It shall be unlawful to drive any motor vehicle on any street unless such vehicle is equipped with good and sufficient brakes in good working condition, as required by state traffic law, or to operate any vehicle which is so loaded that the operator does not have ready access to the mechanism operating the brakes of such vehicle.

20.408 Muffler --- No motor vehicle shall be operated on any street unless such vehicle is provided with a muffler in efficient actual working condition; and the use of a cut-out is prohibited.

20.409 Lights --- It shall be unlawful to operate or park on any street any vehicle not equipped with adequate lights conforming to the requirements of the state law.

Any motor vehicle owned or usually operated as volunteer fireman may be equipped with not to exceed two lamps which shall emit a blue light without glare. One such lamp may be mounted on the rear of any such vehicle. Except that a flashing light may be used only when such fireman is responding to a fire call.

20.410 Non-skid devices --- It shall be unlawful to operate upon any street any motor vehicle equipped with any non-skid device so constructed that any rigid or non-flexible portion thereof comes into contact with the pavement, or roadway.

20.411 Tires --- It shall be unlawful to operate on any street any motor vehicle which is not equipped with tires conforming to the requirements of the state law.

20.412 Weight --- It shall be unlawful to drive on any street any motor vehicle with a weight, including load, in excess of that permitted by the state traffic law for driving on improved highways, or with weight distributed in a manner not conforming to such law.

(1) It shall be unlawful to drive any motor vehicle with a weight, including load, in excess of 10 tons, except emergency vehicles and Quincy Transit Lines buses, on South Park Road between Twelfth Street and Gardner Expressway.

(2) It shall be unlawful to drive any motor vehicle, except city garbage trucks, with a weight, including load in excess of 10 tons on Klondike Road between Twelfth Street and Eighth Street.

(3) It shall be unlawful to drive any motor vehicle with a weight, including load, in excess of 10 tons on Whewell Drive from Twenty-ninth to Thirtieth and on Twenty-ninth from Broadway to Whewell Drive. City garbage trucks, emergency vehicles, and maintenance and repair vehicles servicing properties located in said streets are exempt from this section.

(4) It shall be unlawful to drive any motor vehicle with a weight, including load, in excess of 10 tons except emergency vehicles, on Gardner Park Road between Fifth Street and U.S. Route 24.

(5) It shall be unlawful to drive any motor vehicle with a weight, including load, in excess of 10 tons on Thirty-ninth Street from Columbus Road to Wavering Park. City garbage trucks, emergency vehicles, and maintenance and repair vehicles servicing properties located on said streets are exempt from this section.

(6) It shall be unlawful to drive any motor vehicle with a weight, including load, in excess of 15 tons on 8th Street from Curtis Creek Bridge to Klondike Road. City garbage trucks, emergency vehicles, and maintenance and repair vehicles which are servicing this street are exempt from this section.

(7) It shall be unlawful to drive any motor vehicle with a weight, including load, in excess of 15 tons on Second Street between Chestnut and Elm, on Lind Street between Second Street and Third Street, on Elm Street between Second Street and Third Street and on College between Second Street and Third Street. City garbage trucks, emergency vehicles, and maintenance repair vehicles which are servicing these streets, or streets accessible only by these streets, are exempt from this section.

(8) It shall be unlawful to drive any motor vehicle with a weight, including load, in excess of 8,000 pounds on the "H" alley between Sixteenth Street and Eighteenth Street, Kentucky and State Street. City garbage trucks, emergency vehicles, and maintenance/repair vehicles which are servicing this alley are exempt from this section.

ARTICLE V PARKING RULES

Section 20.501 **<u>No stopping or standing areas</u>** --- It shall be unlawful to permit any vehicle, except when necessary to avoid conflict with other vehicles or pedestrians or in compliance with the direction of a traffic policeman or signal, to stop or stand in any of the following places:

(1) In any intersection;

(2) In a crosswalk;

(3) At any place where the standing of a vehicle reduces the useable width of the roadway from moving traffic to less than 18';

(4) Within 20' of a driveway entrance to any fire department station;

(5) Upon any bridge or viaduct, or in any subway or the approach thereto;

(6) Within 20' of any intersection; except, however, within 30' of the intersection of Thirtieth and Maine Streets, and within 40' of the intersection of Eighteenth and Elm Streets;

(7) Within 50' of the nearest rail of a railroad crossing;

(8) On any sidewalk or parkway;

(9) At any place where official signs prohibit parking;

(10) Within 4' of the side of any railroad tracks;

(11) Within any of the following areas from the intersection to the hereinafter designated points, when the curbs at said locations are painted yellow:

State Street, north side, 100' east and 140' west of the intersection with Eighth Street; south side, 140' east and 100' west of the intersection with Eighth Street;

Eighth Street, east side, 100' south and 140' north of the intersection with State Street; west side, 140' south and 120' north of the intersection with State Street;

Eighth Street, east and west sides, 140' south and 140' north of the intersection with State Street;

Maine Street, north and south side, extending to a point 60’ west of the centerline of Sixth Street;

Maine Street, north and south sides, extending to a point 68’ east of the centerline of Sixth Street;

Sixth Street, east and west sides, extending to a point 98' north of the centerline of Maine Street;

Sixth Street, east and west sides, extending to a point 70' south of the centerline of Maine Street;

Maine Street, north and south sides, extending to a point 62’ east of the centerline of Fifth Street;

Fifth Street, east side, extending to a point 70' north and south of the centerline of Maine Street;

State Street, south side, commencing at the intersection of Seventeenth Street extending west 30';

State Street, north side, commencing at Eleventh Street and extending to a point 58’ east of the east curb line of Eleventh Street.

Fifth Street, west side, commencing at the intersection of Maine Street, extending north 42’;

Maine Street, north and south sides, beginning 185' west of the centerline of Twenty-fourth Street and extending east to a point 190’ east of the centerline of Twenty-fourth Street;

York, north side, between Third and Fourth Streets;

York, south side, between Third and a point 80' east of the east curb line of Third Street;

Fourth, east side, between York and a point 85' north of the north curb line of York;

Fourth, west side, between York and a point 160' north of the north curb line of York;

Jefferson, north side, commencing at the east curb line of Eighth Street and extending east 197';

Eighth Street, east and west sides, extending to points both north and south a distance of 50' from the north and south curb lines, respectively, at the intersection with Oak Street;

Koch's Lane, south side, beginning on the west curb line of Birch Street running west for a distance of 50';

Cherry Street, south side, commencing at the east curb line of Fourth Street and extending to a point 75 east;

Seventh Street, west side, beginning 156' south of centerline of York Street and extending south to a point 216' south of the centerline of York Street;

Seventh Street, east side, commencing at the south curb line of Jersey Street and extending to a point 70' south;

Eleventh Street, east side, between a point 10' north and a point 10' south of the alley between Maine and Hampshire Streets;

Twelfth Street, west side, commencing at Jackson and extending north 40’;

Twelfth Street, east side, commencing at Jackson Street and extending to a point 77’ north of the north curb line of Jackson Street;

Center Avenue, north and south sides, commencing at the east curb line of Sixteenth Street and extending to a point 40';

Koch's Lane, north and south sides, commencing at Twelfth Street and extending east to a point 200' east of the centerline of Twelfth Street;

Koch's Lane, north and south sides, commencing at Eighteenth Street and extending west to a point 200' west of the centerline of Eighteenth Street;

Koch's Lane, north and south sides, commencing at Eighteenth Street and extending east to a point 200' east of the centerline of Eighteenth Street;

Eighteenth Street, east and west sides, commencing at Koch's Lane and extending north to a point 200' north of the centerline of Koch's Lane;

Eighteenth Street, east and west sides, commencing at Koch’s Lane and extending south to a point 200’ south of the centerline of Koch’s Lane;

Koch's Lane, north and south sides, commencing at Twenty-fourth Street and extending west to a point 200' west of the centerline of Twenty-fourth;

Eighteenth Street, west side, commencing at a point 20’ south of the parking lot entrance between Elm Street and Lind Street and continuing 30’ north of the parking lot entrance between Elm Street and Lind Street;

Third Street, west side, commencing at Hampshire Street and extending to a point 73' north of the north curb line of Hampshire Street;

Vermont Street, south side, commencing at Twenty-fifth Street and extending to a point 52’ west of the west curb line of Twenty-fifth Street;

Sixth Street, east side, commencing at a point 73’ south of the south curb line of State Street and extending south 47’;

State Street, south side, beginning at the intersection with Sixteenth Street and extending 56’ east of the east curb line of Sixteenth Street;

State Street, south side, beginning at the intersection with Sixteenth Street and extending 74’ west of the west curb line of Sixteenth Street;

State Street, north side, commencing at Sixteenth Street and extending east to a point 53’ east of the east curb line of Sixteenth Street;

State Street, south side, commencing at a point 55’ west of the west curb line of Ninth Street and extending to a point 53’ east of the east curb line of Ninth Street;

Twentieth Street, east side, commencing at Broadway and extending south to a point 85’ south of the south curb line of Broadway;

Jackson Street, south side, commencing at Eleventh Street and extending west to a point 74’ west of the west curb line of Eleventh Street;

Eleventh Street, east side, commencing at the north curb line of Oak Street and extending north to a point 47’ north of the north curb line of Oak;

Eleventh Street, west side, commencing at the north curb line of Oak Street and extending north to a point 47’ north of the north curb line of Oak;

Oak Street, south side, commencing at a point 55’ west of the west curb line of Eleventh Street and extending east to a point 54’ east of the east curb line of Eleventh;

Oak Street, north side, commencing at a point 55’ west of the west curb line of Eleventh Street and extending east to a point 54’ east of the east curb line of Eleventh;

Tenth Street, east side, commencing at a point 55’ south of the south curb line of Oak Street and extending north to a point 53’ north of the north curb line of Oak;

Tenth Street, west side, commencing at a point 54’ south of the south curb line of Oak Street and extending north to a point 80’ north of the north curb line of Oak;

Oak Street, south side, commencing at a point 63’ west of the west curb line of Tenth Street and extending east to a point 53’ east of the east curb line of Tenth Street;

Oak Street, north side, commencing at a point 53’ west of the west curb line of Tenth Street and extending east to a point 63’ east of the east curb line of Tenth Street;

Tenth Street, west side, commencing at the north curb line of Oak Street and extending north to the south curb line of College Avenue;

South Sixth Street, west side, commencing at the north curb line of Adams and extending north 40’;

Maine Street, north side, commencing at Sixteenth Street and extending east to a point 58’ east of the east curb line of Sixteenth Street.

Twelfth Street, east side, commencing at the south curb line of Kentucky Street and extending to a point 53’ south of the south curb line of Kentucky Street.

Jefferson Street, south side, commencing at Twenty-first Street and extending west to a point 60’ west of the west curb line of Twenty-first Street.

North Tenth Street, east side, commencing at a point 64’ north of the north curb line of Sycamore and extending 102’ north thereof.

College Avenue, north side, commencing at a point 141’ east of the east curb line of Eleventh Street and extending 113’ east thereof.

Tenth Street, west side, commencing 10’ both north and south of each of the two driveways into Blessing Hospital parking lot between the alley north of Broadway and what use to be Spring Street.

Twenty-second Street, west sides, commencing at the south curb line of State Street and extending 120’ south thereof.

Chestnut Street, north side, commencing at the west curb line of Twentieth Street and extending 81’ west thereof.

(12) On the following streets between the hours of 7:00 a.m. and 9:00 a.m. and between the hours of 3:30 p.m. and 5:30 p.m. except that such prohibition shall not apply to Sundays and holidays:

Streets	**Side of Street**	**Between**
Thirtieth	East & West	Chestnut and Maine

Each successive 30 minute period of violation shall constitute a separate offense.

(13) Within 5' each side of the intersection of a public alley with a street or park way.

(14) On Sixteenth Street, west side, between Locust Street and Wells Avenue during the hours 8:00 a.m. to 4:00 p.m., Monday thru Friday.

(15) On the following street between the hours of 3:00 p.m. and 5:30 p.m. except that such prohibition shall of apply to Saturdays, Sundays and holidays:

Street	**Side of Street**	**Between**
Chestnut	North	From a point 50' east of Twenty-fourth to a point 100’ east of Twenty-fourth

(16) On the following streets between the hours of 6:00 a.m. and 6:00 p.m.:

Street	**Side of Street**	**Between**
Harrison	South	Eighth and Ninth Streets
Thirtieth	West	Maine and Aldo Blvd.
Maine	North & South	Thirtieth and 640' west of the centerline of Thirty-sixth
Thirty-sixth	East & West	550' north of centerline of Broadway and north to the north City Limit

(17) On the following street on all days except that such prohibition shall not apply to Sundays:

Street	**Side of Street**	**Between**
Chestnut	North	Tenth and point 50' west

(18) On Chestnut Street, along the south side of the street, commencing at a point 115' east of Twenty-eighth and Chestnut Streets, running east to the first driveway along Chestnut Streets.

(19) On the following streets from Monday through Friday between the hours of 7:00 a.m. and 9:00 a.m. and between the hours of 4:00 p.m. and 6:00 p.m.:

Street	**Side of Street**	**Between**
Fourth	East	Vermont and point 230' north
Fourth	West	Vermont and Hampshire
Fourth	West	Hampshire and point 350' south
Fourth	West	A point 90' south of Maine and a point 250' south of Maine
Fourth	East	A point 100' south of Maine and a point 210' south of Maine

(20) **Parking on parkways**: Between that portion of a street or highway actually improved, designed and used for vehicular traffic and the adjacent property lines of private property not subject to a right-of-way or public ownership. Without limiting the effect of this provision, it is intended that this provision shall make unlawful parking on sidewalks, parkways, grass ways or other areas between the paved or improved portion of a street or highway and adjacent property lines of private property not subject to a right-of-way or public ownership.

(21) On the following streets between the hours of 8:00 p.m. and 6:00 a.m.:

Street	**Side of Street**	**Between**
Elm	South	Ninth to a point 79' west of the curb line of Ninth
Ninth	West	Elm and to a point 100' north of Elm
Elm	North	Ninth and a point 100' west
Ninth	East	Elm and a point 200' north
Lind	South	Ninth Street and a point 30’ east

(22) On the following portions of State Street, Twenty-fourth Street and Thirty-sixth Street at any time: Twenty-fourth Street from a point 84.7 meters (278’) south of its intersection with State Street to a point 103.6 meters (340’) north of its intersection with State Street, State Street from a point 83.8 meters (275’) west of its intersection with Twenty-fourth Street to a point 140.2 meters (460’) east of its intersection with Thirty-sixth Street, Thirty-sixth Street from a point 143.3 meter (470’) south of its intersection with State Street to a point 155.8 meters (511’) north of its intersection with State Street.

(23) Tenth Street, east side, 20’ north and south of the alley entrance between Vermont and Hampshire.

(24) Oak Street, south side, between the driveways at 2004 and 2010 Oak Street.

(25) Twenty-fourth Street, east and west sides, Broadway to Koch’s Lane.

(26) The operator of a motor vehicle shall not park such vehicle on either side of Hampshire between Front Street and the alley to the east thereof, which is a point 80’ along the south side of Hampshire and 100’ along the north side of Hampshire, during the hours of 6:00 a.m. through 3:00 p.m. Monday through Saturday.

20.502 <u>Truck parking limits</u> ---

(1) No truck designed to be used for the pulling or carrying of freight having a gross weight of 16,000 pounds or more (including the weight of its vehicle plus its maximum load) or truck and trailer, semi-truck or trailer, semi-tractor truck or trailer, shall park on any city street or alley for a period in excess of one hour in any 24 hour period, unless actively loading or unloading; provided that said loading and unloading shall not exceed four hours in any 24 hour period, in any residential zoned neighborhood.

(a) The Chief of Police may grant special permits to park trucks, as defined above, in the City of Quincy for periods in excess of one hour upon application to the Chief of Police by the owner of such truck. If such application is denied by the Chief of Police, such owner may appeal that decision directly to the City Council, who shall review such application for permit and upon review either grant or deny such application.

20.503 <u>Posted parking zones</u> ---

(1) **Two hour**: The operator of a vehicle shall not park such vehicle in any one block upon any of the following streets for a period of time longer than two hours in a single day between the hours of 8:00 a.m. and 5:00 p.m. and except on Sundays and holidays:

Street	Side of Street	Between
Third	East	Maine to Hampshire
Fourth	East & West	Maine and Jersey
Fifth	East	Jersey and the alley to the south
Sixth	East	Spring and 200' north thereof
Eighth	West	Commencing at the south curb line of Kentucky and extending south 320'
Eighth	West	Ohio and a point 223' to the north
Eighth	East	Ohio and a point 285' to the north
Tenth	West	Maine and Hampshire
Tenth	West	Commencing at a point 160’ south of the south curb line of Vermont and extending south 145’
Tenth	East & West	Broadway and Vermont
Tenth	East	A point 7' south of driveway of Blessing Hospital and continuing south 127'
Eleventh	West	Commencing at the south curb line of Hampshire and extending to a point 172' south
Eleventh	West	A point beginning 290' south of the curb line of Jackson to a point 75' south
Twelfth	West	Hampshire and Vermont known as 209 North Twelfth
Twelfth	West	A point 325' north of centerline of Locust and point 445’ north of centerline
Twelfth	East	A point 378' north of centerline of Locust and point 495’ north of centerline

Fourteenth	West	Commencing at a point 30' north of Broadway and extending north 100'
Fourteenth	East & West	Broadway and Vermont
Fourteenth	East	Broadway and the first alley to the north
Alleyway, Maine to Jersey	South	Third and Fourth
Seventeenth	East	Broadway and Spring
Seventeenth	West	North curb line of Locust to a point 95' north
Eighteenth	West	Oak and College Avenue
Twentieth	West	Broadway and a point north of Broadway which is equivalent to two parking stalls
Twentieth	West	Maine and Jersey
Twentieth	West	Two parking spaces north of Hampshire
Cedar	North & South	Twenty-seventh to Titan Wheel parking lot
Front	East & West	Hampshire and Vermont
Hampshire	North & South	Eighth to Ninth (except as provided in Section 20.602)
Hampshire	North	Two parking spaces west of Twentieth Street
Hampshire	South	Commencing at the west curb line of Eleventh Street and extending to a point 152' west
Jersey	North	Eighth to Ninth
Maine	South	Thirtieth to east property lines of school
Maine	North	Twenty-eighth and Thirtieth
Maine	South	Twentieth and East Avenue
Maine	South	Twentieth west to the driveway by Loethen Flooring
Ohio	North	East curb line of Eighth and a point 40' east
Ohio	North	In front of 815-17 Ohio as signed and marked on pavement
Spring	North	Sixth and 200' east thereof
Spring	North & South	Seventeenth and Eighteenth
Vermont	South	Ninth to Tenth
Vermont	South	Commencing at Tenth Street and extending east to a point 200' east of the east curb line of Tenth Street
Alley (Stag Shop Avenue)	North	Eighth and Ninth Streets, State and Kentucky Streets

(2) **One Hour**: The operator of a vehicle shall not park such vehicle in any of the following areas upon any of the following streets for a period of time longer than one hour in a single day between the hours of 8:00 a.m. and 5:00 p.m. and except on Sundays and holidays:

Street	**Side of Street**	**Between**
Eleventh	East & West	Broadway south to the alley

Chestnut	North	One 20' parking space in front of 1931 Chestnut
Ninth	West	South curbline of Broadway and point 40’ south
Chestnut	South	East curb line of Twelfth and a point two parking spaces east
Tenth	East	Commencing at a point 260' north of the north curb line of Broadway and extending north 75'

(3) **Thirty Minute**: The operator of a vehicle shall not park such vehicle in any of the following streets for period of time longer than thirty (30) minutes in a single day, between the hours of 8:00 a.m. and 5:00 p.m. except on Sundays and holidays:

Street	**Side of Street**	**Between**
Eighth	West	Alley south of Jefferson to Jefferson
Alley 7th – 8th	North and South	Maine and Jersey

(4) **Fifteen Minutes**: The operator of a vehicle shall not park such vehicle in any of the following streets for a period of time longer than fifteen (15) minutes in a single day between the hours of 8:00 a.m. and 5:00 p.m. except on Sundays and holidays:

Street	**Side of Street**	**Between**
Fourth	West	A point 47' north of north line of Maine and first driveway north of Lincoln Douglas Apartments
Vermont	South	120' east of east curb line of Twelfth extending east 20'
Fourth	East	A point 112' south of the south curb line of Maine and extending south a distance of 20'
Eighth	West	Commencing at a point 65' south of the south curb line of Maine and extending to a point 44' south
Eighth	East	Commencing at the north curb line Van Buren and extending north to the alley
Hampshire	North	In front of 1017 Hampshire
Fifth	East	First parking space north of the alley between Maine and Jersey

(5) **Fire apparatus parking**: It shall be unlawful for any vehicle to park in the following designated area except for a vehicle of the Quincy Fire Department.

Street	**Side of Street**	**Between**
Ninth	East	South curb line of Vermont and a point 35' south

(6) **One hour**: The operator of a vehicle shall not park such vehicle in any of the following areas upon any of the following streets for a period of time longer than one hour in a single day between the hours of 8:00 a.m. and 6:00 p.m. and except on Sundays and holidays:

Street	**Side of Street**	**Between**
Chestnut	South	One 20' parking space in front of 1806 Chestnut

(7) The operator of a vehicle shall not park such vehicle on either side of Rutledge Place or Lincoln Hill N.E., Lincoln Hill NW between 30th Street and Lincoln Hill Court NW, 28th to 30th Hampshire, north and south and Edgewood Drive between State Street and a point 255' south thereof, for a period of time longer than 3 hours in a single day between the hours of 8:00 a.m. to 4:00 p.m., Monday through Friday, from September 1st to June 1st.

(8) The operator of a motor vehicle shall not park such vehicle on the following street during the hours of 7:00 a.m. thru 7:00 p.m., Monday thru Saturday, on 25th Street east side, beginning 5’ south of the south curb line of Prentiss Avenue and extending south to the first driveway south of Prentiss Avenue.

20.504 **Parking in parkway** --- It shall be unlawful to park in the public parkway except in the following locations:

Street	**Side of Street**	**Between**
Lind	North	Tenth an 130' west
24th	West	Broadway and 200' north
Lind	North	Twelfth and 90' east
York	South	Second and 200' west
Second	West	Hampshire and 175' north
Vermont	North	Front to Third
College	North	Fourth and 50' east
Seventeenth	West	Spring and 70' north
Jersey	North	50' in front of 813 Jersey
Locust	South	Twelfth and 122' east
Front	East	Delaware and 165' north
Ninth	West	Jefferson and 60' north
Maine	North	Second and 134' west
York	South	Seventh and 220' east
Maiden Ln	South	Front and 45' east (no angle parking allowed)
Spring	South	A point 170' east of Second and a point 250' east of 2nd

Provided, however, that all restrictions herein contained regulating length of time parking is permitted shall apply in the above locations and provided further that it shall be unlawful to park so that less than 3’ of unobstructed passage is free for pedestrians. The license granted by this section shall apply only when such areas are marked with clearly painted parking line.

20.505 <u>Parking on sidewalks</u> ---

(1) **Parking prohibited**: It shall be unlawful to park, or allow to stand, any vehicle on any public sidewalk even for the actual loading or unloading of persons.

(2) **Exceptions**:

(a) **Designation procedures**: The City Council may make exceptions to the general prohibitions against parking on sidewalks. Such exceptions shall be limited to those sidewalks immediately adjacent to the designated property to which the exception applies. It is nevertheless the intent of the City Council that parking on public sidewalks shall in all events be eventually eliminated and other suitable off-street parking provided. The City Council may, accordingly, withdraw any such exception at any time.

(b) **Review of exceptions**: In the event the designated property to which an exception applies is sold, there is street construction adjacent thereto, the business or use of such property changes or other reason exists to eliminate any such exception, the City Engineer shall recommend the elimination of such exception to the City Council. The City Council may thereafter consider the elimination of such exception.

(c) **Exceptions**: Parking on public sidewalks shall, irrespective of the general prohibition here, be allowed at the following locations:

Property Description	Location
County Market	Ninth and Jefferson
Gem City Electric Co.	Seventh & York
Quincy Radiator & Welding Shop	718 York
The Furniture Mart	127 Maine
Moorman Mfg. Co.	Front and Delaware
Consumers Sales Distributing Co.	833 Jersey
Whiskey Downs	1631 Spring
Willie's Café	401 College Ave.
South Side Boat Club	Delaware, west of Front
The Plaza	900 North Twelfth
Kuester Tool & Die Co.	123 Hampshire
Hollister-Whitney Elevator Corp.	211 North Second
Meco-Lectro Products Inc.	120 York
Prairie Farms Dairy Inc.	2323 Broadway
Northeast corner except on 6th	Sixth and Chestnut
Heintz Electric Co.	York Street from a point 20' east of Tenth to a point 44' east

20.506 <u>Fire lanes</u> --- There shall be no parking at any time:

Street	Side of Street	Between
Fourteenth	West & East	Maine and Jersey
Fourteenth	East	Broadway and Vermont

Fourteenth	West	Maine and a point 100' north
Fourteenth	East	Maine and a point 100' south
Eighteenth	East	State and Locust
Eighteenth	West	Vermont and a point 80' north thereof and between Vermont and a point 50' south
Eighteenth	West	Broadway and point 150' south
Eighteenth	West	Broadway and point 150' north
Eighteenth	West	Broadway and an alley between Broadway and Spring
Eighteenth	West	Commencing 20' south of the southwest corner of Spring and Eighteenth Streets and continuing south for 160'
Eighteenth	West	Lind and a point 50' north and south
Eighteenth	West	Elm and a point 50' north and south
Eighteenth	West	A point 88' north of Vermont and point 40' north
Eighteenth	West	South side of the east/west alley between Chestnut and Lind to 30’ south of College Avenue.
Eighteenth	West	Commencing 325’ north of the north curb line of the west leg of Seminary Road and extending north to Quintron Way
Eighteenth	East	Commencing 400’ north of the north curb line of the west leg of Seminary Road and extending north to Quintron Way
Twenty-fifth	West	Maine and Broadway
Twenty-fifth	West	Broadway to a point 30' north
Twenty-fifth	East	Broadway to a point 30' south
York	North	Front and Eighth
Twelfth	East	Harrison to south city limits
Twelfth	West	The alley between Maine and Jersey and a point 140' south of the centerline of Spring
Twelfth	East	Jackson to a point 120' south
Twelfth	West	Jackson to a point 30' south of fire station drive
Twelfth	East	Jersey and Locust
Twelfth	West	Jefferson and a point 230' north; also Jefferson and a point 270' south
Twelfth	East	Jefferson and a point 270' north; also Jefferson and a point 270' south
Twelfth	West	North entrance to South Park and a point 150' south of said north entrance
Twelfth	West	Locust and a point 290' south
Twelfth	West	The centerline of Chestnut and a point 125' north
Twelfth	West	The centerline of Chestnut and a point 205' south
Twelfth	West	A point 260' north of centerline of State extending south to a 250' south of centerline of State

Twelfth	West	Commencing at Oak and extending south to a point 113' south of curb line of Oak
Twelfth	East	A point 279' north of centerline of State extending south to a point 250' south of centerline of State
Twelfth	East	Commencing at the entrance to Trailer Town Mobile Home Park extending north 20' and south 40'
Hampshire	North & South	An alley between Second and Third to a point 120’ west
Thirtieth	West	Whewell Avenue to a point 100' south
Thirtieth	East	Lindell and driveway to Moorman Mfg.
Thirtieth	East & West	80' south to 400' north of intersection of Thirtieth and State
Thirtieth	West & East	Broadway and a point 130' south
Thirtieth	East	Broadway and a point 130' north
Thirtieth	East & West	Oak and Vermont
Thirtieth	East	Maine to south property line of school
Vermont	North	Ninth and driveway on north side into parking lot
Vermont	North	Tenth to a point 40' west
Vermont	South	Seventh and a point 45' west
Vermont	South	Fourteenth and a point 60' west
Vermont	North	Fourteenth and a point 90' west
Vermont	North	A point 163' west of Fourth and a point 25' west
Twenty-fourth	East	Harrison and Locust
Twenty-fourth	West	Broadway to Vermont
Twenty-fourth	West	Maine and a point 100' north
Cedar	South	Twenty-fourth to a point 100' west
Cedar	North & South	Twenty-seventh to Titan Wheel parking lot
Cedar	North	Between a point on the east line of Twenty-seventh to a point 30’ east of the north line of Cedar
Cedar	South	Twenty-seventh to Twenty-eighth
Third	East	Fire hydrant between Maine and Hampshire and south to Maine
Third	West	Maine to alley south
Third	East	North curb line of Hampshire and a point 100' north
Third	West	South curb line of Vermont and a point 120' south
Third	West	Vermont and a point 80' north
Third	East	York and point 7-1/2' north of the fire hydrant on the east side of Third between York and Maine
Third	East	South curb line of Oak and a point 60' south
Second	East	Vermont and a fire hydrant to the south
Second	East	Hampshire and Vermont for 60' south from fire hydrant and a like distance from the west
Second	East	York and Kentucky
Second	West	York and 40' south

Second	West	A point 117' north of Maine to a point 262' north of Maine
Tenth	West	Payson a point 80' south
Tenth	East	A point 74' north of the northeast corner of Tenth and Broadway and a point 196' north of the northeast corner of Tenth and Broadway
Tenth	West	A point 20' north of Broadway and a point 50' north
Tenth	South	Chestnut and a point 40' west
Tenth	West	For a distance of 45' from alley between Spring and Oak that runs from Ninth to Tenth
Maine	South	Twelfth and a point 120' west
Maine	North	Twelfth and a point 140' east
Maine	North	Fourteenth and a point 100' east
Maine	South	Fourteenth and a point 100' west
Maine	North	East curb line of Eighth and extending east 43'
Maine	South	East curb line of Eighth and extending east 57'
Maine	South	West curb line of Eighth and extending west 53'
Maine	North & South	640’ west of the centerline of Thirty-sixth to Forty-eighth
Maine	North & South	Memorial Bridge and Third except South 20' west of Second to 50' east of the Memorial Bridge
Maine	South	A point 242' east of the centerline of Sixth extending east 100'
Maine	North	A point 182' east of the centerline of Sixth extending east 72’
Maine	South	A point 108' east of the centerline of Fifth extending east 96’
Maine	North	A point 154' west of the centerline of Sixth extending west 80’
Kentucky	South	Sixth and a point 100' west
High	South	Twenty-fourth and Twenty-fifth
Eighth	West	Van Buren south to city limits
Eighth	East & West	A point 215' south of the centerline of Broadway a point 170’ north of the centerline of Broadway
Eighth	East	Elm and Lind
Eighth	East	A point 48' south of Hampshire and point 60' south
Eighth	East & West	Oak and a point 40' north
Eighth	East & West	Oak and a point 40' south
Eighth	West	Jersey to the alley north
Eighth	West	Jefferson and a point 100' north
Eighth	East	Jefferson and a point 100' south
Eighth	West	York and a point 65' south
Eighth	East	100' south of Payson Avenue
Eighth	West	50' north of Payson Avenue

Eighth	West	A point 55' north of the centerline of State and a point 175' south of the centerline of State
Eighth	East	A point 283' north of the centerline of State and a point 143' south of the centerline of State
Eighth	West	North curb line of Maine and extending north 147'
Eighth	East	North curb line of Maine extending north 121'
Eighth	West	South curb line of Maine extending south 40'
Eighth	East	South curb line of Maine extending south 150'
Twenty-seventh	East	Broadway and Vermont
Sixteenth	East	Broadway and State
Sixteenth	West	Broadway and Vermont
Sixteenth	East	Locust and a point 320' north
Sixteenth	East	Center and Wells (except from 8:00 am Saturday to 12:00 midnight Sunday)
Sixth	East	York and a point 60' north
Sixth	West	Alley between Maine & Jersey and point 18’ south
Sixth	West	20' south of the south curb line of Broadway and a point 70' north of the north curb line of Broadway
Sixth	East	125' south to 25' north of the intersection of Sixth and Broadway
Sixth	West	York and a point 120' south
Sixth	West	York and a point 39' north
Sixth	West	Jersey and a point 100' north
Sixth	East	North side of the alley between Maine and Hampshire extending north 24'
Monroe	North	Twenty-fourth and Twenty-Eighth
Lind	South	Eighth and Ninth
Lind	South	Eighteenth and a point 265' east
Lind	North	A point 167' east of 18th and extending to a point an additional 143' east
Fourth	East	Chestnut to a point 80' south
Fourth	West	Chestnut to a point 80' south
Fourth	East & West	Locust and Maple
Fourth	East	Jersey and a point 85' north
Fourth	West	North curb line of Maine Street to a point 69' north
Fourth	East	A point 84' south of the south curb line of Vermont and a point 20 ' south
Locust	North	Third and Twenty-fourth
Locust	South	Twelfth and a point 150' west
Locust	South	Twelfth and a point 224' west of the west curb line of Twelfth
Locust	South	Tenth and Twelfth across from each drive of the fire station for a distance of 66' east of the west edge of the east drive and for a distance of 71' west of the east edge of the west drive

Locust	South	Twenty-fourth and a point 405' west of the centerline of Twenty-fourth
Locust	South	Intersection of Eighteenth extending 150' east of the intersection and 110' west of the intersection
Locust	North & South	Twenty-fourth and a point 1150’ east of centerline of Twenty-fourth
Fifth	West	Ohio to a point 50' south
Fifth	East	A point 100' north of the northeast corner of Fifth and Jersey and a point 140' north of said northeast corner of Fifth and Jersey
Fifth	West	100' south of State
Fifth	East	North property line of the "Hinkamper Service Co.” and Scenic Drive
Fifth	East	Gardner Park Drive and the railroad tracks
State	North	Last driveway of TCBY west of Eighteenth extending 20' west
State	South	A point 168' west of the centerline of Eighth and a point 240' east of the centerline of Eighth
State	North	A point 183' west of the centerline of Eighth and a point 163' east of the centerline of Eighth
State	South	A point 153' west of centerline of Twelfth extending west to a point 267' west of the centerline of Twelfth
State	South	Centerline of Twelfth and a point 266' east
State	North	A point 267' west of centerline of Twelfth and extending east to a point 266' east of the centerline of Twelfth
Broadway	North & South	Third Street east to Corporate City Limits of the City of Quincy
Chestnut	North	Commencing at a point 128' west of the centerline of Twenty-fourth and extending east to a point 80' east of the centerline of Twenty-fourth
Chestnut	South	Commencing at a point 482' west of the centerline of Twenty-fourth and extending east to a point 500' east of the centerline of Twenty-fourth
Chestnut	North	Tenth and a point 50' east
Chestnut	North	A point 223' west of the centerline of Twelfth and a point 227' east of the centerline of Twelfth
Chestnut	South	A point 247' west of the centerline of Twelfth and a point 59' east of the centerline of Twelfth
Chestnut	South	A point 90' west of Twentieth to the west curb line of Twentieth
Gardner Exp.	West	Jersey and a point 115' north
Gardner Exp.	East & West	A point 156' north of York and a point 42' north

Thirty-sixth	East & West	470' south of centerline of State to 550’ north of the centerline of Broadway
Twentieth	East	Maine and Jersey
Spring	North	Twenty-fourth and a point 193' west
Spring	North	Commencing at a point 102' west of the west curb line of Third and extending to a point 90' west
Twenty-eighth	East & West	Cherry and Spruce
Oak	North	A point 10' west of the driveway serving Blessing Hospital and a point 10' east of said driveway
Oak	South	Commencing at Twelfth and extending west to a point 124' west of the west curb line of Twelfth
Jefferson	North	Eighth and a point 100' east & west
Jefferson	South	Eighth and a point 100' west
Jefferson	North	Twelfth and a point 200' west also Twelfth and a point 105' east
Jefferson	North	Twelfth and Sixteenth Street
Jefferson	South	Twelfth and a point 255' west also Twelfth and a point 200' east
Jefferson	North	Twentieth and 140' west
Jefferson	North	Front and Gardner Expressway
Jackson	North & South	Twelfth and a point 150' west
Jennifer Road	West	Entire Street
Seventh	West	60' north of the intersection of Seventh and State
Thirty-third	East & West	Maine and Broadway
R.J. Peters	North	East curb line of Gardner Expressway and a point 85' east
Washington	North & South	Front and the river
Front	East	Jefferson and Jersey
Front	West	Commencing at a point 192' south of Jersey and extending south to Jefferson
Harrison	North	Commencing at a point 568' east of east curb line of Twelfth and extending to the east 587'
Harrison	South	Twelfth and Twenty-fourth
Harrison	South	A point 119' west of the east right-of-way line of South Ninth to a point 189' west of the east right-of-way line of South Ninth
Alley (Stag Shop Avenue)	South	Eighth and Ninth Street, State and Kentucky Streets
Alley between Broadway & Spring, 5th & 6th	North & South	Sixth to a point 150' west of the center line of Sixth
Alley between 8th and 9th	South	Kentucky and State
Cherry Lane	North	From the East curb line of Twelfth to west curb line of Twenty-fourth

Each successive thirty minute period of violation will constitute a separate offense.

20.507 <u>Angle parking zones</u> --- Angle parking shall not be permitted in the city except as provided in Section 20.504 hereof and except on the following streets or parts of streets:

Streets	**Side of Street**	**Between**
Fifth	West	Maine and Hampshire
Fifth	East	Vermont and Broadway
Sixth	West	Vermont and Broadway
Vermont	North	Front to Second
Vermont	North	Second and Third
Vermont	North	Fifth and Sixth
Hampshire	South	Fourth and Fifth
Maine	North	Fourth and Fifth
Payson	North	Third and Fourth
Payson	North	Fourth and Fifth
Seventeenth	West	North curb line of Locust to a point 95' north
Seventeenth	East	North curb line of Locust to a point 203' north
York	South	Commencing at a point 72' east of the east curb line of Ninth and extending 81'east
Eleventh	West	A point beginning 425' south of the curb line of Jackson to a point 75' south
Eleventh	East	A point beginning 137' south of the curb line of Jackson to a point 398' south

Each successive hour of violation shall constitute a separate offense.

20.508 <u>School no parking zones</u> ---

(1) It is unlawful to park between the hours of 8:00 a.m. and 4:00 p.m. on Mondays through Fridays from September 1st to June 1st of each year hereafter:

Streets	**Side of Street**	**Between**
Twelfth	East	Maine and 277' south
Fourteenth	West	Jersey and alley to south
Fourteenth	East	Jersey and a point 60' north
Maine	South	Twenty-fifth and a point 100' east of Twenty-fourth
Maine	North & South	50' east and west of Twenty-fifth
College Ave.	South	A point 145' west of Eighteenth and a point 240' west of Eighteenth
Glendale	East & West	State and South Glendale
Baldwin Dr.	Both	Entire Street

Tenth	East & West	50' north and south of Spruce
Tenth	East	Spruce and a point 100' south
Thirtieth	East & West	50' north and south of Lindell
State	North & South	50' east and west of Ninth
Eighteenth	West	50' north and south of College
Twelfth	West	50' north and south of Spruce
Twentieth	East	A point 89' north of Jefferson and a point 201' north of Jefferson
Twenty-first	West	Jefferson and Washington
Jefferson	North & South	50' north and south of Lindell
Jefferson	North & South	Ninth and 50' east, and Ninth and 50' west
Eighth	East & West	50' north and south of Sycamore
Eighth	East	A point 120' north of Sycamore and a point 188' north of Sycamore
Eighth	East	Commencing at VanBuren and extending north to the alley
Payson Ave.	North	Ninth and a point 283' west
Cherry	South	A point 205' west of Twenty-second and a point 335' west of Twenty-second
Ninth	West	North curb line of Payson Ave. and point 155' north
Twenty-fifth	East	Three parking spaces north of Maine
Lindell Ave.	North	Crestview Drive and extending west to the beginning of the indented parking in front of Ellington School

(2) It is unlawful to park between the hours of 11:30 a.m. and 12:45 p.m. on school days only on the following streets:

Street	**Side of Street**	**Between**
College	North & South	A point 60' west of Seventeenth to the intersection with Eighteenth
Seventeenth	East & West	One-half block north and south of the intersection with College

(3) That all parking in the Glendale Subdivision be restricted to 2-hour parking 8:00 a.m. to 4:00 p.m. Monday through Friday, September 1st to June 1st.

(4) It is unlawful for any vehicle excerpt school busses or other vehicles duly authorized to carry school children to park on the north side of Jefferson between 20th and 21st Streets between the hours of 8:00 a.m. and 4:00 p.m. on Mondays through Fridays from September 1st to June 1st of each year hereafter.

(5) It is unlawful to park between the hours of 7:00 a.m. to 4:00 p.m., on school days only, Mondays through Fridays, from September 1st to June 1st.

Street	Side of Street	Between
Jersey	North	Twelfth and Fourteenth
Kentucky	South	Commencing at a point 85' east of the east curb line of Eighth extending east 143'
Hamp-shire	South	Commencing at a point 42' west of the west curb line of Twenty-fifth and extending 262' west
VanBuren	North	Commencing at a point 98' east of the east curb line of Eighth and extending east 130'

(6) It is unlawful for any vehicle except school busses or other vehicles duly authorized to carry school children to park on the north side of Sycamore between Eighth and a point 193' east thereof, between the hours of 7:30 a.m. to 3:30 p.m. on Mondays through Fridays from September 1st to June 1st of each year hereafter.

Each successive hour of violation shall constitute a separate offense.

20.509 Parking at curb --- No vehicle shall be placed with the left side of such vehicle at the curb except on the left hand side of one-way streets and it shall be unlawful to stand or park any vehicle in a street other than parallel with the curb and with the two closest wheels of the vehicle within twelve inches of the regular established curb line or edge of pavement, except upon those locations which have been designated for angle parking, in which instance vehicles shall be parked at the curb at the angle indicated by street markings.

20.510 Painted parking lines --- It shall be unlawful to park any vehicle across any line painted on the curb or street for the purpose of designating a parking space so that the vehicle shall not be entirely within the area so designated by such lines or markings.

20.511 Vehicles for Sale, Repair or Storage ---

(1) It shall be unlawful for any person or business entity regularly engaged in the sale of automobiles to park any vehicle upon any street, alley, sidewalk or parkway for the purpose of displaying it for sale.

(2) It shall be unlawful for any individual not regularly engaged in the sale of automobiles to park any vehicle displaying a "For Sale" sign, or other evidence of the vehicle's availability for sale on any public right-of-way for a cumulative period in excess of twelve (12) hours per seven (7) day period, unless such vehicle is properly parked upon a public right-of-way immediately adjoining or abutting the owner's place of residence or employment.

(3) It shall be unlawful to park a motor vehicle on a public right-of-way for the purpose of repairing, altering or performing maintenance upon such motor vehicle, except for emergency repairs occasioned by the operation of the vehicle on the public right-of-way.

(4) It shall be unlawful for any person to maintain a motor vehicle, trailer or container on a public right-of-way as a storage facility. For purpose of this subsection, a vehicle, trailer or container is a storage facility if it is in a stationary position on a public right-of-way loaded with any of the same contents for a cumulative period of fourteen (14) days in any thirty (30) day period.

20.512 **<u>No parking zones, general</u>** --- Subject to the provisions of section 20.502 hereof, it shall be unlawful for the driver of a passenger vehicle to stand such vehicle for longer than is necessary to load or unload passengers, and in no event to exceed one (1) minute, or for the driver to stand any freight carrying vehicle for a period of time longer than is absolutely necessary to actually load, or unload materials:

(1) In any public alley, during any hour of the day or night so as to reduce the useable width of the alley to less than 10’.

(2) At any place along the curb before the entrance to a public building.

(3) At any place along the curb before the entrance to any hospital or hotel.

(4) Directly in front of the entrance to any theater at any time the theater is open for business.

(5) Within 30’ of a traffic signal or stop sign on the approaching side.

(6) Within 20’ of any crosswalk.

(7) At any curb within15’ of a fire hydrant.

(8) At any place where the vehicle would block the use of a driveway; or on any driveway into a public ground, place or building.

(9) At any place where official signs, or official yellow or red painted curb line or section of the street prohibit parking as provided in this Article.

(10) In any alley in the district bounded on the west by the east line of Third, on the east by the west line of Twelfth, on the south by the north line of York, and on the north by the south line of Broadway; and also that district bounded on the west by the east line of Eighth, on the east by the west line of Ninth, on the south by the north line of State, and on the north by the south line of Kentucky.

(11) At any place temporarily so designated by ordinance and posted by the Chief of Police or the Chief of the Fire Department.

(12) In any driveway or on any parkway or sidewalk except as provided in Section 20.504 hereof.

(13) On the Sixteenth Street side and the Hampshire Street side of the Unitarian Church. (Applies only on Sunday when appropriate signs are erected by church officials.)

(14) On the west side of Seventeenth Street between Jefferson and Madison Streets. (Applies only on Sunday when appropriate signs are erected by officials of the St. James Lutheran Church.)

(15) In the alley running east and west between College Avenue and Oak Street, between the hours of 12:00 o’clock noon and 1:00 p.m. on school days when appropriate barricades are erected.

(16) On the south side of Lind for a distance of 60’ east of Twenty-fourth on Sundays only.

(17) On the south side of Maine Street between a point 20' east of Twentieth Street and a point 20' east.

(18) On the north side of Holiday Drive between Thirty-sixth and a point 200' east thereof except on Sundays.

(19) On the east side of Second Street between Jersey and York.

(20) On the east and west sides of Ridgewood Drive, commencing at a point 50' north of the center of Curtis Creek extending to a point 150' south of the center of Curtis Creek.

(21) On the west side of Thirtieth Street commencing at Harrison Street extending south 250'.

(22) On the west side of Fourth Street commencing at Vermont Street extending south 195'.

(23) On the west side of Eighth Street, commencing 89' south of Maine Street, and extending south to the east/west alley between Maine Street and Jersey Street.

(24) On the west side of the north/south alley between Fourth and Fifth Streets, College and Oak Streets.

(25) On the east side of South Fifth Street, commencing 159' north of Kentucky Street and extending 60' therefrom, between the hours of 7:00 a.m. to 4:00 p.m.

(26) On both sides of R.J. Peters Drive between Twelfth Street and Gardner Expressway, except on those places specifically designated for parking.

(27) On the north side of Harrison Street, commencing at Eighteenth Street and extending east 70'.

(28) On the east side of Ninth Street, commencing at Lind Street and extending south to the alley.

(29) On the south side of Lind Street, commencing at Ninth Street and extending east 92'.

(30) On the east side of Highway 96, commencing at Prairie Ridge Road and extending south 60'.

(31) On the north side of Prairie Ridge Road commencing at Highway 96 extending east 90'.

(32) On the west side of Twelfth Street commencing at Lind Street and extending north 50'.

(33) On the west side of Twenty-fourth Street, commencing at a point 120' south of Hampshire Street and extending south to the east/west alley between Maine and Jersey.

(34) On the south side of Lindell Avenue commencing at Thirty-sixth Street and extending east 40'.

(35) On the east side of Eighth Street commencing at a point 50' south of VanBuren Street and extending north to a point 50' north of VanBuren.

(36) On the west side of Eighth Street commencing at VanBuren Street and extending north 50'.

(37) On the west side of Twelfth Street commencing at a point 315' north of Harrison Street and extending south to Cherry Lane.

(38) On the east side of Twelfth Street commencing at Harrison Street and extending north 315'.

(39) On the north and south sides of Harrison Street from Twenty-fourth Street to Curtis Creek Road.

(40) On the south side of State Street commencing at a point 477' west of the centerline of Carol Drive and extending east to a point 295' east of the centerline of Poinsettia Drive.

(41) On the east and west sides of Third Street between Chestnut and Cherry Streets.

(42) On the north side of Spring Street commencing at Eighth Street and extending east 76'.

Parking will be prohibited in stages as traffic counts warrant its removal.

(43) On the east side of Third Street commencing at Broadway and extending north 160’.

On the west side of Third Street commencing at Broadway and extending north 300';

On the east side of Third Street commencing at Broadway and extending south 100';
On the east side of Third Street commencing at Maine Street and extending north 100';
On the west side of Fourth Street commencing at Broadway and extending to Vermont;
On the east side of Fourth Street commencing at Broadway and extending south 230';
On the west side of Fourth Street commencing at Maine Street and extending north 140';
On the east side of Fourth Street commencing at Maine Street and extending south 100';
On the west side of Fourth Street commencing at Maine Street and extending south 90';
On both sides of Broadway commencing at Third Street and extending to Front Street.

---

(44) On the south side of Spring Street, commencing at a point 70' east of Second Street and extending east 80'.

(45) On the east side of Twenty-ninth Street between Broadway and Whewell Drive.

(46) On the south side of Whewell Drive between Twenty-ninth Street and Thirtieth Street.

(47) On the east and west sides of Twenty-seventh Street between Spruce Street and Cedar Streets.

(48) On the east and west sides of Eighth Street commencing at Jackson Street and extending north and south for 50'.

(49) On the west side of Eighteenth Street from a point 25' south of Oak Street and extending north to a point 100' north of Oak Street.

(50) On the north and south sides of Maine Street, commencing at Eighteenth Street and extending east and west 115'.

(51) On the west side of Eighteenth Street, commencing at Maine Street and extending south 255', and north 305'.

(52) On the south side of Delaware Street, commencing at a point 315' west of Fourth Street and extending west 20'.

(53) On the east side of Tenth Street, commencing at the centerline of Sycamore Street and extending 50' north and south of said centerline.

(54) On the east side of Eighteenth Street, commencing at Harrison Street and extending north 40'.

(55) On the west side of Fifth Street, commencing at a point 195' north of Payson Avenue and extending north 40'.

(56) On the north side of Maine Street, commencing at a point 305' west of the centerline of Thirtieth Street and extending to a point 210' east of the centerline of Thirtieth Street.

(57) On the south side of Maine Street, commencing at a point 305' west of the centerline of Thirtieth Street and extending to a point165' east of the centerline of Thirtieth Street.

(58) On the west side of Thirtieth Street, commencing at a point 255' north of the centerline of Maine Street and extending to a point 200' south of the centerline of Maine Street.

(59) On the east side of Thirtieth Street, commencing at the centerline of Maine Street and extending north 215'.

(60) On the north side of State Street commencing at a point 60' east of the centerline of Nineteenth Street and extending west 120’.

(61) On the north side of Lind Street, commencing at a point 365' east of Eighteenth Street and extending east 40'.

(62) On the south side of Locust Street commencing at Fourth Street and extending east 50'.

(63) On the south side of York Street commencing at Fourth Street and extending west 50'.

(64) In the alley running east and west between Third Street and Fourth Street, Maine Street and Jersey Street, the fourteenth parking stall from Third Street.

(65) South side of Locust Street commencing at the east curb line of Twelfth Street and continuing easterly for a distance of 250'.

(66) On the south side of Locust Street, commencing at the west curb line of Twelfth Street and continuing westerly for a distance of 400'.

(67) On both sides of Twelfth Street commencing at the north curb line of Locust Street and continuing north a distance of 375'.

(68) On the south side of Jersey Street commencing at the west curb line of Sixth Street and continuing west for a distance of 121'. Said space shall be used for the Quincy Public Library book return.

(69) On the north side of Chestnut Street from the east curb line of Fifth Street to a point 40' east.

(70) On the south side of Vermont Street between Fourteenth Street and Sixteenth Street.

(71) On the north side of Vermont Street between the west curb line of Sixteenth Street and a point 255' west.

(72) On the west side of Twenty-fourth Street between Harrison and VanBuren.

(73) On both sides (east/west) of the alley between Fourteenth and Fifteenth, Broadway to Spring Street.

(74) On the north side of Vermont Street between a point 295' west of the west curb line of Sixteenth Street and a point 325' west of the west curb line of Sixteenth Street.

(75) On the north side of Vermont Street commencing on the west edge of the driveway serving the Family Practice Center between Twelfth Street and Fourteenth Street and continuing west for a distance of 20'.

(76) On the south side of Maine Street, 20' on each side of the three (3) driveways serving St. Peter Catholic Church and School at or near the intersection of Twenty-fifth and Maine Streets.

(77) On the east side of Second Street commencing at a point 15' north of the driveway serving 630 North Second and continuing to a point 15' south of said driveway.

(78) On the south side of Jersey Street at the intersection with Fifth, one 20' parking stall west of said intersection.

(79) On the west side of Eighteenth Street beginning at the centerline of the dedicated alley between Locust and Wells a distance of 25' north and a distance of 25' south of said alley.

(80) On the east side of Fourth Street beginning at a point 92' south of the south curb line of Maine Street and extending south a distance of 20'.

(81) On the west side of Twelfth Street for a distance of 50' on each side of the alley running east and west located between Kentucky and York Streets.

(82) On the east and west sides of Thirty-ninth Street, beginning at the intersection with Columbus Road and continuing north to the intersection with Wavering Park.

(83) 40' of "No Parking" in front of the Unity Church at 929 Monroe on Sundays between the hours of 9:00 a.m. to 12:00 noon.(When appropriate signs are erected by church officials.)

(84) On the west side of Twenty-first Street, commencing at a point 190' north of the north curb line of Jefferson extending to a point 75' north.

(85) On the south side of Chestnut Street, commencing at a point 67' west of the west curb line of North Tenth Street and extending to a point 72' east of the east curb line of North Tenth Street.

(86) On the south side of Ohio Street, commencing at Fifth Street and extending to a point 67' east of the curb line of Fifth Street.

(87) On the east side of Eighth Street, commencing at Lind Street and extending to a point 40' north of the curb line of Lind Street.

(88) On the north side of Seminary Road, commencing at a point 175' east of the centerline of Twelfth Street and extending 70' east.

(89) On the north side of Seminary Road, commencing at a point 290' east of the centerline of Twelfth Street and extending 50' east.

(90) On the south side of Seminary Road, commencing at a point 182' east of the centerline of Twelfth Street and extending 63' east.

(91) On the north side of Seminary Road, commencing at a point 205' west of the centerline of Sixteenth Street and extending 95' west thereof between the hours of 7:00 a.m. and 5:00 p.m., Monday through Friday.

(92) On the south side of State Street, commencing at a point 240' east of the east curb line of Sixth Street and extending east 33'.

(93) On the south side of Hampshire Street between Front Street and Second Street, commencing at a point 205' east of the curb line of Front Street and extending 50' east.

(94) On the west side of South Fourteenth, commencing at the alley between Kentucky and Park Place and running north and south for a distance of 15’ in each direction.

(95) On the west side of South Eighth, commencing at the alley between Monroe and Adams and running north for a distance of 20'.

(96) On the northeast corner of the intersection of Glendale Drive and South Glendale Drive commencing at the fire hydrant and running east along the curb line for a distance of 35' from said hydrant.

(97) No parking along the north and south sides of Jersey Street, commencing at 5th Street and extending east 40'.

(98) On the north side of Maine Street, commencing at a point 190’ east of Ninth Street east to a point 225' east of Ninth Street.

(99) On the west side of Fourth Street, commencing at a point 48' north of the north curb line of Hampshire Street and extending to a point 94' north.

(100) On the east side of Twentieth Street, commencing at a point 148' north of the north curb line of Maine Street and extending to a point 54' north.

(101) It is unlawful to park between the hours of 11:00 a.m. to 1:00 p.m. on Mondays through Fridays from August 15th to June 15th on the west side of Eighteenth Street between College and a point 150' south.

(102) On the west side of Twelfth Street between Jackson Street and a point 125' north.

(103) On the south side of Locust Street between Eighth Street and a point 40' west.

(104) On Maine Street between Seventh and Eighth Streets, commencing at a point 139' west of the west curb line of Eighth and extending to a point 114' west.

(105) No parking along the east and west side of Fourth Street, commencing at Chestnut and extending south to point 133' south of the centerline of Chestnut; no parking along the east side of Fourth Street, commencing at Chestnut and extending north to a point 70' north of the

centerline of Chestnut; no parking along the north side of Chestnut, commencing at Fourth Street and extending west to a point 62' west of the centerline of Fourth Street; no parking along the south side of Chestnut, commencing at Fourth Street and extending east to a point 73' east of the centerline of Fourth Street.

(106) On the east and west side of Eighth Street, commencing at a point 50' south of Adams Street and extending to a point 50' north of Adams.

(107) On the west side of North Twenty-fifth Street, commencing at the intersection of Broadway and extending to a point 20' north of Broadway.

(108) On the south side of Hampshire Street at the intersection of Twentieth Street and extending east two (2) parking spaces; and for a distance of 5' on each side of the driveway located on Twentieth Street to the residence located at 2001 Hampshire.

(109) On the east side of Twentieth Street at the intersection of Maine and extending north two (2) parking spaces.

(110) On the north side of Oak Street, commencing at a point 167’ east of the east curb line of Tenth Street and extending 122’ east thereof (exit to Blessing Hospital Parking Lot).

(111) On the east and west sides of Tenth Street, commencing at a point 40’ north of Oak Street and extending to a point 40’ south of Oak Street.

(112) On the west side of Twelfth Street between Lind Street and a point 40' south.

(113) On the south side of Jackson Street, commencing at a point 30' west of the west curb line of Tenth Street and extending to a point 216' east.

(114) On the north and south sides of the alley between Chestnut and Cherry, Eleventh and Twelfth, commencing at the west curb line of Twelfth and extending west a distance of 100'.

(115) In front of 1019 South Fifth Street.

(116) On the west side of Tenth Street, commencing at a point 172' south of the south curb line of Broadway and extending south 30'.

(117) On the south side of Hampshire Street beginning at a point just east of the exit from the Quincy Medical Group Clinic and extending 20'.

(118) On the south side of Oak Street beginning at the east curb line of Third and extending east 100' between the hours of 8:00 a.m. and 5:00 p.m.

(119) Commencing at a point 123' south of the south curb line of Broadway and extending south a total of 66' on the west side of Fifth Street.

(120) On the west side of Ninth Street, 10' north and south of Washington School's driveway, commencing at a point 77' north of Sycamore Street and extending north a distance of 39'.

(121) On the north side of Jersey Street, commencing at the west curb line of Fourteenth Street and extending west a distance of 71'.

(122) On the west side of Eleventh Street, commencing at a point 56' south of the south curb line of Vermont Street and extending south a distance of 66'.

(123) On the north side of Hampshire Street, commencing at Eighth Street and extending west to a point 55' west of the west curb line of Eighth Street.

(124) On the west side of Eighth Street, commencing at Hampshire Street and extending south to a point 52’ south of the south curb line of Hampshire Street.

(125) On the south side of Hampshire Street, commencing at Sixth Street and extending west to a point 55' west of the west curb line of Sixth Street.

(126) On the north side of Chestnut Street, commencing at a point 118' west of the west curb line of Twentieth Street and extending to a point 132' west.

(127) On the south side of Lindell Avenue, commencing at a point 288' east of the east curb line of Thirtieth Street and extending east 12’.

(128) On the south side of Oak, commencing at a point 217' east of the east curb line of Tenth Street and extending to a point 100' west.

(129) On the north side of Lind Street, commencing at the north side of the driveway to 918 North Eighteenth Street and extending north a distance of 15'.

(130) On the north side of Harrison Street, commencing 62' west of the centerline of Harrison Plaza to 77' east of the centerline of Harrison Plaza.

(131) On the south side of Harrison Street, commencing 101' west of the centerline of Thirtieth Street to 77' east of the centerline of Thirtieth Street.

(132) On the north side of Harrison Street, commencing 87' west of the centerline of Thirtieth Street to 86' east of the centerline of Thirtieth Street.

(133) On the north side of Harrison Street, commencing 67' west of the centerline of Fox Run West to 100' east of the centerline of Fox Run West.

(134) On the east side of Thirtieth Street, commencing at the south curb line of Harrison Street to a point 110' south.

(135) On the west side of Thirtieth Street, commencing at the south curb line of Harrison Street to a point 274' south.

(136) On the south side of Maine Street, commencing at the west end of the driveway at 1840 Maine and extending west 20' feet.

(137) On the north side of College, commencing at Twenty-eighth Street and extending east to a point 30' east of the curb line of Twenty-eighth Street.

(138) On the west side of Tenth Street, commencing at Spring Street and extending north to the alley.

(139) (Reserved)

(140) Third Street, east and west sides, commencing at Riverview Street northerly to the north abutment of the structure over Cedar Creek and the BNSF Railroad.

(141) US 24, both sides, from the north abutment of the structure over Cedar Creek and the BNSF Railroad northeasterly to 206.48 meters east of the eastern intersection of US 24 with IL 96.

(142) IL 96, both sides, from the centerline of US 24 at the eastern intersection of US 24 with IL 96 northerly 594.219 lineal meters.

(143) Fourth Street (US 24), both sides, from 5.815 meters (17.01’) north of the centerline of Locust Street northerly to the intersection with Third Street and Gardner Park Road.

(144) Maine, north side, commencing at a point 120’ east of the east curb line of Tenth Street and extending 144’.

(145) On the north side of the alley from Ninth Street to Tenth Street between Jackson and VanBuren Streets.

(146) East side of Front Street from the south curb on Hampshire to a point 120’ south.

(147) On the east and west sides of the north/south alley between Front Street and Second Street, Maine and Hampshire.

(148) On the east and west sides of the alley between Front Street and Second Street, Hampshire and Vermont, commencing at Hampshire and extending to a point 315' north of the north curb line of Hampshire.

(149) Ninth Street, east side, commencing at a point 229' south of the south curb line of Vermont Street and extending 15' south.

(150) Oak Street, south side, between Eleventh Street and Twelfth Street, commencing at the west curb line of the parking lot entrance to Blessing Hospital and extending 15' west.

(151) Oak Street, south side, between Eleventh Street and Twelfth Street, commencing at the east curb line of the parking lot entrance to Blessing Hospital and extending 15' east.

(152) Twentieth Street, west side, between Chestnut Street and the alley between Elm and Lind Streets.

(153) Twentieth Street, west side, between Chestnut Street and the alley between Elm and Lind Streets.

(154) Locust Street, south side, commencing at a point 205 feet east of the centerline of Eighteenth Street and extending west to a point 269 feet west of the centerline of Eighteenth Street.

(155) Eighteenth Street, west side, commencing at a point 262 feet south of the centerline of Locust Street and extending north to a point 279 feet west of the centerline of Locust Street.

(156) Eighteenth Street, east side, commencing at Locust Street and extending north to a point 435 feet north of the centerline of Locust Street.

20.513 <u>Taxicab parking</u> --- It shall be unlawful for more than two taxicabs of the same company to stand unattended in the same block on streets regulated by Section 20.602, Article VI (Uptown Parking), Chapter 20, of this Code, during the hours not in operation, except between the hours of 10:30 p.m. and 7:30 a.m. Each successive hour of violation shall constitute a separate offense.

20.514 <u>Cab stands - bus stands</u> ---

(1) No vehicle other than a licensed taxicab shall be parked in any area designated by ordinance as a taxicab stand; and no vehicle other than a bus shall be parked in a place so designated as a bus loading zone.

(2) Zones for stopping, loading or unloading of buses shall be established at the following places:

<u>DOWNTOWN</u>

7th and Broadway	SW corner 40' west of 7th on Broadway
7th and Broadway	NE corner 40' east of 7th on Broadway
6th and Broadway	NE corner 40' east of 6th on Broadway
6th and Broadway	SW corner 40' west of 6th on Broadway
5th and Broadway	SW corner 50' south of Broadway on 5th
5th and Broadway	SE corner 50' south of Broadway on 5th
5th and Broadway	NE corner 40' north of Broadway on 5th
5th and Vermont	SE corner 50' south of Vermont on 5th
5th and Vermont	NW corner 40' north of Vermont on 5th

5th and Hampshire	NW corner 50’ north of Hampshire on 5th
5th Street	East side commencing at a point 238’ north of the centerline of Maine extending north 54'
5th and Maine	South side commencing at a point 62’ east of the centerline of 5th extending east 45.6’
6th and Maine	North side commencing at a point 60' west of the centerline of 6th extending west 93'
6th and Maine	South side commencing at a point 68' east of the centerline of 6th extending east 105’
7th and Maine	North side commencing at a point 33’ west of the centerline of 7th extending west 37'
8th and Maine	SW corner 60' south of Maine on 8th
8th and Maine	NW corner 63’ west of 8th on Maine
8th and Maine	SE corner 45’ east of 8th on Maine
8th and Jersey	SE corner 40' south of Jersey on 8th
8th and York	SE corner 40’ south of Jersey on 8th
8th and Kentucky	SE corner 40' south of Kentucky on 8th
8th and State	NE corner 75' north of State on 8th
8th and State	SE corner 40' east of 8th on State

SOLDIER’S HOME

5th and Spring	SE corner 40' south of Spring on 5th
5th and Spring	NW corner 40’ north of Spring on 5th
5th and Oak	NW corner 40’ north of Oak on 5th
5th and Oak	SE corner 40' south of Oak on 5th
5th and College	SE corner 40' south.of College on 5th
5th and College	NW corner 40' north of College on 5th
5th and Elm	NW corner 40' north of Elm on 5th
5th and E1m	SE corner 40' south of Elm on 5th
5th and Lind	SE corner 40’ south of Lind on 5th
5th and Lind	NW corner 40’ north of Lind on 5th
5th and Chestnut	NW corner 40’ north of Chestnut on 5th
5th and Chestnut	SE corner 40' south of Chestnut on 5th
5th and Cherry	SE corner 40' south of Cherry on 5th
5th and Cherry	NW corner 40' north of Cherry on 5th
5th and Cedar	NW corner 40' north of Cedar on 5th
5th and Cedar	SE corner 40’ south of Cedar on 5th
5th and Spruce	SE corner 40' south of Spruce on 5th
5th and Spruce	NW corner 40' north of Spruce on 5th
5th and Sycamore	SE corner 40’ south of Sycamore on 5th
5th and Sycamore	NW corner 40' north of Sycamore on 5th
5th and Maple	NW corner 40’ north of Maple on 5th
5th and Locust	SW corner 40’ south of Locust on 5th

6th and Sycamore	SW corner 40’ west of 6th on Sycamore
7th and Sycamore	SW corner 40' west of 7th on Sycamore
8th and Sycamore	SW corner 40' west of 8th on Sycamore
9th and Sycamore	SW corner 40' west of 9th on Sycamore
10th and Sycamore	SW corner 40' west of 10th on Sycamore
10th and Spruce	SE corner 40' east of 10th on Spruce
11th and Spruce	SW corner 40' west of 11th on Spruce
12th and Spruce	SW corner 40' west of 12th on Spruce
13th and Spruce	SW corner 40' west of 13th on Spruce
14th and Spruce	SW corner 40' west of 14th on Spruce
15th and Spruce	SW corner 40' west of 15th on Spruce
16th and Spruce	SW corner 40' west: of 16th on Spruce
17th and Spruce	SW corner 40' west of 17th on Spruce
18th and Spruce	SW corner 40' west of 18th on Spruce
18th and Sycamore	SE corner 40’ south of Sycamore on 18th
18th and Maple	SE corner 40’ south of Maple on 18th
18th and Locust	SE corner 40' south of Locust on 18th
17th and Locust	NE corner 40' east of 17th on Locust
12th and Locust	SW corner 40` west of 12th on Locust
8th and Locust	NW corner 40' east of 8th on Locust

INDIAN MOUNDS

8th and Ohio	SE corner 40' south of Ohio on 8th
8th and Ohio	NW corner 40' north of Ohio on 8th
8th and Payson	NE corner 40' north of Payson on 8th
8th and Payson	NW corner 40' north of Payson on 8th
8th and Washington	SE corner 40' south of Washington on 8th
8th and Washington	NW corner 40’ north of Washington on 8th
7th and Washington	NE corner 40’ east of 7th on Washington
6th and Washington	NE corner 40' east of 6th on Washington
5th and Washington	NE corner 40' east of 5th on Washington
5th and Jefferson	NW corner 40’ north of Jefferson on 5th
6th and Jefferson	SW corner 40’ west of 6th on Jefferson
6th and Madison	NW corner 40' north of Madison on 6th
6th and Monroe	NW corner 40' north of Monroe on 6th
6th and Adams	NW corner 40' north of Adams on 6th
5th and Adams	NE corner 40' east of 5th on Adams
5th and Jackson	NW corner 40' north of Jackson on 5th
5th and Van Buren	NW corner 40' north of Van Buren on 5th
5th and Harrison	NW corner 40' north of Harrison on 5th
5th and Harrison	SE corner 40' east of 5th on Harrison
6th and Harrison	40' west of east curb line of 6th on south side of Harrison

7th and Harrison	40' west of east curb line of 7th on south side of Harrison
8th and Harrison	SW corner 40' west of 8th on Harrison
8th and Van Buren	NE corner 40' north of Van Buren on 8th
8th and Jackson	SE corner 40' south of Jackson on 8th
8th and Adams	SE corner 40' south of Adams on 8th
8th and Monroe	SE corner 40' south of Monroe on 8th
8th and Madison	SE corner 40' south of Madison on 8th
8th and Jefferson	NE corner 40' north of Jefferson on 8th

BALDWIN

9th and Maine	SW corner 40' west of 9th on Maine
9th and Maine	NE corner 40' east of 9th on Maine
10th and Maine	NE corner 40' east of 10th on Maine
10th and Maine	SW corner 40' west of 10th on Maine
11th and Maine	SW corner 40' west of 11th on Maine
11th and Maine	NE corner 40' east of 11th on Maine
12th and Maine	NE corner 40' east of 12th on Maine
12th and Maine	NE corner 40' north of Maine on 12th
12th and Maine	SW corner 40' west of 12th on Maine
13th and Maine	40’ east of light pole on south side of Maine
13th and Maine	40' west of light pole on north side of Maine
14th and Maine	SE corner 52' east of 14th on Maine
14th and Maine	NW corner 40' west of 14th on Maine
15th and Maine	40' east of fireplug on south side of Maine
15th and Maine	40' west of fireplug on north side of Maine
16th and Maine	SW corner 40' west of 16th on Maine
16th and Maine	NE corner 40' east of 16th on Maine
17th and Maine	40' east of light pole on south side of Maine
17th and Maine	40' east of light pole on north side of Maine
18th and Maine	SW corner 40' west of 18th on Maine
18th and Maine	NE corner 40' east of 18th on Maine
19th and Maine	40' east of light pole on south side of Maine
19th and Maine	40' east of light pole on north side of Maine
20th and Maine	SW corner 40' west of 20th on Maine
20th and Maine	NE corner 40' east of 20th on Maine
21st and Maine	SW corner 40' west of 21st on Maine
21st and Maine	40' east of east curb line of 21st on Maine
22nd and Maine	40' west of light pole on south side of Maine
22nd and Maine	NE corner 40' east of 22nd on Maine
23rd and Maine	SW corner 40' west of 23rd on Maine
23rd and Maine	40' east of curb line of 23rd on south side of Maine

24th and Maine	SW corner 40' west of 24th on south side of Maine
24th and Maine	NW corner 40' north of Maine on 24th
25th and Maine	40' west of west curb line of 25th on south side of Maine
26th and Maine	40' west of light pole on south side of Maine
27th and Maine	40' west of light pole on south side of Maine
28th and Maine	40' west of light pole on south side of Maine
29th and Maine	40' west of light pole on south side of Maine
30th and Maine	SW corner 40' west of 30th on Maine
30th and Hampshire	SW corner 40' south of Hampshire on 30th
30th and Broadway	SW corner 40' south of Broadway on 30th
36th and Broadway	K-Mart Store
36th & Columbus Road	NW corner 40' west of 36th on Columbus Rd
33rd and Broadway	Quincy Mall (3 stops behind mall)
30th and Whewell	40' south of south curb line of Whewell on east side of 30th
30th and College	40' south of south curb line of College on east side of 30th
29th and College	40' east of light pole on north side of College
28th and College	NE corner 40' east of 28th on College
28th and Oak	NW corner 40' north of Oak on 28th
28th and Spring	40' north of light pole on west side of 28th
28th and Broadway	NW corner 40' north of Broadway on 28th
27th and Broadway	SW corner 40' south of Broadway on 27th
27th and Vermont	NW corner 40' north of Vermont on 27th
26th and Vermont	40' east of light pole on north side of Vermont
25th and Vermont	NE corner 40' east of 25th on Vermont
24th and Vermont	NE corner 50' east of 24th on Vermont
24th and Hampshire	40' north of Hampshire on 24th

WALTON

24th and Chestnut	SE corner 99' east of 24th extending 50' further east on Chestnut
26th and Chestnut	SW corner 40' west of 26th on Chestnut
27th and Chestnut	SW corner 40' west of 27th on Chestnut
28th and Chestnut	NE corner 50' north of Chestnut on 28th
28th and Cherry	50' south of fireplug on east side of 28th
28th and Cedar	60' north of Cedar on west side of 28th
28th and Cedar	50' west of 28th on north side of Cedar
27th and Cedar	NE corner 40' east of 27th on Cedar
26th and Cedar	NE corner 40' east of 26th on Cedar
25th and Cedar	NE corner 40' east of 25th on Cedar
24th and Cedar	NE corner 40' east of 24th on Cedar

24th and Spruce	NE corner 40’ north of Spruce on 24th
24th and Sycamore	NE corner 40' north of Sycamore on 24th
24th and Locust	NW corner 40' west of 24th on Locust
22nd and Locust	SW corner 40' south of Locust on 22nd
22nd and Maple	SW corner 40' south of Maple on 22nd
22nd and Sycamore	SW corner 40' south of Sycamore on 22nd
22nd and Spruce	NW corner 40' north of Spruce on 22nd
22nd and Cedar	NW corner 40' north of Cedar on 22nd
22nd and Cherry	NW corner 40' north of Cherry on 22nd
22nd and Chestnut	NW corner 40' north of Chestnut on 22nd
22nd and Chestnut	SW corner 40' west of 22nd on Chestnut
23rd and Chestnut	40' west of street light on south side of Chestnut
21st and Chestnut	40' east of street light on north side of Chestnut
21st and Chestnut	40' east of street light on south side of Chestnut
20th and Chestnut	NE corner 50' east of 20th on Chestnut
20th and Chestnut	SW corner 50' west of 20th on Chestnut
19th and Chestnut	In front of 1812 Chestnut
18th and Chestnut	NE corner 50' east of 18th on Chestnut
18th and Chestnut	SE corner 40' south of Chestnut on 18th
18th and Lind	NW corner 40' north of Lind on 18th
18th and Lind	SE corner 40' south of Lind on 18th
18th and Elm	NW corner 40' north of Elm on 18th
18th and Elm	SW corner 40' west of 18th on Elm
18th and Elm	East side of 18th south of Elm
17th and Elm	NE corner 40' west of 17th on Elm
17th and Elm	SW corner 40' west of 17th on Elm
16th and Elm	SW corner 40' west of 16th on Elm
16th and Elm	NE corner 40' east of 16th on Elm
15th and Elm	SW corner 40' west of 15th on Elm
15th and Elm	NE corner 40' east of 15th on Elm
14th and Elm	NE corner 40' east of 14th on Elm
14th and Elm	NW corner 40' west of Elm on 14th
13th and Elm	NE corner 40' west of 13th on Elm
13th and Elm	NW corner 40' north of Elm on 13th
13th and Lind	NW corner 40' north of Lind on 13th
13th and Lind	SE corner 40' south of Lind on 13th
13th and Chestnut	SE corner 40' south of Chestnut on 13th
13th and Chestnut	SW corner 40' west of 13th on Chestnut
12th and Chestnut	NE corner 40' east of 12th on Chestnut
12th and Chestnut	SW corner 40' west of 12th on Chestnut
11th and Chestnut	NE corner 40' east of 11th on Chestnut
11th and Chestnut	SE corner 40' south of Chestnut on 11th

11th and Lind	NE corner 40' north of Lind on 11th
11th and Lind	SW corner 40' west of 11th on Lind
10th and Lind	SW corner 50' west of 10th on Lind
10th and Lind	NE corner 50' east of 10th on Lind
9th and Lind	SW corner 40' west of 9th on Lind
9th and Lind	NE corner 40' east of 9th on Lind
8th and Lind	NE corner 50' east of 8th on Lind
8th and Lind	SE corner 40' south of Lind on 8th
8th and E1m	NW corner 40' north of Elm on 8th
8th and E1m	SE corner 40' south of Elm on 8th
8th and College	SE corner 40' south of College on 8th
8th and College	NW corner 40' north of College on 8th
8th and Oak	NW corner 40' north of Oak on 8th
8th and Oak	SE corner 40' south of Oak on 8th
8th and Spring	SE corner 40' south of Spring on 8th
8th and Spring	NW corner 40' north of Spring on 8th
8th and Broadway	NW corner 40' north of Broadway on 8th
8th and Broadway	NE corner 70' north of Broadway on 8th

BROADWAY

8th and Broadway	SW corner 40' west of 8th on Broadway
9th and Broadway	SW corner 40' west of 9th on Broadway
9th and Broadway	NE corner 40' east of 9th on Broadway
10th and Broadway	NE corner 40' east of 10th on Broadway
10th and Broadway	SW corner 40' west of 10th on Broadway
11th and Broadway	SW corner 40' west of 11th on Broadway
11th and Broadway	NE corner 40' east of 11th on Broadway
12th and Broadway	NE corner 40' east of 12th on Broadway
12th and Broadway	SW corner 40' west of 12th on Broadway
13th and Broadway	On south side of Broadway 40' east of west curb line on 13th
13th and Broadway	NE corner 40' east of 13th on Broadway
14th and Broadway	NE corner 40' east of 14th on Broadway
14th and Broadway	SW corner 40' west of 14th on Broadway
15th and Broadway	NE corner 40' east of 15th on Broadway
15th and Broadway	On south side of Broadway 40' east of Blessing Hospital at 14th driveway
16th and Broadway	NE corner 40' east of 16th on Broadway
16th and Broadway	SW corner 40' west of 16th on Broadway
17th and Broadway	NE corner 40' east of 17th on Broadway
17th and Broadway	On south side of Broadway 40' east of alley which is east of 17th Street line
18th and Broadway	NE corner 50' north of Broadway on 18th
18th and Broadway	NE corner 40' east of 18th on Broadway

18th and Spring	SE corner 40' south of Spring on 18th
18th and Oak	SE corner 40' south of Oak on 18th
18th and College	SE corner 40' south of College on 18th
18th and Elm	SE corner 40' east of 18th on Elm
20th and Elm	SW corner 40' west of 20th on Elm
20th and College	SE corner 40' east of 20th on College
21st and College	40' east of street light, located on College north side of street
22nd and College	SW corner 40' west of 22nd on College
23rd and College	40' east of street light, located on north side of College
24th and College	SW corner 40' west of 24th on College
24th and Oak	NW corner 40' north of Oak on 24th
24th and Spring	NW corner 40' north of Spring on 24th
24th and Broadway	NW corner 40' north of Broadway on 24th
23rd and Broadway	40' west of street light on north side of Broadway
22nd and Broadway	NE corner 40' east of 22nd on Broadway
21st and Broadway	40' west of fireplug on north side of Broadway
20th and Broadway	NE corner 40' east of 20th on Broadway
19th and Broadway	40’ east of fireplug on north side of Broadway

STATE

12th and Ohio	SE corner 40' south of Ohio on 12th
12th and Payson	SE corner 40' south of Payson on 12th
12th and Washington	SE corner 40' south of Washington on 12th
12th and Jefferson	NE corner 40' east of 12th on Jefferson
12th and Madison	SE corner 40' south of Madison on 12th
12th and Monroe	SE corner 40' south of Monroe on 12th
12th and Adams	SW corner 40' west of 12th on Adams
11th and Adams	NW corner 40' north of Adams on 11th
11th and Monroe	NW corner 40' north of Monroe on 11th
11th and Madison	NW corner 40' north of Madison on 1lth
11th and Jefferson	SW corner 42' south of Jefferson on 11th extending 40' south to north edge of first driveway on west side of 11th
12th and Jefferson	SE corner 40' south of Jefferson on 12th
13th and Jefferson	NE corner 40' east of 13th on Jefferson
14th and Jefferson	NE corner 40' east of 14th on Jefferson
15th and Jefferson	NE corner 40' east of 15th on Jefferson
16th and Jefferson	NE corner 40' east of 16th on Jefferson
17th and Jefferson	NE corner 40' east of 17th on Jefferson
18th and Jefferson	NE corner 40' east of 18th on Jefferson
19th and Jefferson	NE corner 40' west of 19th on Jefferson

20th and Jefferson	SE corner 40' south of Jefferson on 20th
20th and Madison	SE corner 40' south of Madison on 20th
20th and Monroe	SE corner 40' south of Monroe on 20th
20th and Adams	NE corner 40' east of 20th on Adams
19th and Adams	SW corner 40' west of 19th on Adams
18th and Adams	SE corner 40' south of Adams on 18th
18th and Jackson	SE corner 40' south of Jackson on 18th
18th and Van Buren	SW corner 40` west of 18th on VanBuren
17th and Van Buren	SW corner 40' west of 17th on VanBuren
16th and Van Buren	SE corner 40' south of VanBuren on 16th
16th and Harrison	NE corner 40' east of 16th on Harrison
17th and Harrison	NE corner 40' east of l7th on Harrison
18th and Harrison	NE corner 40’ east of 18th on Harrison
20th and Harrison	NE corner 40' east of 20th on Harrison
22nd and Harrison	Good Samaritan Home
22nd and Van Buren	NW corner 40' north of VanBuren on 22nd
22nd and Jackson	NW corner 40' north of Jackson on 22nd
22nd and Adams	NW corner 40' north of Adams on 22nd
22nd and Monroe	NW corner 40' north of Monroe on 22nd
22nd and Madison	NW corner 40' north of Madison on 22nd
22nd and Jefferson	NW corner 40' north of Jefferson on 22nd
22nd and Washington	NW corner 40' north of Washington on 22nd
22nd and Payson	NW corner 40' north of Payson on 22nd
22nd and Ohio	NW corner 40' north of Ohio on 22nd
22nd and State	SW corner 40' west of 22nd on State
21st and State	SW corner 40' west of 21st on State
20th and State	SW corner 40' west of 20th on State
19th and State	SW corner 40' west of 19th on State
18th and State	SW corner 40' west of 18th on State
17th and State	SW corner 40' west of 17th on State
16th and State	SW corner 40' west of l6th on State
15th and State	SW corner 40' west of 15th on State
14th and State	SW corner 40' west of 14th on State
12th and State	North side of State commencing 245' west of centerline of 12th extending west 40'
12th and State	South side of State commencing 178' east of centerline of 12th extending east 40'
11th and State	SW corner 40` west of 11th on State
10th and State	NE corner 40' east of 10th on State
9th and State	NE corner 40' east of 9th on State
9th and State	SW corner 40' west of 9th on State
8th and State	SW corner 59' south of State on 8th

MALL VIA STATE

22nd and Harrison	NE corner 40' north of Harrison on 22nd
22nd and VanBuren	SE corner 40' south of VanBuren on 22nd
22nd and Jackson	SE corner 40' south of Jackson on 22nd
22nd and Adams	SE corner 40’ south of Adams on 22nd
22nd and Monroe	SE corner 40' south of Monroe on 22nd
22nd and Madison	SE corner 40' south of Madison on 22nd
22nd and Jefferson	SE corner 40' south of Jefferson on 22nd
22nd and Washington	SE corner 40' south of to Washington on 22nd
22nd and Payson	SE corner 40' south of Payson on 22nd
22nd and Ohio	SE corner 40' south of Ohio on 22nd
22nd and State	SE corner 40' south of State on 22nd
23rd and State	SE corner 40' west of 23rd on State
24th and State	South side 40' west of bank facilities north-south drive
30th and State	SW corner 35' west of 30th on State
36th and State	East side 35' north commencing at the north edge of Baron’s drive
36th and Holiday Drive	NE corner 35' north of Holiday Drive on 36th
36th and Maine	SE corner commencing 45' south of Maine on 36th and extending 35' south
36th and Broadway	SE corner 35' south of Broadway on 36th
36th and Broadway	NW corner 35' north of Broadway on 36th
48th and Maine	NW corner 40' west of 48th on Maine

22ND AND HARRISON

36th and Maine	NW corner 35"north of Maine on 36th
36th and Maine	SW corner 40' west of 36th on Maine
36th and Holiday Drive	West side 35' north of Holiday Drive on 36th
36th and State	NW corner 35' north of State on 36th
30th and State	NE corner 35' east of 30th on State
24th and State	West side commencing at the east-west alley extending 35' south
24th and Ohio	NW corner 35' north of Ohio on 24th
24th and Payson	NW corner 40' north of Payson on 24th
24th and Washington	NW corner 40' north of Washington on 24th
24th and Jefferson	NW corner 40' north of Jefferson on 24th
24th and Madison	NW corner 40' north of Madison on 24th
24th and Monroe	NW corner 40' north of Monroe on 24th
24th and Adams	NW corner 40' north of Adams on 24th
24th and Jackson	NW corner 40' north of Jackson on 24th

24th and Van Buren	NW corner 40' north of Van Buren on 24th
24th and Harrison	NW corner 40' north of Harrison on 24th
23rd and Harrison	NE corner 44' east of 23rd on Harrison

(2) Bus zones as above established shall only be used by buses for the loading and unloading of passengers and shall be kept free and clear of all other vehicles and obstruction of any kind or character whatsoever. Operators shall not leave their buses in the downtown business section.

(3) All buses shall stop so that both right wheels are within twelve (12) inches of a curb, and no bus shall stop so that the rear end protrudes into the intersection or other- space reserved for pedestrians to cross.

(4) No person shall park in a bus zone.

(5) Zones for taxicab stands: (Reserved).

(6) That a bus zone shall be establishes for the Trailways Bus Station on the south side of Hampshire Street commencing at a point 33’ west of the west curbline of Sixth Street, and extending west 43’ thereof, which shall only be used by Trailways’ busses for the loading and unloading of passengers and shall be kept free and clear of all other vehicles and obstructions of any kind or character whatsoever.

Each successive hour of violation shall constitute a separate offense.

20.515 <u>Stopping for passengers and merchandise</u> ---

(1) A vehicle may be momentarily stopped within a traffic lane for the entrance or discharge of passengers only if such passenger is waiting at the curb adjacent to the place where the vehicle stops.

(2) Subject to the provisions of Section 20.502 hereof, a vehicle used for commercial hauling, delivering, mail pick up and other pick up and delivery operations may be stopped within a traffic lane, or be so parked as to partially or wholly obstruct a traffic lane for the loading and unloading of merchandise only for such period as shall be absolutely necessary for the actual operation of loading and unloading only if no adequate parking space outside of the traffic lane is available within 100’ of the entrance to the building where the pick up or delivery is to be made, provided, however, that the license granted by this Section shall not apply except on Sundays and holidays and between the hours of 9:30 p.m. and 11:00 a.m. in the area bounded on the north by Broadway, on the east by Twelfth, on the south by Jersey and on the west by Fourth inclusive.

20.516 <u>Alleys</u> --- No person shall park a vehicle within an alley in such a manner or under such conditions as to leave available less than 10’ of the width of the roadway for the free movement of vehicular traffic, and no person shall stop, stand, or park a vehicle within an alley in such position as to block the driveway entrance to any abutting property.

20.517 <u>Signs</u> --- The Superintendent of Street and Bridge and no unauthorized person shall cause signs to be posted in all areas where parking is limited or prohibited indicating such limitations or prohibitions.

20.518 <u>Aircraft parking</u> --- No aircraft or airplane shall be parked or left unattended within 150' of the aircraft fuel farm located at the Quincy Municipal Airport.

20.519 <u>Handicapped parking privileges</u> --- Vehicles displaying handicapped person identification devices as issued or approved by the Secretary of State (including handicapped person parking permits, transporter of handicapped person parking permits, handicapped person vehicle registration plates, and disabled veteran vehicle registration plates) and all vehicles displaying handicapped person parking permits as issued by any municipal corporation in the State of Illinois may be parked at specially designated handicapped parking spaces within the city, and may further park in conformity with Section 11-1301.1 of the Illinois Vehicle Code.

20.520 <u>Designation of spaces</u> --- The city traffic engineer and the owners or lessees of private property within the city are hereby authorized to determine and designate by proper signs, places which shall be reserved for the parking of vehicles displaying handicapped person parking devices as set forth in Section 20.519.

20.521 <u>Prohibition</u> --- The parking of any motor vehicle in a space designated for vehicles for handicapped persons is prohibited unless such vehicle shall have displayed thereon handicapped person identification devices or permits as provides herein.

20.522 <u>Penalty</u> ---

(1) **Notice of violation**: Any owner or operator of any vehicle parked in a space designated for vehicles for handicapped persons in violation of this Article V shall, in addition to such other relief as the law may afford, be subject to the Notice of Violation Provisions of Section 32.003 of Chapter 32 of this Code

(2) **Fine**: Any owner or operator of a vehicle found guilty of violating the provisions of this Article V shall be fined one hundred dollars ($100.00) in addition to any costs or charges connected with removal or storage of any vehicle, authorized pursuant to state law or otherwise by this Code.

ARTICLE VI UPTOWN PARKING

Section 20.601 **Definitions** ---- For the purposes hereof, the following terms shall have the meanings respectively ascribed for them, except as the context may otherwise require:

(1) **Vehicle**: The term "vehicle" shall mean and include any and every device, in, upon or by which any person or property is or may be transported or drawn upon a highway, including but not limited to automobiles, trucks, bicycles, motorcycles, and mopeds.

(2) **Street**: The term "street" shall mean and include any public street, avenue, road, boulevard, highway or other public place located in the city established for the use of vehicles.

(3) **Parking lot**: The term "parking lot' shall mean and include those off-street areas established for the use and parking of vehicles. For the purposes hereof, the following parking lots have heretofore been and are established:

(a) **Lot A**: Lot A is a part of that area generally bounded by Seventh Street on the east, Jersey Street on the south, Sixth Street on the west, and a public alley on the north.

(b) **Lot B**: Lot B is a part of that area generally bounded by Eighth Street on the east, Jersey Street on the south, Seventh Street on the west, and a public alley on the north.

(c) **Lot D**: Lot D is a part of that area generally bounded by Seventh Street on the east, a public alley on the south, Sixth Street on the west, and Vermont Street on the north, except to the extent a portion of said lot was previously conveyed by deed dated May 12, 1987.

(d) **Lot F**: Lot F is a part of that area generally bounded by Fifth Street on the east, a public alley on the south, Fourth Street on the west, and Vermont Street on the north.

(e) **Lot G**: Lot G is a part of that area generally bounded by Sixth Street on the east, a public alley on the south, Fifth Street on the west and Hampshire Street on the north.

(f) **Lot H**: Lot H is a part of that area generally bounded by Fourth Street on the east, a public alley on the south, Third Street on the west, and Maine Street on the north.

(g) **Lot I**: Lot I is a part of that area generally bounded by Seventh Street on the east, a public alley on the south, Sixth Street on the west, and Hampshire Street on the north.

(h) **Lot J**: Lot J is a part of that area generally bounded by Michelmann Steel Construction Co. on the east, the City of Quincy Water Plant on the south, a public alley on the west, and Hampshire Street on the north.

(4) **Person**: The term "person" shall mean and include any natural person, firm, partnership, association or corporation.

(5) **Operator**: The term "operator" shall mean and include every person who shall operate, drive or be in control of any vehicle upon any street.

(6) **Park or parking**: The term "park" or "parking" shall mean and include the standing of any vehicle, whether occupied or not, otherwise than when temporarily and actually engaged in loading or unloading merchandise or passengers.

20.602 **Parking zones** ---- The following described parts of streets and parking lots are hereby established as parking zones as set forth herein:

(1) **On street**:

(a) **Fifteen (15) minutes**: The following described parts of streets are hereby established as fifteen (l5) minute parking zones:

	Boundaries	Side of Street
Eighth	Eighth - from alley between Vermont and Hampshire to the corner of Eighth and Hampshire (that is, adjacent to the post office).	East and West
Maine	Commencing at a point 55' east of the curb line of Seventh Street and extending east of Eighth Street.	South
Maine	First 2 parking spaces immediately east of the driveway to the Salvation Army Thrift Store, 812 Maine	South

(b) **One (1) hour**: The following described parts of streets are hereby established as one (1) hour parking zones:

Street	Boundaries	Side of Street
Vermont	Fifth to Sixth	South
Maine	Point east of the north curbline of Maine at 11th, front of Brown Drug Store, extending 165' west	North

(c) **Two (2) hour**: The following described parts of streets are hereby established as two (2) hour parking zones:

Street	Boundaries	Side of Street
Maine	Fourth to Fifth	North and South
Maine	Fifth to Twelfth	North and South
Fifth	Jersey to Vermont	East and West
Fifth	Vermont to Broadway	West
Sixth	Jersey to Vermont	East and West
Sixth	Vermont of Broadway	East
Seventh	Jersey to Hampshire	East and West
Tenth	Maine to Jersey	West
Vermont	117' west of Fifth east to Fifth	North
Hampshire	Fourth to Fifth	North and South
Hampshire	Fifth to Seventh	North and South

Hampshire	Hampshire - from post office building access alley or driveway between Eighth and Hampshire (that is, adjacent to post office).	North
Hampshire	Commencing at a point 165` east of the east curbline of Tenth Street and extending 60' East	North
Hampshire	Commencing at Seventh Street and extending East to Eighth Street	North

(d) **Three (3) hour**: The following described parts of streets are hereby established as three (3) hour parking zones:

Street	**Boundaries**	**Side of Street**
Jersey	Fifth to Seventh	North and South
Vermont	Sixth to Seventh	North and South
Eighth	Maine to Hampshire	East and West

(2) **Off-street**:

(a) **Hourly**:

1.) **Lot A**: Except for those parking spaces leased pursuant to Section 20.602(2)(b) below, and further except for those parking spaces (located) south of the fifth (5th) stall of each aisle, all parking spaces in Lot A shall be restricted to two (2) hour time limits.

2.) **Lot G**: Except for those parking spaces leased pursuant to Section 20.602(2)(b) below, all parking spaces in Lot G shall be restricted to two (2) hour time limits.

3.) **Lot I**: Except for those 9 spaces abutting the building at 600 Hampshire Street, and the spaces in the middle and eastern rows, which are unrestricted, and those parking spaces leased pursuant to section 20.602(2)(b) below, all parking spaces in Lot I shall be restricted to two (2) hour time limits.

(b) **Monthly**: There shall be available for rental or lease on a monthly basis parking spaces in such parking lots, at such locations and for such charges as set forth herein. The City Council reserves the right to cancel such rented or leased parking spaces at any time. Applications for the rental or lease of parking spaces on a monthly basis shall be filed with the City Treasurer. The City Treasurer shall approve or reject such applications in the order filed as parking spaces are available. Those persons currently renting or leasing parking spaces on a monthly basis in the parking lots described shall have priority in the order of currently renting or leasing the same. Payment for parking spaces leased or rented on a monthly basis shall be payable monthly in advance to the City Treasurer of the City of Quincy, provided however that the initial three (3) months of rental or leasing shall be paid in advance upon the application

being approved but prior to assignment of the parking space. Payment shall not be pro-rated for partial months except that parking spaces first rented or leased after the fifteenth of any month shall be one-half of the payment otherwise applicable for a month. The City Treasurer may rent or lease fewer than the maximum number of spaces designated below if deemed in the best interests of the public. The maximum number of parking spaces available, the location of each and the applicable monthly charge are as hereinafter set forth. The specific location suggested for parking spaces, if any, is not mandatory. Instead, the Director of Public Works may specify other locations within the lot designated if deemed appropriate.

Parking Lot	**Maximum Number Of Rental Spaces**	**Monthly Charge**	**Suggested Location**
Lot A	36	$25.00	East & South perimeter
Lot D	15	$25.00	East perimeter
Lot F	12	$25.00	None
Lot G	30	$25.00	East perimeter
Lot H	18	$25.00	East perimeter
Lot I	7	$25.00	East perimeter

20.603 **Charges** --- Except for rented or leased parking spaces, all parking, although restricted, shall be free of charge. This is not intended, however, to limit fines or penalties for violations of the provisions of this Article.

20.604 **Time limits** --- Except as specifically provided herein, this Article shall not be deemed to limit the length of time at which a vehicle is parked in any parking space for which a time limit is not presented. This is not intended, however, to limit other violations of the ordinances of the City of Quincy, including but not limited to, those pertaining to abandoned or derelict vehicles.

20.605 **Marking spaces and signs** --- The Superintendent of Street and Bridge shall have markings painted or placed upon the curb, street or other area adjacent to each parking space and the angle at which vehicles are to be parked at areas referred to herein or otherwise as the superintendent shall deem appropriate. Each vehicle parking within any such areas or within the City of Quincy shall park within the lines or markings so established. It shall be unlawful to park any vehicle across any such line or marking or to pack said vehicle in such a position that the same shall not be entirely within the area designated by such lines or markings. The superintendent shall further locate signs as appropriate to reasonably advise the public of the parking restrictions herein established.

20.606 **Manner of parking in diagonal parking stalls** --- All vehicles shall be parked in diagonal parking stalls with the radiator or front directed at the parking meter or standard. No person shall park a vehicle in a diagonal parking stall so that the same is parked contrary to the direction hereof.

20.607 Overtime parking --- No owner, operator, manager or driver of any vehicle shall park any vehicle in any parking space beyond the time limits established hereby. No person shall cause or permit a vehicle to be parked overtime. The owner of any vehicle parked overtime shall be presumed to be the operator manager or driver thereof unless the owner can prove to the contrary. Each excessive period of time shall constitute a separate offense. No person shall move such person's vehicle from one (1) parking space to another or others within the same parking lot for the purpose of occupying any parking space or spaces in such parking lot for two or more substantially successive periods of time for which parking is permitted in that parking space in such parking lot permitting the least continuous parking.

20.608 Enforcement mark --- The personnel of the City of Quincy employed to enforce the overtime provisions hereof are authorized to reasonably mark vehicles parked on any street or parking lot. The consent of the owner or operator of such vehicle shall be conclusively implied from the parking of any vehicle on a street or parking lot. It shall be unlawful for any person to cause or permit the removal of any such mark on a vehicle hereunder.

20.609 Injury to lots or equipment thereon --- It shall be unlawful for any person to willfully deface, damage, tamper with, destroy or impair the usefulness of any parking lot or equipment thereon.

20.610 Hours of operation --- The provisions herein provided shall control parking between the hours of 8:00 o’clock a.m. and 5:00 o'clock p.m. on all days except Saturdays, Sundays, New Year's Day, Memorial Day, Fourth of July, Labor Day, Thanksgiving Day, Christmas Day and other legal holidays as designated by the City of Quincy. Said provisions shall not control parking on said holidays or between the hours not specified. Notwithstanding anything herein to the contrary, no persons other than the renter, lessee or such renter's or lessee's license, shall park in any parking space rented or leased on a monthly basis at any time. Except as otherwise provided herein, when said provisions are not controlling parking, as herein provided, vehicles may be parked without observance of time limits, but the parking lines and markings shall otherwise be adhered to in such parking in the same manner as required at other times and the other provisions hereof in full force and effect.

20.611 Jurisdiction --- Enforcement of these provisions shall be under the jurisdiction of the Chief of Police, and maintenance of the lots and other supervisory authority shall be under the Director of Public Works. The director shall have authority to designate both on and off-street parking spaces for handicapped persons as provided in Section 20.519(4)(a). Such jurisdiction shall not, however, limit the authority of the members of the Quincy Police Department to enforce the provisions hereof.

20.612 Income --- All income received by the City of Quincy pursuant to rented or leased parking pursuant to Section 20.602(2)(b), and as a result of voluntary payment of penalties for overtime parking pursuant to Section 20.620(1), shall be retained for the separate and exclusive purpose of maintaining parking spaces, lots and equipment, employing necessary personnel and other expenses related to this Article or uptown parking. The City Council however, reserves the

right at any time to otherwise expend such finds whether or not accumulated for any other purposes whatsoever.

20.613 - 20.619 (Reserved)

20.620 <u>Penalties</u> --- Any person, firm or corporation who or which otherwise violates any of the provisions of this Article shall, in addition to such other relief as the law may afford, be punishable as set forth in Chapter 32 of this Code.

ARTICLE VII BICYCLES

Section 20.701 **<u>Bicycle dealers</u>** --- Every person, firm or corporation engaged in the business of buying, selling, exchanging or trading in used or second hand bicycles shall make a report by the tenth day of each month to the Chief of Police of all used or second hand bicycles bought, exchanged or traded in during the previous month, on forms provided by the Chief of Police. Each such report shall contain a full and complete description of such used or second hand bicycles, including whenever available the serial number, factory number, frame number, color, type, model, frame size, wheel size, name of brake and other identification, the date of purchase or trade, together with the sex, name, address, age, height and weight of the person or persons selling or trading in such bicycles.

It shall be unlawful for any person, firm or corporation engaged in the business of buying second hand bicycles to purchase any such second hand bicycles from a minor under eighteen years of age unless such sale is consented to in writing by the parent or guardian of such minor.

20.702 **<u>Alteration or dismantling bicycles</u>** --- It shall be unlawful for any person to willfully or maliciously remove, destroy, mutilate or alter the factory number or frame number of any bicycle.

20.703 **<u>Equipment on bicycle</u>** ---

(1) **Brakes**: Every bicycle when operated upon the streets or public ways shall be equipped with a brake adequate to control the movement of and to stop such bicycle when necessary.

(2) **Lamps and reflectors on bicycles**: During the period from sunset to sunrise every bicycle shall be equipped with a lamp on the front exhibiting a white light visible from a distance of at least 500’ to the front, and with a lamp on the rear exhibiting a red light visible from a distance of 500’ to the rear, except that a red reflector not less than one and one-half (l-1/2) inches in diameter may be used instead of a rear light.

(3) **Audible signal**: No person shall ride a bicycle unless it is equipped with a bell or other device capable of giving a signal audible for a distance of at least one hundred feet; except that no bicycle shall be equipped with, nor shall any person use upon a bicycle, any siren or whistle.

20.704 **<u>Operation of bicycles</u>** ---

(1) Every bicycle when operated upon a street or public way shall be kept as close to the right hand curb as practicable.

(2) No bicycle shall be ridden upon a sidewalk in a business district. No bicycle shall be ridden at any time in any place or in such a manner as to be dangerous to persons or property.

(3) No person riding upon any bicycle shall attach the same or himself to any moving vehicle upon any street or public way.

(4) The operator of a bicycle shall not carry another person on the bicycle when operating such bicycle upon any street or public way, nor shall the operator of any such bicycle tow or draw any coaster, sled, person on roller skates, toy vehicle, or other similar vehicle on the streets or public ways.

(5) Persons riding bicycles upon the streets or public ways shall not ride more than two abreast.

(6) No bicycle shall be used to carry more persons at one time than the number for which it is designed and equipped.

(7) No person riding a bicycle shall carry any package, bundle or article which prevents the ride from keeping both hands upon the handlebars.

(8) No rider of a bicycle shall remove both hands from the handlebars or feet from the pedals or practice any acrobatic or fancy riding on any street or public way; nor shall any person operating a bicycle upon a street or public way participate in any race for speed or endurance contest with any other vehicle except under permit from and under the supervision of the office of the Chief of Police.

20.705 <u>Categories</u> ---

(1) As regards only violations of this Article VII of this Chapter 20, there are hereby created two classes of offenders:

(a) Category I offenders are those persons who have, at any time, been granted any driving privilege by the office of the Illinois Secretary of State, whether restricted or unlimited, and whether held by the Category I offender at the time of the violation of this Article VII of this Chapter 20.

(b) Category II offenders are persons, irrespective of age, who have never been issued any driving privilege, whether restricted or unlimited, and whether held by the Category II offender at the time of the violation of this Article II of this Chapter 20 at any time.

(2) **Penalty**: Any person, firm or corporation, irrespective of category of offender, who violates any provision of Section 20.701 and/or 20.702 shall, in addition to such other relief as the law may afford, be punishable as set forth in Chapter 32 of this Code.

(3) **Penalty**: Any category I offender who violates any of the provisions of this title shall, in addition to such other relief as the law may afford, be punishable as set forth, in Chapter 32 of this Code.

(4) **Penalty**: Any category II offender who violates any of the provisions of Section 20.703 and/or 20.704 shall be punishable solely and only as set forth in Section 32.003 of this Code and shall further be subject only to notices of violation and not to uniform citations or other forms of charging documents.

ARTICLE VIII DRIVERS

Section 20.801 **Age limit** --- It shall be unlawful for any person under fifteen years of age to operate any motor vehicle upon any street in the city.

20.802 **Liquor or drugs** --- It shall be unlawful for the habitual user of narcotic drugs to operate any motor vehicle on any street; and it shall be unlawful for any intoxicated person, or any person under the influence of alcohol or of a narcotic drug, to operate or attempt to operate any motor vehicle on any street.

20.803 The driver of any vehicle involved in an accident resulting in injury to or death of any person shall immediately stop such vehicle at the scene of such accident, or as close thereto as possible and shall then forthwith return to, and in every event shall remain, at the scene of the accident until a police authority arrives at the scene of such accident and until he or she has fulfilled the requirements of Section 20.805. Such stop shall be made without obstructing traffic more than necessary. Any person who has failed to stop or to comply with said requirements, if hospitalized and incapacitated, shall within 48 hours after being discharged from the hospital, report the place of accident, the date, the approximate time, the name, address, the registration number of the vehicle driven, and the names if the occupants, if any, of such vehicle, at a police station or sheriff's office near the place where such accident occurred.

20.804 The driver of any vehicle involved in an accident resulting only in damage to a vehicle which is driven or attended by any person shall immediately stop such vehicle at the scene of such accident or as close thereto as possible, but shall forthwith return to and in every event shall remain at the scene of the accident until he or she has fulfilled the requirements of Section 20.805. Such stop shall be made without obstructing traffic more than is necessary. A report of each such accident shall be given by the driver of any vehicle concerned in it to the Chief of Police within twenty-four hours after the accident. Such a report should not be required unless property damage exceeds two hundred fifty dollars ($250.00) or unless a personal injury is involved.

20.805 The driver of any vehicle involved in an accident resulting in injury or death of any person or damage to any vehicle which is driven or attended by any person shall give his name, address, and the registration number of the vehicle he is driving and upon request and if available exhibit his driver's license to the person struck or the driver or occupant of or person attending any vehicle collided with, and shall render to any person injured in such accident reasonable assistance, including the carrying or the making of arrangements for the carrying of such person to a physician, surgeon or hospital for medical or surgical treatment, if it is apparent that such treatment is necessary or if such carrying is requested by the injured persons.

20.806 The driver of any vehicle which collides with or is involved, in an accident with any vehicle which is unattended, or other property, resulting in any damage to such other vehicle or property shall immediately stop and shall then and there locate and notify the operator or owner of the vehicle or other property of his name, address and the registration number of the vehicle he is driving or shall attach securely in a conspicuous place or in the vehicle or the property struck a

written notice giving his name, address and registration number of the vehicle he is driving and shall without unnecessary delay notify the nearest office of a duly authorized police authority and then make a report of such accident.

20.807 **Penalty** --- Any person, firm or corporation who violates any of the provisions of this title shall, in addition to such other relief as the law may afford, be punishable as set forth in Chapter 32 of this Code.

ARTICLE IX AMBULANCES

Section 20.901 <u>Ambulance defined</u> --- Ambulance is defined to be any vehicle equipped and used for transporting the wounded, injured or sick, but shall not include invalid coaches or funeral coaches.

The foregoing definition shall apply to any and all such vehicles operated in the city, regardless of whether or not the regular base for operation and dispatch of such vehicles is located outside the city.

20.902 <u>Ambulance is an emergency vehicle</u> ---- An ambulance shall be considered an authorized emergency vehicle entitled to the privileges and exemptions of authorized emergency vehicles.

20.903 <u>Exemption from certain traffic laws</u> ---

(1) The driver of an ambulance while same is in operation for the purpose of transporting a person who is wounded, injured or sick to a place where said person is to receive emergency medical treatment may:

(a) Disregard traffic light or sign stop signals irrespective of other ordinances of this city, provided that there are no vehicles or persons so near to the immediate area so as to create any danger or hazard to any person or property by proceeding in disregard of such stop signals; provided further, that the flashing light and siren described in subsection (3) hereof shall be in full operation during the entire trip.

(b) Park or stand, irrespective of other ordinances of this city, and may disregard traffic regulations pertaining to usage of lanes, provided, however, that no traffic lane marker shall be disregarded if there shall be vehicles or persons in or so near the immediate area so as to create any danger or hazard to any person or property by proceeding in disregard of any such traffic lane marker; provided further, that at all such times the flashing light and siren described in subsection (3) hereof shall be in full operation.

(c) All ambulances shall be equipped with a siren producing an audible signal of an intensity of one hundred (100) decibels at a distance of fifty (50) feet from said siren, and display a flashing red light visible from the top of said ambulance over a distance of five hundred (500) feet under normal atmospheric conditions to the front, sides and rear of said vehicle.

(2) Upon the approach of an ambulance being driven by a driver making use of the siren and flashing light as described herein, the driver of every other vehicle upon the same or intersecting roadways shall yield the right-of-way and shall immediately drive to a position parallel to, and as close as possible to, the right-hand edge or curb of the highway clear of any intersection, and shall stop, if possible, and remain in position until the ambulance has passed.

(3) No ambulance shall violate any traffic ordinances of this city other than as described in subsection (1) above.

ARTICLE X ABANDONED AND DERELICT VEHICLES

Section 20.1001 **Definitions** --- For the purposes of this Article, the following terms shall have the meanings herein ascribed, except as the context may otherwise require:

"**Abandoned vehicle**" means any motor vehicle or other vehicle, boat, trailer, or mobile home which is in a state of disrepair, partially dismantled, wrecked, or otherwise inoperable so as to render the vehicle incapable of being driven or used in its condition; or any motor vehicle or other vehicle, boat, trailer, or mobile home which has not been moved or used for seven (7) consecutive days or more and is apparently deserted. Any evidence that a motor vehicle has not been moved, under its own power (as distinct from being towed, pushed or pulled) for seven (7) consecutive days or more and is unregistered, shall be prima facie evidence that the vehicle is abandoned within the meaning hereof. The term "abandoned vehicle" as aforesaid shall not be construed to include for the purposes of this ordinance, any such vehicle, boat, trailer or mobile home which is kept in an enclosed building; on the premises of a business enterprise operated in a lawful place and manner, when necessary to the operation of such business enterprise; or in an appropriate storage place or depository maintained in a lawful place and manner by the city or other party.

"**Derelict vehicle**" means any inoperable currently unregistered, discarded motor vehicle, regardless of title having lost its character as a substantial property or left unattended without justification contrary to the public policy expressed in this article. The exclusions relative to abandoned vehicle shall also apply to derelict vehicles.

"**Vehicle**" means every device in, upon or by which any person or property is or may be transported or drawn upon a street or highway, whether subject to or exempt from registration, excepting however, bicycles, snowmobiles and devices used exclusively upon stationary rails or tracks. It shall include, for purposes hereof, any motor vehicle or other vehicle, boat, trailer, or mobile home.

20.1002 **Public property** --- The City Council finds that abandoned and derelict vehicles: constitute a safety hazard and a public nuisance; are detrimental to the health, safety and welfare of the general public by harboring disease, providing breeding places for vermin, inviting plundering, creating fire hazards, and presenting physical dangers to children and others; produce scenic blights which degrade the environment and adversely affect land values and the proper maintenance and continuing development of the city; represent a resource out of place and an energy loss to the economy, and require local governmental attention in order to assure the expeditious removal of these abandoned and derelict vehicles.

The City Council declares, therefore, that it is the policy of the city to prohibit the abandonment of vehicles and the retention of derelicts and to enforce such prohibition by law.

20.1003 **Abandonment of vehicles prohibited** --- It shall be unlawful to cause or permit any motor vehicle or other vehicle, boat, trailer, or mobile home, or any part thereof, to be abandoned on private or public property, and in view of the general public, including without limitation any highway, with the city, or otherwise to be considered an abandoned or derelict vehicle. Any such abandoned or derelict vehicle is hereby declared a nuisance whether on private or public property, including. but not limited to, the property of the owner or bartee of the same.

20.1004 <u>Notification to city police department</u> --- When any abandoned or derelict vehicle comes into the temporary possession or custody of any person in this city not the owner of such vehicle, such person shall immediately notify the city Police Department of such abandoned or derelict vehicle. Upon receiving such notification or otherwise discovering an abandoned or derelict vehicle, such vehicle shall be disposed of in accordance with Section 20.1005, or as otherwise allowed by law.

20.1005 <u>Disposition of abandoned or derelict vehicles</u> --- Any vehicle abandoned or derelict in violation of this Article shall be disposed of in accordance with this Section or as otherwise allowed by law.

(1) **Identifying and tracing vehicle ownership**: Upon receiving notification of or otherwise discovering an abandoned or derelict vehicle the city Police Department shall, if it does not already know the identity of the registered owner or other person legally entitled thereto, cause the vehicle and license registration records of the Secretary of State of the State of Illinois, or foreign state if applicable, to be searched utilizing the vehicle identification number and license plate year and number displayed on the vehicle, if any. The owner of such vehicle as disclosed from such search shall be the owner of such vehicle for the purposes of the disposition of such vehicle. The city Police Department shall further cause the motor vehicles files of the Illinois State Police to be searched by a directed communication to the Illinois State Police for stolen or wanted information on the vehicle. When the Illinois State Police files are searched with negative results, the information contained in the National Crime Information Center (NCIC) files shall be searched in accordance with State law by the Illinois State Police. When the registered owner or other person legally entitled to the possession of a vehicle cannot be identified from the registration files of the State of Illinois or from the registration files of a foreign state, if applicable, the Quincy Police Department shall so notify the Illinois State Police for the purpose of identifying the vehicle owner or other person legally entitled to the possession of the vehicle. The information obtained by the Illinois State Police shall be immediately forwarded to the Quincy Police Department.

(2) **Notification of owner**: When the identity of the owner or other person legally entitled to an abandoned or derelict vehicle is known or has been determined in accordance with Section 20.1005(1), above, the Chief of Police, or his designate, shall cause such owner or other person to be given notice that such vehicle has been determined to be an abandoned or derelict vehicle in violation of this Article and that unless such vehicle is removed within seven (7) days from the date such notice is mailed, postage prepaid, by certified mail, the vehicle will be towed and impounded in accordance herewith, and the owner will be charged with having violated this Article. The Chief of Police, or his designate, may cause, but is not required to personally serve such notice on such owner or other person, and need not establish whether such notice is actually received if mailed. In those instances where the certified notification specified herein has been returned by the postal authorities to the Quincy Police Department due to the addressee having moved, being unknown at the address obtained from the registration records of this State of Illinois, or having refused delivery, the sending of a second certified notice is not required. A copy of such notice shall also be served upon any lienholder if the same has been disclosed by the title search required above. The notice required by this Section may be in substantially the following form:

Date: _____

TO: _____ NAME _____

_____ ADDRESS _____

The Quincy Police Department has determined that a certain vehicle registered in your name (or to which you are legally entitled) is abandoned or derelict within the meaning of the abandoned and derelict vehicle regulations of the city of Quincy. The vehicle was found is now 1ocated at _____ in the City of Quincy, Illinois. It is described as follows:

Year of manufacture:
Manufacturer's trade name:
Manufacturer's series name:
Body style:
Color:
Vehicle identification number:
License plate year and number:

In accordance with the abandoned and derelict vehicle regulations, this vehicle will be towed, impounded and disposed of by the Quincy Police Department in accordance with the regulations if the vehicle is not removed within seven (7) days from the date of this notice. Also, you may be charged with violating such regulations.

Note: Removal of the vehicle to another location (on the right of way or on private property) will not abate the nuisance unless the vehicle is kept in an enclosed building or removed to another lawful storage area (for example, a licensed salvage yard commercial body shop, etc).

In the event that you disagree with the determination that the vehicle is an abandoned or derelict vehicle, you are entitled to a hearing on this determination on in accordance with the abandoned or derelict vehicle regulations. Basically, you are required to file a written request for a hearing within seven (7) days of the date of this notice with the Chief of Police of the Quincy Police Department who will promptly review the matter with you and consider whatever pertinent information you wish to present. The decision of the Chief of Police may then be appealed to the Mayor. Ultimately, you may demand that the vehicle not be towed and impounded until a judicial hearing has been held on a charge of violation of the regulations. These rights and other matters are described in the abandoned and derelict vehicle regulations themselves, which are available at the Quincy Police Department.

If you are not the owner of the described vehicle or have no interest in the vehicle at this time please contact the Quincy Police Department and so advise it.

QUINCY POLICE DEPARTMENT
BY _____

When the identity of the owner or other person legally entitled to an abandoned or derelict vehicle is not known and has not been determined in accordance with the provisions hereof, and in addition to the notice required above when the identity of the owner or other person legally entitled to a vehicle is known, the Chief of Police, or his designate, shall cause a prominent notice to be placed on the abandoned motor vehicle stating that the vehicle has been determined to be abandoned in accordance with the abandoned or derelict vehicle regulations of the City of Quincy and that it will be towed and impounded unless removed within seven (7) days from the date the notice was posted. The date the notice is posted shall be endorsed on the notice, the officer posting such notice, and the telephone number of the Quincy Police Department at which information may be obtained relative to the notice. The Chief of Police, or his designate, shall further cause the owner or party in possession of private property on which the vehicle is located to be informed that the vehicle will be towed and impounded after seven (7) days, unless such vehicle is located on private property of the owner of such vehicle or such private property owner notified the Quincy Police Department of such abandoned or derelict vehicle. Such private property owner shall have all rights of review under this Article if such private property owner is a person legally entitled to such vehicle. Notice to the owner or party in possession is informational only and not jurisdictional.

(3) **Review of determination**: When a vehicle has been determined to be an abandoned or derelict vehicle within the meaning of this Article, the owner thereof or other person legally entitled thereto shall have the right to have such determination reviewed in accordance with this subsection.

(a) **Chief of Police or Deputy Chief of Police**: Any owner of or other person legally entitled to a vehicle determined to be an abandoned or derelict vehicle within the meaning of this article may within seven (7) days the notification required under Section 4(b) is mailed or personally delivered, as the case may be, file a written request with the Chief of Police that he review such determination stating the reason or reasons why such vehicle is not an abandoned or derelict vehicle within the meaning of this Article. Within seven (7) days of such written request, the Chief of Police shall review such determination giving the owner or other person an opportunity to personally be heard and present whatever information as such owner or other person considers pertinent. After reviewing such determination, the Chief of Police shall render a written decision thereon which shall be promptly mailed, postage prepaid, by certified mail, to such owner or other person, or delivered personally as stated heretofore.

(b) **Judicial determination**: If the owner or other person legally entitled to a vehicle determined to an abandoned or derelict vehicle within the meaning of this Article does not agree with the decision of the Chief of Police or Deputy Chief, such person may, within seven (7) days after the decision of the Chief of Police or Deputy Chief, is mailed to such owner or they person, file a written notice with the Chief of Police or Deputy Chief that such person does not agree with the decision made and further request that the vehicle not be towed or impounded pending disposition of a charge of violation with this Article. In that event, such person, if not already charged, shall be charged with violating this Article and such vehicle shall not be towed and impounded until such charge has been disposed of. After such charge has been disposed of, finding such owner or other person guilty, such vehicle shall then be towed and impounded in accordance with this Article unless such nuisance has been abated.

(c) **Stay of towing and impounding:** Pending any review of a determination that a vehicle is an abandoned or derelict vehicle within the meaning of this Article, any such vehicle shall not be towed or impounded except as is permitted for emergency tows.

(4) **Towing and impounding of vehicles**: Subject to review of any determination pursuant hereto that a vehicle is an abandoned or derelict vehicle within the meaning of this Article, such abandoned or derelict vehicle may be towed and impounded after a waiting period of seven (7) days or more from the date the notification required pursuant to Section 20.1005 has been mailed or delivered, as the case may be. The Chief of Police, or his designate, shall authorize a towing service to remove and take possession of the abandoned vehicle. The towing service shall safely keep the towed vehicle and its contents, maintain a record of the town until the vehicle is claimed by the owner or any other person legally entitled to possession thereof, or until it is disposed of as provided in this Article. When any vehicle is authorized to a towed away, the Quincy Police Department shall keep and maintain a record of the vehicle towed, listing the color, year of manufacturer, manufacturer's trade name, manufacturer's series name, body style vehicle identification number, and license plate year and number displayed on the vehicle. The record shall also include the date and hour of the tow, the location towed from, the location towed to, the reason for towing, and the name of the officer authorizing the tow. A record search of the vehicle shall also be made.

(5) **Reclaiming vehicles**: At any time before a vehicle is sold at public sale or disposed of as provided in this Article, the owner or other person legally entitled to its possession may reclaim the vehicle by presenting to the Quincy Police Department proof of ownership or proof of the right of possession of the vehicle. No vehicle shall be released to the owner thereof or other person entitled thereto until and unless such owner or such person has paid all towing and storage charges on account of such vehicle.

(6) **Disposal of unclaimed vehicles**: Abandoned or derelict vehicles which have been towed and impounded shall be disposed of in accordance with this subsection.

(a) **Disposal with notice**: Whenever an abandoned or derelict vehicle, seven (7) years of age or newer, remains unclaimed by the registered owner or other person legally entitled to its possession for a period of thirty (30) days after notice has been given by mail or delivered as provided in Section 20.1005, the Quincy Police Department shall cause such vehicle to be sold at public sale to the highest bidder. Notice of the time and place of the sale shall be posted in a conspicuous place for at least ten (10) days prior to the sale on the premises where the vehicle has been impounded. At least ten (10) days prior to the sale, the Quincy Police Department, or the towing service where the vehicle is impounded, shall cause a notice of the time and place of the sale to be sent by certified mail to the registered owner or other person known by the Quincy Police Department or the towing service to be legally entitled to the possession of such vehicle. Such notice shall contain a complete description of the vehicle to be sold and what steps must be taken by any legally entitled person to reclaim the vehicle. Whenever an abandoned or derelict vehicle more than seven (7) years of age is towed or impounded, it may be sold as provided above or disposed of as junk only at the discretion of the Chief of Police, or his designate. A vehicle classified as antique (25 years of age or older) may also be sold to any person desiring to restore the same.

(b) **Disposal without notice**: When the identity of the registered owner or other person legally entitled to the possession of an abandoned or derelict vehicle of seven (7) days of age or newer cannot be determined in accordance with 20.1005, the vehicle may be sold as provided in

Section 20.1005(6)(a), but without notice of the time and place of the sale being mailed to the registered owner or other person legally entitled to the possession of the vehicle. Whenever an abandoned or derelict vehicle is more than seven (7) years of age is towed and impounded, it may be sold as provided above or disposed of as junk only at the discretion of the Chief of Police, or his designate.

(7) **Proceeds of sale**: When a vehicle located within the city is authorized to be towed, impounded and disposed of as set forth in this Article, the proceeds of the public sale or other disposition after the deduction of towing, storage and processing charges shall be deposited in the city's treasury.

(8) **Police reports**: When a vehicle in the custody of the Quincy Police Department is reclaimed by the registered owner or other legally entitled persons, or when the vehicle is sold at public sale or otherwise disposed of as provided in this Article, a report of the transaction shall be maintained by the Quincy Police Department for a period of one (1) year from the date of the sale or disposal.

20.1006 <u>Emergency tows</u> --- Notwithstanding anything in this Article to the contrary, when a vehicle is creating a traffic hazard because of its position in relation to a highway, its physical appearance is causing the impeding of traffic, or it otherwise presents a danger to the public health and safety on public or private property, the Chief of Police, or his designate, may authorize and direct the immediate towing and impounding of such vehicle without notice to the owner thereof or other person legally entitled thereto. Immediately thereafter, the owner or other person legally entitled thereto shall be identified and notified in accordance with this Article. The determination may also be reviewed and vehicle disposed of in accordance with this Article, provided that if it is concluded that such vehicle is not an abandoned or derelict vehicle within the meaning of this Article, such vehicle shall be released without charge to the owner thereof or other person legally entitled thereto.

20.1007 <u>Immunity</u> --- Any police officer, towing service owner, operator or employee shall not be held to answer or be liable for damages in any action brought by the registered owner, former registered owner, or his legal representative, or any other person legally entitled to the possession of a vehicle a when the vehicle was processed and sold or disposed of as provided by this Article. All necessary parties shall have the full right and authority to enter upon private property for the enforcement of this Article when any vehicle is in view of the general public.

20.1008 <u>No exclusive</u> --- The provisions hereof shall be considered in addition to any procedures established, otherwise by law or ordinance for the removal and disposition of abandoned or derelict vehicles.

ARTICLE XI PENALTY

Section 20.1101 **Penalty** --- Any person, firm or corporation who violates any of the provisions of this title shall, in addition to such other relief as the law may afford, be punishable as set forth in Chapter 32 of this Code.

CHAPTER 21

HEALTH REGULATIONS

ARTICLE I	**NUISANCES AND ABATMENT OF NUISANCES**
ARTICLE II	**FIRE PREVENTION**
ARTICLE III	**GARBAGE AND RECYCLING**
ARTICLE IV	**OTHER REGULATIONS**
ARTICLE V	**OPEN BURNING**

ARTICLE I NUISANCES AND ABATEMENT OF NUISANCES

Section 21.101 **Definitions and prohibition** --- The following acts, conduct, circumstances and conditions are hereby declared and defined to be nuisances and, when committed, performed or permitted to exist by any person, firm or corporation (herein collectively referred to as "person") within the corporate limits of the City of Quincy, whether on public or private property, are hereby declared to be unlawful and prohibited:

(1) **Common law nuisances**: To commit, perform or permit any act or offense which is a nuisance according to the common law of the State of Illinois.

(2) **Defined nuisance**: To commit, perform or permit any act or offense declared or defined to be a nuisance by this Article, by this Code, by any of the ordinances of the City of Quincy or any laws of the State of Illinois.

(3) **Undefined nuisances**: To commit, perform or permit any act, conduct, circumstances or condition which constitutes an unreasonable, unwarrantable or unlawful use by a person of property, real or personal, or from such person's own improper, indecent or unlawful personal conduct which works an obstruction or injury to a right of another or of the public and produces such material annoyance, inconvenience, discomfort, hurt or injury that the law will presume an actionable nuisance.

(4) **Litter**: To dump, deposit, drop, throw, discard, leave, cause or permit the dumping, depositing, dropping; throwing, discarding, or leaving of litter upon any public or private property in the City of Quincy or upon or into any river, lake, pond, creek or other stream or body of water in the City of Quincy (even if owned by the person) unless:

(a) The property has been designated by the State or any of its agencies, political subdivisions, units of local government or school districts for the disposal of litter, and the litter is disposed of on that property in accordance with all applicable laws, rules and regulations.

(b) The litter is placed into a receptacle or other container designed for and intended by the owner or tenant in lawful possession of that property for the lawful deposit of litter.

(c) The person is the owner or tenant in lawful possession of the property or has first obtained the consent of the owner or tenant in lawful possession, or the act is done under the personal direction of the owner or tenant, and the same does not create a public health or safety hazard, a public nuisance or a fire hazard.

(d) The person is acting under the direction of a proper public official during special cleanup days.

(e) The person is lawfully acting in or reacting to an emergency situation where health and safety is threatened and removes and properly disposes of such litter when the emergency no longer exists.

For the purposes of this provision, unless the context otherwise requires, "litter" means any discarded, used or unconsumed substance or waste. "Litter" may include, but is not limited to, any garbage, trash, refuse, debris, rubbish, grass clippings, or other lawn or garden waste, newspaper, magazines, glass, metal, plastic or paper containers or other packaging construction material, abandoned vehicle or derelict vehicle as otherwise defined by this Code, motor vehicle parts, furniture, appliances, brush, oil, carcass of a dead animal, any nauseous or offensive matter of any kind, any object likely to injure any person or create a traffic hazard, any offal or noisome substance, or anything else of any unsightly nature.

(5) **Litter accumulation**: To allow litter to accumulate upon real property, of which the person charged is the owner, agent, occupant or person in possession, charge or control, in such a manner as to constitute a public nuisance or in such a manner that the litter may be blown or otherwise carried by the natural elements onto the real property of another person. For purposes of this provision, litter shall have the meaning as defined immediately above. While any of those named may be charged under this provision, if the property is a single-family dwelling or otherwise occupied by or in the possession, charge or control of one person, or group, such person or each of the members of the group shall be considered responsible for the accumulation unless the facts indicate to the contrary.

(6) **Trees and plants**: To allow any tree, shrub, vine, cutting, scion, grass, plant, plant part, plant product or any part thereof within the City of Quincy to remain if the same is dead, dangerous or liable to fall upon neighboring buildings or other improvements other than those belonging to the owner of the tree or other plant; the same is infested with injurious insect pests or infected with plant diseases which are liable to spread to other plants, plant product or places to the injury thereof, or to the injury or damage of man or animal; or the same is one of any species or variety of tree, shrub, vine or other plant not essential to the welfare of the people of the City of Quincy which may serve as a favorable host plant and/or promote the prevalence and abundance of insect pests or plant diseases, or any stage thereof, injurious to other plants essential to the welfare of the people of the City of Quincy or to the injury or damage of man or animal including, but not necessarily limited to, the female individuals of the box elder variety of tree, further known as acer negundo.

(7) **Water pollution**:

(a) To corrupt or render unwholesome or impure the water of any spring, river, stream, pond or lake to the injury or prejudice of others.

(b) To own, maintain, construct, use or control any unsafe or dangerous plumbing system, in violation of the standards and provisions of Article V (Cross Connection Control) of Chapter 25 (Water) of this Code.

(8) **Obstructions**: To obstruct or encroach upon public highways, private ways, streets, alleys, commons, landing places and ways to burying places.

(9) **Noxious exhalations**: To erect, continue or use any building or other place for the exercise of any trade, employment or manufacture, which, by occasioning noxious exhalations, offensive smells or otherwise, is offensive or dangerous to the health of individuals or of the public.

(10) **Advertisement**: To advertise or expose wares or occupations, or notices or materials by painting notice of the same or affixing them to fences, walls, windows, building exteriors, utility poles, or on hydrants, other public or private property, or on rock or other natural objects, without the consent of the owner, or if in the highway or other public place, without permission of the proper authorities.

(11) **Unfit, unsafe or dangerous structures**: To own, maintain, keep, let, use or occupy any building, structure, shed, tent, lot, premises, improvement, fence or any other man-made structure (in this Article collectively referred to as "structure") which is unfit, unsafe or dangerous.

For purposes of this provision, structure shall be considered unfit, unsafe or dangerous if any one or more of the following conditions exist with respect to the structure or any portion thereof:

(a) The structure or any portion thereof is designed or intended for human habitation and is unfit for such purpose.

(b) The structure or any portion thereof is in violation of the housing standards imposed by Article II (Fire Prevention) of Chapter 21 (Health Regulations) or Article VI (Housing Standards) of Chapter 23 (Buildings, Construction and Development Regulations) of this Code or otherwise fails to comply with requirements imposed by local, state or federal laws, ordinances, rules and regulations.

(c) The structure or any portion thereof is unfit, unsafe or dangerous because of lack of repair or maintenance or it is otherwise in a condition such that it is detrimental to life, health or safety.

(d) The structure or any portion thereof is dangerous to life, health or safety because of the existence of contagious diseases or unsanitary conditions likely to cause sickness, disease, illness, or harm to its occupants, if any, or other persons or neighboring structures.

(e) The structure or any portion hereof is kept in such a condition that it or its contents occasion noxious exhalations or offensive smells.

(f) The structure or any portion hereof, because of faulty construction, age, deterioration, lack of proper repair, previous fire or any other cause or condition, is especially liable to fire and constitutes or creates a fire hazard.

(g) The structure or any portion hereof, because of faulty construction, age, deterioration, lack of proper repair, previous fire or other cause, is liable to collapse.

(h) The structure or any portion hereof, because of lack of windows or doors, or because of the presence of openings, is available to or opened to malefactors, disorderly persons, minors or any other persons who are not the lawful or proper occupants of the structure.

(i) The structure or any portion hereof is under construction or has been under construction and remains uncompleted for an unreasonable period of time or the construction thereof is not diligently and promptly pursued to completion.

(j) The structure or any portion hereof contains violations of any City of Quincy ordinance, law, rule, regulation or code or provision which establishes construction, plumbing, heating, electrical, fire prevention, sanitation or other health and safety standards with respect thereto.

(k) The structure or any portion thereof has been damaged or destroyed by fire and is not promptly demolished, removed, reconstructed, rebuilt or repaired or any hole resulting after demolition or removal of a structure not promptly filled with earth, stone, concrete or solid fill to ground level.

(1) The structure or any portion thereof is otherwise a dangerous and unsafe structure or an uncompleted and abandoned structure.

It shall not be a defense to any of the foregoing that the structure is boarded up or otherwise enclosed nor may any court order a structure to be boarded up or otherwise enclosed. It shall also not be a defense to any action that a structure is not occupied or utility services terminated or suspended.

(12) **Rats**: To store or place any materials in a manner which may or is likely to harbor rats.

(13) **Weeds**: To allow any weeds such as jimsonweed, burdock, ragweed, thistle, cocklebur or other weeds of a like kind found growing in any lot or tract of land in the City of Quincy or weeds which excel unpleasant or noxious odor or which may conceal filthy deposits or

which are a breeding place for mosquitoes, flies or insects or which because of uncleanliness and sanitation are menace to public health.

(14) **Weed height**: To permit any weeds, grass or plants other than lawful trees, shrubs, vines, flowers or other similar plants commonly and generally considered ornamental plants, to grow to a height exceeding ten (10) inches anywhere in the City of Quincy.

(15) **Specified plants**: To plant or allow any bush of the species of tall or common barberry, or europena barberry, further known as berberis vulgaris, or its like horticultural varieties, in the City of Quincy.

(16) **Non-compliance with demolition of buildings or structures and requirement of a fire protection guard ordinance**: To undertake, permit or allow the demolition of buildings or structures or to not place a fire protection guard as is required without complying with the demolition of buildings and structures and requirement of a fire protection guard ordinance, Article IV of Chapter 23, Municipal Code of the City of Quincy of 1980.

21.102 <u>Non-summary abatement notice and review</u> ---

(1) **Generally**: The owner, agent, occupant or person in possession, charge or control of any land, structure, premises, item or object, real or personally in or upon which any nuisance exists shall be served a notice to abate the same within a specified reasonable time in such manner as the notice shall direct or in any other reasonable manner. The time allowed by such notice shall, in any event, be considered reasonable if seven (7) days notice is given, except that in the case of nuisances describe in subsections (13) (Weeds), (14) (Weed height) of (15) (Specified plants) of Section 21.101 (Definition and Prohibition) three (3) days notice shall be deemed sufficient.

(2) **Person giving notice**: A notice to abate a nuisance may be given by the Building Inspector, the City Engineer, the Chief of the Police Department, the Chief of the Fire Department, any assistant or designee of any of the foregoing, any member of the Police Department, any member of the Fire Department, any person designated by the Mayor as having authority to give such notice and any other person or officer of the City of Quincy possessing police powers.

(3) **Service of notice**: The notice to the owner, agent, occupant or person in possession, charge or control of the land, structure, premises, item or object in or upon which the nuisance exists shall be served upon the same either personally or by registered or certified mail, return receipt requested. If registered or certified mail is used, the notice period shall be deemed to have commenced to run from the date such notice is mailed. A notice shall be deemed sufficient although the person to which it is directed refused delivery of the same or it is not deliverable. The notice shall be presumed delivered if not returned to the City of Quincy as not deliverable. However, a copy of such notice shall then be sent by ordinary mail unless notice was additionally given by ordinary mail previously, but this shall not extend the period of the notice given. In the event the owner, agent, occupant or person in possession, charge or control of the land, structure, premises, item or object is unknown or on reasonable search is not ascertainable, it shall be sufficient to give such notice to the owner of the premises as disclosed in the current tax records of Adams County, Illinois. If notice is served on anyone other than the owner as shown in the tax records of Adams County, a copy thereof shall be delivered personally to the owner or sent by ordinary mail to the owner at the same time as notice is give to the other person. If any nuisance relates to an unfit, unsafe or dangerous structure, a copy of the notice shall also be sent to any

lien holders of record, provided the lack of such notice shall not affect any proceedings hereunder. Whenever the owner, occupant, agent or person in possession, charge or control of the real or personal property cannot be ascertained, even from the tax records of Adams County, Illinois, the notice may be posted on the premises.

(4) **Contents of notice**: Every notice served under this Article shall, in addition to requiring the abatement of the nuisance, state the proposed method of abatement and warn the person to which the notice is directed that a failure to accomplish such abatement within the time stated herein may result in the abatement of the nuisance by the City of Quincy and that the cost or expenses related to such removal by the City of Quincy shall be charged to the person. The proposed method of abatement shall not limit the method of abatement to be used.

(5) **Posting property**: Any real or personal property relative to which a notice has or is about to be given may be posted advising that the property has been declared a nuisance, has been condemned, has been declared dangerous and unsafe or has been declared unsafe for human occupancy or use. The form of notice shall be determined by the person giving the notice. No person shall remove any such sign or poster without the permission of the person posting the notice, or if unknown, the City Engineer, the Building Inspector or any assistant of the Building Inspector.

It shall be a violation of this Code for any person to use or occupy any real or personal property which has been posted as unsafe for human occupancy or use in accordance herewith. Any person lawfully entitled to use, possession or occupancy of said property may seek review of the posting with the Director of Public Works as provided in Section 21.102(6).

(6) **Review**: When a person shall have received a notice to abate a nuisance under these provisions, he, she or it, or any other materially interested person, shall have the right to have such notice reviewed in accordance with this subsection.

(a) **Director of Public Works**: Any person who or which has received a notice to abate a nuisance, or other materially interested person, may within the time prescribed in such notice file a written request with the Director of Public Works that the director review the notice, stating the reason or reasons why the act, conduct, circumstance or condition referred to in such notice does not constitute a nuisance. The written notice must have been received by the Director of Public Works or in the Director’s office prior to the period set forth in the notice or the first late of the Director's office is open for business after such date if closed on such date. Mailing such notice on such date shall be insufficient. The Director of Public Works, or another person designated by the Director, shall promptly give the person an opportunity to personally be heard and present whatever information as he, she or it considers pertinent. After reviewing the determination, the Director of Public Works or designee may revoke such notice, modify such notice or allow such notice to stand, prescribing a subsequent date within which such nuisance should be abated, not less than seven (7) days following the decision of the Director of Public Works or designee.

(b) **Judicial determination**: If the person does not agree with the decision of the Director of Public Works or designee, such person may within the subsequent period designated by the Director of Public Works or designee notify the Director of Public Works and the person who gave such original notice to abate nuisance that he, she or it does not agree with the decision made. In that event, such person shall be charged with the violation of this Article, if not already charged. The existence or non-existence of a nuisance will then be determined in conjunction with the disposition of the charge. Review by the Director of Public Works or designee may be

waived in writing. In that event, a judicial determination shall be pursued as if such review had been pursued.

(c) **Stay**: Pending any review under the previous provisions and the disposition of a charge (if the review proceedings have been pursued), a nuisance shall not be abated by the City of Quincy except when summary abatement is authorized or becomes authorized as the nuisance becomes more substantive or aggravated or otherwise warrants summary abatement. The review provisions herein contained shall in no way limit the right of the City of Quincy or an officer of the City of Quincy to abate a nuisance summarily under the provisions of this Article or as otherwise may be allowed by law or by non-summary abatement after notice if the review proceedings are not pursued. It is intended that under such circumstances, action may be taken to abate a nuisance immediately or without disposition of a charge, if filed.

21.103 <u>Non-summary abatement</u> ---

(1) **Review not sought**: If a nuisance is not timely abated after notice is given in accordance with this Article and review of the notice is not sought, the City of Quincy may immediately proceed to abate or remove the nuisance after the time limit stated in the notice has expired irrespective of whether a charge is filed alleging violation of this Article. It is intended that non-summary abatement will be delayed only if review of a notice is timely sought.

(2) **Review sought**: If review of the notice is sought and a nuisance is not abated prior to completion of the review process and the disposition of the charge, the City of Quincy may immediately proceed to abate a nuisance if the person is found guilty, pleads guilty or is placed on supervision after a plea of guilty whether or not ultimately accepted by the court. The court may on motion enter any appropriate orders regarding abatement of the nuisance, including, but not necessarily limited to, an order directing that the person be provided an additional reasonable time to abate the nuisance, an order modifying the method of abatement proposed by the City of Quincy, an order specifically authorizing the City of Quincy to proceed with the abatement of the nuisance, an order directing the person to abate such nuisance or an order restraining the person from continuing the nuisance in the future.

(3) **Methods of abatement**: If abatement, is authorized under this Article, the City of Quincy may abate or remove the nuisance in any and all of the following manners, except as may be otherwise ordered by a court of competent jurisdiction:

(a) Proceeding to abate or remove such nuisance using city employees or others in any reasonable manner. In the case of a structure, abatement may, as appropriate, be by demolition or repair of a structure or causing the demolition or repair or a structure.

(b) Any other manner allowed by law or in equity or reasonable under the circumstances.

(c) Any manner authorized by a court of competent jurisdiction.

The proposed method of abatement shall not limit the method of abatement which may be used unless otherwise ordered by the court or diminish the discretion of the court to order that the person charged abate a nuisance or enter any other appropriate order.

21.104 <u>Summary abatement</u> --- Whenever, in the opinion of the officer of the City of Quincy entitled to give notice pursuant to this Article, the maintenance or continuation of nuisance creates an imminent threat of serious or unreasonable injury to persons or serious or unreasonable damage to personal or real property, such officer may immediately proceed to abate

such nuisance in any reasonable manner if circumstances do not allow implementation or full implementation of non-summary abatement procedures. Whenever the owner, occupant, agent or person in possession, charge or control of the real or personal property which has become a nuisance is unknown or cannot readily be found or circumstances do not allow, the officer may proceed to abate such nuisance without notice. Any reasonable order may be entered by the official to abate a nuisance summarily when circumstances require and may include, but shall not be limited to, prohibiting occupancy of a structure. A copy of such order or other notice thereof may be posted on the real or personal property involved. It shall be unlawful for any person to disobey, remove or deface any such order or notice. Where the abatement of the nuisance requires continuing acts by the corporate authorities beyond the initial summary abatement or any other additional summary abatements, it may seek abatement of such nuisance on a permanent basis through the non-summary procedures as soon as reasonably possible.

21.105 <u>Costs of abatement</u> ---

(1) **Generally**: Whenever the City of Quincy is required to abate or remove a nuisance pursuant to this Article or as otherwise allowed by ordinances of the City of Quincy, the costs of expenses shall be a lien on the property to which they apply. If the property is personal property, the lien shall be on the real estate on which or at which the personal property is located. The City of Quincy shall collect the costs and expenses thereof in accordance with this Section.

(2) **Notice of cost**: Within sixty (60) days after the costs or expenses are incurred to abate or remove a nuisance, the City Treasurer or the Treasurer's designee shall give, or cause to be given, a statement notifying the person to whom or which the notice to abate a nuisance was sent, setting forth the cost or expenses incurred by the City of Quincy to abate or remove the nuisance. It shall be considered sufficient to give the statement personally or by ordinary mail sent to the same address as the origins notice. If the owner, occupant, agent or person in possession, charge or control of the real or personal property cannot be ascertained, even from the tax records of Adams County, Illinois, the statement may be posted on the premises.

(3) **Certification**: If the statement is not paid within thirty (30) days after the date thereof, the City Treasurer shall certify the same to the County Clerk of Adams County. The certification shall be filed not later than the 31st day of December following the expiration of such thirty (30) day period. The certification shall contain, to the best of the knowledge and belief of the City Treasurer, the name of the owner of the real estate as disclosed on the tax records of Adams County, Illinois, a description of the real estate sufficient for identification thereof, the real estate tax number of such real estate and the amount of the costs and expenses incurred. In determining the last date for filing such certification, the last date of payment within the thirty (30) days prescribed shall apply rather than the date the work is performed or the notice originally given. The amount so certified shall be deemed to be levied by the City as an individual assessment against the property involved. No further action need be taken by the corporate authorities to levy such amount.

(4) **Extension of assessment**: The County Clerk of Adams County, Illinois, shall extend, in the same manner as other taxes relative to such real estate, an individual assessment equal to the total of the amount certified to the County Clerk by the Treasurer of the City of Quincy. Such assessment shall be collected in the same manner as other taxes and paid to the City of Quincy.

(5) **Recorded notice of assessment**: In addition to filing the above certificate with the County Clerk, the Treasurer shall cause a notice of the assessment to be filed in the office of the

Recorder of Deeds in Adams County, Illinois, at such time. The notice shall certify the description of the real estate sufficient for identification thereof and the amount of the assessment. The recorded copy of the certification to the County Clerk shall be considered sufficient.

(6) **Bona fide purchasers**: The claim of the City of Quincy pursuant to these provisions shall not be valid as to any purchasers for good and sufficient value and without entice whose rights in and to such real estate have arisen subsequent o the abatement or removal of the nuisance and prior to the filing of the notice with the Recorder of Deeds in Adams County, Illinois. If the City Treasurer is notified of the existence of a bona fide purchaser for value, the Treasurer, or the Treasurer's designee, shall, if satisfied that the purchaser is bona fide, abate the individual assessment. The assessment may also be abated if earlier paid. Notice of abatement shall be filed with the County Clerk and Recorder of Deeds of Adams County, Illinois. The abatement shall not terminate any claim against the prior owner of the real estate.

(7) **Other remedies**: The above provisions shall not limit any other remedies of the City of Quincy to collect such costs or expenses. A court may, when considering a charge of violating this Article, order payment of the charges incurred by the City of Quincy. The City of Quincy may also enforce such lien as in cases of foreclosure.

(8) **Determination of costs**: The determination of costs of abatement shall be made by the Director of Public Works. Such determination shall equal the actual costs of abatement or removal, provided that the costs, if performed by employees of the City of Quincy, shall not be less than $60.00 per man-hour or part thereof. The costs of abatement shall also include the actual costs of mailing or serving documents, recording documents and any other incidental expenses.

21.106 <u>Immunity</u> --- Neither the City of Quincy nor any person abating or removing a nuisance pursuant to this Article or engaged in any matters related to the operations of this Article shall be held to answer or be liable for any damage for such action brought by the owner, agent, occupant, person in possession charge or control of the property involved, or others. This immunity shall be in addition to any immunity otherwise existing by law.

21.107 <u>Other remedies</u> --- This Article shall not limit any other rights or remedies of the City at Quincy provided in this Code or any other ordinance, statute, law, rule or regulation regarding the subject matter of this Article. These remedies are deemed cumulative.

21.108 <u>Practice</u> --- The purpose of this Article is to provide a prompt and efficient means of abating or having abated nuisances within the City of Quincy. It is not intended that this Article shall affect or regulate practice before the courts of the State of Illinois.

21.109 (Reserved)

21.110 <u>Penalty</u> --- In addition to any other relief which may be granted under this Article or otherwise, any person, firm or corporation who or which violates any of the provisions of this title shall, in addition to such other relief as the law may afford, be punishable as set forth in Chapter 32 of this Code. A violation may be charged under the provisions of this Article regardless of whether a notice to abate a nuisance has been given or whether the time to abate

such nuisance has expired. It shall be sufficient in charging a violation of this Article to merely cite "Section 21.101 (Nuisance)" or some equivalent, provided a court may direct that more specific pleadings be filed.

ARTICLE II FIRE PREVENTION

Section 21.201 <u>Adoption of 2000 International Fire Code</u> --- The City of Quincy hereby adopts and incorporates herein by this reference as fully as if set forth herein the 2000 International Fire Code of the International Code Counsel, (hereinafter referred to as "the Code") except as provided below, as criteria for prescribing the minimum requirements and controls to safeguard life, property or public welfare from the hazards of fire and explosion arising from the storage, handling or use of substances, materials or devices and from conditions hazardous to life, property or public welfare in the use of occupancy of buildings, structures, sheds, tents, lots or premises within the corporate limits of the City of Quincy. All building structures, sheds, tents, lots or premises shall conform to the Code provisions as set forth and adopted herein. One (1) copy of the Code shall be filed and shall remain on file in the office of the City Clerk for public use, inspection and examination. Adoption of the Code is subject to the following:

(1) Subsection 101.1 (Title) shall have inserted therein "City of Quincy" where provision is made for the name of the jurisdiction adopting the Code. Any references to the jurisdiction shall mean the City of Quincy, Adams County, Illinois.

(2) Subsection 108.0 (Board of Appeals) is not hereby adopted.

(3) Subsection 111.4 (Failure to Comply) is not hereby adopted.

(4) Subsection 109.2 and 109.2.1 (Notice of Violation) is not hereby adopted.

(5) Subsection 109.2.3 (Prosecution of Violations) is not hereby adopted.

(6) Subsection 109.3 (Violation Penalties) is not hereby adopted.

(7) Subsection 109.3.1 (Abatement of Violation) is not hereby adopted.

(8) Any reference in the Code to the "Fire Official" shall refer to the Fire Chief or other enforcing law officer of the City of Quincy Fire Department.

(9) Section 105.6.31 (Open Burning) shall have inserted after "permit is required" the following: "in accordance with the provisions of Article V of Chapter 21 of the City of Quincy Municipal Code (1980)."

(10) Subsection 3301.1 shall have inserted before "shall govern" the following: "Article I of Chapter 30 of the Municipal Code of the City of Quincy (1980)." The words "The provisions of this chapter" shall be deleted.

(11) The following appendices of the Code are hereby adopted:

Appendix B – Fire – Flow Requirements for Buildings
Appendix C – Fire Hydrant Locations and Distribution
Appendix D – Fire Apparatus Access Roads
Appendix E – Hazard Categories
Appendix F – Hazard Ranking
Appendix G – Cryogenic Fluids – Weight and Volume Equivalents

21.202 <u>Fire Prevention Bureau</u> --- There is hereby established within the City of Quincy Fire Department a Fire Prevention Bureau. It shall be the duty and responsibility of the Fire Prevention Bureau, and the individual members thereof, or the enforcing officials assigned to or working under the authority and supervision of the Fire Prevention Bureau to enforce the 2000 International Fire Code adopted by the City of Quincy and otherwise promote fire prevention. The Fire Prevention Bureau shall have such further duties and responsibilities as designated by the Fire chief. All persons serving within the Fire Prevention Bureau shall be sworn members of

the Fire Department. The specific individuals serving on a permanent, full time basis in the Fire Prevention Bureau shall be selected or appointed by the Board of Fire and Police Commissioners. The Board of Fire and Police Commissioners may establish examinations and other standards for permanent appointees to the Bureau. The Fire Chief may assign other sworn members of the Fire Department to the Fire Prevention Bureau on a temporary basis.

21.203 <u>Appeal</u> ---

(1) **Review by Fire Chief**: Any owner or person who is aggrieved or affected by an order, ruling, decision or interpretation of the Fire Prevention Bureau, or other enforcing officer, in any of the matters relative to the interpretation or enforcement of any of the provisions of the 2000 International Fire Code may request that the Fire Chief review such order, ruling, decision or interpretation. Such request must:

(a) be in writing identifying the name and mailing address of the owner or person requesting review;

(b) be filed with the Fire Chief, or in the office of the Fire Chief, within seven (7) days after the date of the notice of any order, ruling, decision or interpretation; and

(c) specify the specific grounds or reasons for seeking such review. The Fire Chief may affirm, reverse or modify such order, ruling, decision or interpretation as the Fire Chief shall deem appropriate in his or her discretion. The Fire Chief shall further have the right to grant a variance from the 2000 International Fire Code. Any order, ruling, decision, interpretation or variance made by the Fire Chief shall be in writing and shall be mailed to the owner or person requesting review at the address specified in the request for review.

(2) **Appeal to Building Commission**: Any owner or person who is aggrieved or affected by an order, ruling, decision, interpretation or variance made by the Fire Chief pursuant to Section 21.203(a), above, may appeal the order, ruling, decision or interpretation to the Building Commission established by and in accordance with Article XVIII (Building Commission) of Chapter 11 (Boards and Commissions) of the Municipal Code of Quincy. The time for filing such appeal with the Building Commission shall run from the late the Fire Chief makes his written action on review.

21.204 <u>Other ordinances</u> --- Except as may be specifically provided herein, no other ordinances imposing requirements on buildings, structures, sheds, tents, lots, or premises shall be nullified by those provision of the 2000 International Fire Code adopted herein, or any publications referred to therein. In all cases, the most rigid requirements shall control.

21.205 - 21.219 (Reserved)

21.220 <u>Violations and penalties</u> ---

(1) **Unlawful acts**: It shall be unlawful for any person, firm or corporation to own, maintain, keep, let, use or occupy any building, structure, shed, tent, lot or premises regulated by the 2000 International Fire Code, in conflict with or in violation of any of the provisions of the 2000 International Fire Code as hereby adopted.

(2) **Notice**: Whenever the Fire Prevention Bureau, or a member thereof, or other enforcing officer, observes an apparent or actual violation of the provisions of the 2000 International Fire Code or other code or ordinance under such official's jurisdiction, the Fire

Prevention Bureau or member thereof, or other enforcing officer, shall prepare a written notice describing the condition unsafe and specifying time limits for the required repairs or improvements to be made to render the building, structure, shed, tent, lot or premises safe and secure. The written notice shall be served upon the owner, duly authorized agent or occupant or other person responsible for the conditions under violation. Such notice shall be served either by delivering a copy of the same to such person or persons by ordinary mail to the last known post office address by delivering in person, by delivering it to and leaving it in the possession of a person charged with the premises, or in the case such person is not found upon the premises, by affixing a copy thereof in a conspicuous place at the entrance door or avenue of access; and such procedures shall be deemed the equivalent of personal notice.

(3) **Failure to correct violation**: If the notice is not complied with in accordance with the terms specified therein by the Fire Prevention Bureau or member thereof, or other enforcing officer, the Fire Prevention Bureau or member thereof, or other enforcing officer, may request that the Quincy Police Department initiate proceedings through the Quincy Police Department for violation thereof or request that the City of Quincy Legal Department institute appropriate proceedings at law or in equity to restrain correct or abate such violation or require the removal or termination of the unlawful use in violation of the provisions of the 2000 International Fire Code or of the order or direction made pursuant thereto.

(4) **Penalty**: Any person, firm or corporation who or which violates any provisions of this title shall in addition to such other relief as the law may afford, be punishable as set forth in Chapter 32 of this Code.

(5) **Abatement of violation**: The imposition of penalties shall not preclude the institution of appropriate actions to prevent unlawful construction, to abate a violation to prevent illegal occupancy of a building, structure or premises or to stop an illegal act, conduct, business or use of a building or structure on or about any premises.

ARTICLE III GARBAGE AND RECYCLING

Section 21.301 <u>Purpose</u> --- It is the purpose of this Article to promote, protect and facilitate the public, health, safety, morals and general welfare by the following:

(1) Instituting a recycling program, whereby the City of Quincy shall be the sole agents regulating collection of solid waste and requiring residents to purchase city stickers for the disposal of rubbish and garbage.

(2) Regulating the collection, accumulation and storage of solid wastes so as to:

(a) Retard the propagation and the harboring of rats, mice, mosquitoes, flies and other vermin.

(b) Eliminate filth and filthy deposits.

(c) Reduce the potential pollution of land, air, or water and the disease producing potential of decaying organic matter.

(d) Reduce the potential of spontaneous combustion and fire.

(e) Generally promote harmonious, peaceful and comfortable neighborhood life by the elimination of nuisances.

(f) Provide for the preservation of valuable natural resources through the elimination of recyclable materials from collection and landfills.

(3) Providing for the safe, orderly and economic collection and removal of accumulated waste.

(4) Provide for the disposal of solid waste in safe and sanitary methods and in compliance with applicable state and local rules and regulations.

21.302 <u>Definitions</u> --- The following words, when used in this Article, shall have the meanings ascribed to them in this Article, except in those instances where the context indicates otherwise.

(1) **Ashes**: The residue resulting from the burning of wood, coal, coke, or other combustible material. This definition excludes ashes resulting from industrial process.

(2) **Authorized Commercial Collector**: A person, firm, or corporation authorized to collect, convey and dispose of refuse in accord with the provisions of this Article.

(3) **Bi-Metal Container**: Shall mean empty food or beverage containers consisting of ferrous sides and bottom and an aluminum top.

(4) **Building or Accessory Structure**: A building or other structure constructed, existing and used; in conformity with the zoning, building and fire prevention ordinances, codes and regulations of the City of Quincy.

(5) **Bulky Waste**: Large household appliances, such as stoves, refrigerators, television sets, washing machines, or the equivalent in size in: furniture and furnishings, plumbing fixtures, large crates, tools, machinery or parts thereof and similar items.

(6) **City**: The City of Quincy, Illinois.

(7) **Construction and Demolition Waste**: Lumber, roofing material, sheathing, rubble, broken concrete plaster and brick, conduit, pipe, wire, insulation and similar material which results from a construction, demolition or remodeling process.

(8) **County**: The County of Adams and its regulator agencies.

(9) **City Garbage Stickers**: Shall mean any sticker distributed solely by the City of Quincy or its agents which shall bear an identification mark established by the city.

(10) **Dwelling Unit**: Any room or group of rooms located within a building and forming a single habitable unit with facilities which are used or intended to be used for living, sleeping, cooking, and eating by one (1) family.

(11) **Garbage**: All animal and vegetable waste solids resulting from the handling, preparation, cooking, and consumption of foods.

(12) **Glass Containers**: Small mean clean bottles and jars made of clear, green or brown glass. Expressly excluded are non-container glass and porcelain and ceramic products.

(13) **Household Rubbish**: Paper (except newspaper), wood, excesior, plastics, rags and cloth, leather, rubber, metals, tin cans, metal foils, ceramics, crockery and similar items normally produced by or originating from private residential occupancy; provided, however, that the items set forth herein need not be produced by or originate from a residence to be classed as "household rubbish" so long as such waste is similar to the waste produced by or originating in a residence as to size, weight and material. Household rubbish specifically excludes materials designated by the city as recyclable.

(14) **Industrial and Commercial Waste**: Any material or substance which is a waste by-product of the industrial or commercial process and shall include packaging materials and equipment used in the delivery or shipment of goods to or from the industrial commercial site.

(15) **Newspapers**: Shall mean paper of the type commonly referred to as newsprint and distributed at fixed intervals, having printing hereon news and opinions, containing advertisements and other matters of public interest. Expressly excluded, however, are newspapers which have been soiled.

(16) **Magazines and Periodicals**: Shall mean printed matter containing miscellaneous written pieces published at fixed intervals. Expressly excluded, however, are all other paper products of any nature whatsoever.

(17) **Municipal Collection Service**: A collection service established and operated by the City of Quincy or a private collection service under contract with the city.

(18) **Non-Collectable Waste**: Includes poisons, acids, caustics, explosives and other hazardous material that may cause damage or injury to collection equipment or personnel human or animal excrete; and dead animals.

(19) **Person**: Includes any natural person, association, partnership, firm or corporation.

(20) **Recyclable Materials/Recyclables**: Shall mean those materials specified by the city for collection in accordance with recycling regulations. Such material may include, but not be limited to, aluminum products, clean glass containers, bi-metal containers, newspapers, magazines and periodicals, plastic containers, corrugated cardboard, and yard wastes. What constitutes recyclable material may change depending upon what the city is able to dispose of through municipal recycling efforts.

(21) **Recycling**: Shall mean the separation, collection, processing, recovery, and sale or reuse of metals, glass, paper, plastics, and other materials which would otherwise be disposed of as solid waste.

(22) **Refuse**: All solid wastes, except body waste, and shall include, but not be limited to, ashes, rubbish, garbage industrial and commercial wastes and junk, except that refuse shall specifically exclude hazardous waste.

(23) **Rubbish**: Shall mean solid waste exclusive of garbage (e.g. non-recyclable glass, metal, paper, or plastic and plant material, wood, or non-putrescible solid waste).

(24) **State**: The State of Illinois and its regulatory agencies.

(25) **Vehicle**: Any device in, upon or by which any person or property is or may be transported or drawn upon a public highway, excepting devices moved by human power or used exclusively upon stationary rails or tracks.

21.303 <u>Proper Receptacle Required</u> --- It shall be the duty of every owner or occupant of any house, building, flat, or tenement in the City of Quincy where people reside, board, or lodge, or where animal or vegetable food is prepared and served at all times to maintain in good order a sufficient number of proper receptacles for garbage, tin cans, bottles and similar kitchen refuse. A proper receptacle shall include the following:

(1) A container with a lid supplied by an unauthorized commercial collector and designed in such a way as to prevent animals or birds from entering the area where garbage or refuse is placed.

(2) A metal or plastic can with a close fitting lid and having a capacity of not more than thirty (30) gallons and with suitable handles.

(3) A "disposal bag" which for purposes hereof shall mean a plastic garbage bag of proper strength for the intended contents and properly secured at the tip and having a capacity of not more than thirty-three (33) gallons.

(4) A container supplied by the City of Quincy and intended to hold materials for recycling.

(5) A sticker supplied by the City of Quincy or its agents. It shall be the duty of the occupant, and not the owner, of any such house, building, flat, or tenement to maintain any receptacles provided to deposit only wrapped garbage and other kitchen refuse in the receptacle provided for this purpose and to prevent such garbage and other kitchen refuse from scattering.

21.304 <u>Special Containers</u> --- The City Council may, from time to time, by motion duly passed, provide a special container or containers that may be placed at a specified location locations for the purpose of receiving deposits of refuse. Such containers shall not be a depository for biodegradable household garbage. The depositories shall be used only by the citizens of Quincy, and shall be used only for the purpose of disposing of household refuse, and shall not be used by commercial establishments. Any person using said special depositories may be required to furnish proof of his or her name and address when requested by any police officer of the city, or by any person designated by the city to police the use of the depositories. If no satisfactory proof is made on request, the officer may deny use of the depository.

21.305 <u>Recycling Containers</u> --- The City Council may, by motion duly passed, provide for the separate collection of certain materials that may be reused or recycled and may provide each dwelling unit with a special container for designated materials

21.306 <u>Recycling Containers - Ownership/Use</u> --- Each dwelling unit located within the boundaries of the curbside collection recycling project will receive a special "recycling container". Such containers are to be used only for storage of recyclable materials targeted for collection by the city and for transportation to and placement of said materials at curbside for collection on a designated day. The "recycling containers" shall at all times remain the property of the City of Quincy and shall only be used by residents for the specified purpose. However,

each occupant of a household shall be responsible for normal and reasonable care of the container so provided.

21.307 Recyclable Materials - Collection/Ownership --- From the time of placement of recyclable materials at the curb or at a recycling depot designated by the city, such material shall become the property of the City of Quincy. It shall be unlawful for any person, firm or corporation not authorized by the city to collect or vandalize, or to cause to be collected or vandalized any city owned "recycling containers" or the contents of said containers. Any and each such unauthorized collection or act of vandalism is a violation of this ordinance and shall constitute a separate and distinct offense punishable as herein provided.

21.308 Return of Recycling Containers to the City ----- Any "recycling container" not being utilized for the purpose intended shall be returned to the Recycling Department of the City of Quincy. Any person or persons having in their possession such container shall upon moving outside the corporate limits of the City of Quincy, return said container to the City, or shall leave it at the premises being vacated for use by the next occupant of said premise.

21.309 Placement/Storage of Recycling Containers --- The "recycling containers" shall be stored on the residential premises to which they are distributed by the city. Such containers containing designated materials are to be placed at curbside for collection during specified times.

21.310 Replacement of Recycling Containers --- Abuse and/or misuse of the "recycling containers" is prohibited and shall be deemed a violation of this ordinance subject to the penalties provided herein. The city will provide replacement containers to households when it is determined by the city that replacement is warranted.

21.311 Yard Waste -- The City Council may by motion duly passed, provide for a separate collection of certain designated yard waste including leaves and grass clippings. Such wastes shall be packaged in plastic garbage bags marked in a designated manner to distinguish such wastes from normal household garbage. Yard wastes shall be placed at the curb for collection on designated days.

21.312 Time of Placement for Collection -- Materials placed out for garbage collection, yard waste collection or recyclable collection shall be placed at the designated collection point no sooner than 5:00 p.m. on the evening before the scheduled collection day. All containers for curbside collection must be removed by the owners by 5:00 a.m. following the collection day.

21.313 Disposal of Garbage and Household Rubbish --- It shall be unlawful to dump, destroy or otherwise dispose of garbage or household rubbish within the jurisdictional limits of the City of Quincy except at a state approved disposal site. This Section shall not apply to storage or processing at a commercial site of scrap, salvageable or recyclable materials. It shall be unlawful to deposit any garbage or refuse of any kind in any street, alley, or public way except as is provided in this Article or to place such garbage or refuse in such a manner that it can be blown about or scattered by the wind.

21.314 <u>Removal of Garbage and Refuse not Produced in Residences</u> -- Every person, firm, or corporation owning or controlling any hotel, motel, restaurant, cafe, tavern, or other premises where guests, customers, or boarders are fed daily shall cause all offal, table refuse, shells, and animal or vegetable matter commonly known and described as garbage, to be placed in proper receptacle, which shall be practically air and water tight, and shall cause all such substances deposited in such cans or receptacles to be removed daily from his or its premises and to be otherwise lawfully disposed of; provided however, that any such establishment not producing garbage in a quantity sufficient to warrant daily removal thereof may cause the removal thereof less frequently than daily unless the Building Inspector or the Director of Public Works orders otherwise. The removal and disposition of such substances shall be done by such person, firm or corporation at his or its own expense solely, and in accordance with the provisions of this Article and the applicable rules or directions by a Building Inspector or the Director of Public Works.

21.315 <u>Accumulation and Storage of Garbage or Rubbish</u> --- No person shall accumulate or store or permit to be accumulated or stored on any property within the City of Quincy any refuse in a method or in quantities not authorized by this Article and as hereinafter specified; provided, however, that these regulations shall not apply to any refuse or stored within a building or accessory structure constructed and maintained in accordance with duly established health, zoning, building laws, codes, and regulations, nor to the storage of clean material designated as a recyclable by the city. Household rubbish and garbage shall not be stored in manner that creates offensive or obnoxious odors. Rubbish and garbage shall be drained of liquids before it is placed for collection.

21.316 <u>Household Rubbish and Garbage Collection</u> --- Household rubbish and garbage shall be collected only in the following containers and methods:

(1) The municipal collection service shall be the sole collecting service for residential rubbish and garbage.

(2) All city residents will be required to purchase disposal bags (as defined in Section 21.303) for disposal of all household rubbish or garbage and such disposal bags shall have affixed thereto an appropriate garbage sticker or stickers as required in Section 21.321, below. The city and any authorized commercial collector shall only collect household rubbish and garbage contained in disposal bags as required herein. Any such disposal bag, deposit for city collection, shall be filled so as to weigh no more than forty (40) pounds and shall be securely tied and sealed at the time of collection. These provisions for the disposal of household rubbish and garbage shall not apply to "industrial and commercial properties" as defined in Section 21.320 herein.

(3) Tree trimmings, shrubbery clippings and similar material shall be cut in lengths not to exceed four (4) feet and securely tied with string or twine in bundles not more than two (2) feet in diameter. Collection shall be arranged on an individual basis with the City of Quincy Street Department. Trimmings not prepared as prescribed will not be collected. The Superintendent of Streets or his designee may determine an amount of trimmings to be excessive and deny collection. Material denied for collection under this provision may be collected by a private hauler.

(4) Recyclables shall be placed in the special "recycling container" provided by the City of Quincy and will not require a city disposal bag.

21.317 <u>Ashes</u> --- It is mandatory that ashes be thoroughly extinguished before placement for collection. Collection shall be accomplished by placement of the ashes in a disposal bag or by obtaining a disposal bag and securing the bag to a metal container. The municipal collection service shall collect the ashes if they are extinguished and placed in an empty disposal bag. Total net weight of ash shall not exceed forty (40) pounds per empty bag provided by resident. This bag must have the appropriate sticker attached thereto.

21.318 <u>Items Not Collected</u> --- The municipal collection service shall not be responsible for collection of the following wastes, except by special agreement.

(1) Commercial wastes, which shall be collected and properly disposed by an authorized commercial collector.

(2) Industrial wastes, which shall be collected and properly disposed of by an authorized commercial collector.

(3) Bulky wastes, which shall be collected and properly disposed of.

(4) Construction and demolition waste which shall be properly disposed of at a state approved disposal site.

21.319 <u>Collection Rules and Regulations</u> -- The collection of all ashes, garbage, and household rubbish from residences in the city shall be by the municipal collection service, except as herein provided, in accordance with the following:

(1) All refuse shall be prepared for collection in strict conformity with Article and deposited for collection in accordance with collection standards as adopted by the city from time to time.

(2) It shall be unlawful to place any material for the municipal collection service in unauthorized or defective disposal bags, torn bags or bundles not securely tied. Collection personnel may refuse to collect improperly prepared material and may give notice of such by affixing a tag to the container or material citing the violation. Failure to comply after first notice may result in prosecution under Section 21.322.

(3) Except when specifically authorized by the city, disposal bags shall be placed for collection at ground level at the right-of-way of a street or alley and readily accessible to and not more than ten (10) feet from the side of the street or alley from which the collection is made.

(4) Routes of collection will be along streets, alleys, and right-of-ways from time to time establishes by the city. Routes and pickup points will be determined on the basis of the most efficient routing of collection equipment.

(5) It shall be unlawful for any person to deposit for collection any refuse or garbage not produced at the address from which collection is made or to bring any refuse or garbage into the city or from one address to another in the city for the purpose of taking advantage of the collection service. It shall also be unlawful for any resident to deposit refuse or garbage for residential collection service, which refuse was produced by any professional or business enterprise engaged in by the resident.

(6) It shall be unlawful to store or place for residential collection with household rubbish any of the materials defined as "noncollectible waste".

21.320 <u>Industrial and Commercial Properties</u> --- It shall be the responsibility of the owner or occupant of all commercial and industrial properties to dispose of all refuse produced by an industrial or commercial process by contracting for the collection, conveyance and disposal with an authorized commercial collector or collecting, conveying, and disposing of such refuse with his own vehicles or contracting for the collection conveyance, and disposal with the municipal collection service, if available; providing however, that all such collections must be in accordance with the other conditions of this Chapter. For purposes of this Article all buildings with seven (7) or more dwelling units shall be treated as commercial properties. Any commercial or industrial property having such refuse collected and removed by the municipal collection service shall pay for city sticker in accordance with the terms and conditions provided by residential customers. In instances where the hours of collection are governed by the terms of a special use permit, the owner of such property shall post in a conspicuous place close to the collection point a permanent sign setting forth the authorized collection hours. The erection of such signage shall be a condition of the continuation of such special use permit. Thereafter, the driver collecting for such property shall be charged personally with responsibility for observing such collection hours, subject to the penalty provisions of Chapter 32 of this code.

21.321 <u>Sticker Rates</u> ---

(1) **Generally**: There shall be and there is hereby established a sticker rate as follows:

Large Disposal Bag ---------- $1.00 each (2 stickers)
(Over 16 gallon size)

Small Disposal Bag ---------- $0.50 each (1 sticker)
(Up to 16 gallon size)

(2) **Transition** The foregoing rates shall be effective immediately upon the passage and approval of this ordinance. Said rates shall be charged by the city for all stickers sold by the city subsequent to the passage and approval of this ordinance. All stickers purchased prior to the effective date of said rate change, whether by vendors or retailers (for sale to the public) or by city residents, are and shall remain valid stickers for purposes of compliance with the provisions of this ordinance.

21.322 <u>Revenues</u> --- All movies derived from the sale of the city stickers shall be deposited in the solid waste management account and utilized for solid waste management activities including recycling and other related costs as may be determined by the City Council of the City of Quincy.

21.323 <u>Penalty</u> --- Any person, firm, or corporation who violates any of the provisions of this title shall, in addition to such other relief as the law may afford, be punishable as set forth in Chapter 32 of this Code.

ARTICLE IV OTHER REGULATIONS

Section 21.401 **Unwholesome food** --- It shall be unlawful to sell or offer for sale any unwholesome or polluted food or drink of any kind in the city.

21.402 **Sanitary regulations** --- All premises used in the sale, processing or storage of food or drink intended for human consumption shall be kept in a clean and sanitary condition. It shall be unlawful to permit any person who is afflicted with a contagious disease to handle any food or drink intended for sale or for any such person to handle such food or drink. All such premises shall be kept free from flies and vermin of all kinds.

21.403 **Watercourses** --- It shall be unlawful and a nuisance for any person to obstruct or pollute any watercourse or source of water supply in the city contrary to any applicable law.

21.404 **Pools** --- Any stagnant water or pool of stagnant water in the city is hereby declared to be a nuisance.

21.405 **Refuse** --- It shall be unlawful for any person to deposit any where in the city any uncovered pile of refuse, garbage, offal, or the carcass of any dead animal. Such refuse must be burned in a properly constructed and operated incinerator, or otherwise disposed of. Any uncovered pile of refuse is hereby declared to be a nuisance.

21.406 **Cemeteries** --- It shall be unlawful to establish cemeteries or a cemetery within the city limits without a permit therefore from the City Council; and it shall be unlawful to bury any person within the city except in an established cemetery.

21.407 **Premises** --- It shall be unlawful to permit any building, structure or place to be or remain in such condition as to be dangerous to the public health or safety in any way. Any such building, structure or place is hereby declared to be a nuisance.

21.408 **Acts** --- It shall be unlawful to commit or do any act which endangers the public health or results in discomfort to the public.

21.409 **Drinking cups** --- It shall be unlawful to maintain any common drinking cup, dipper or other similar utensil for the use of more than one person in any public hall, theater, store or other place frequented by the public.

21.410 **Serving food** --- Utensils for personal use in all places serving food or drink to the public shall be thoroughly cleaned and sterilized after each such use.

21.411 (Reserved)

21.412 **Spitting** --- It shall be unlawful to spit or expectorate on any public sidewalk, or on the floors or walls of any store, theater, hall, public vehicle or other place into which the public is invited.

21.413 <u>Dense smoke and odor</u> --- It shall be unlawful to cause or permit the emission of dense smoke or odor from any fire, chimney, engine, oil burner, or other agency in the city so as to cause annoyance or discomfort to the public. For the purpose of testing and grading the density of smoke the Ringleman Smoke Chart, as published and used by the United States Geological Survey, shall be and is hereby adopted as a standard for such grading, and smoke shall be and is hereby defined and declared to be dense smoke when it is of a degree of density of number three as classified by that chart or of any greater degree for more than six minutes in any one hour, whether such period of time is consecutive or not. Provided further, that, fly ash or dust shall not exceed 83 pounds per 1,000 pounds of gas of which not to exceed 5 pounds per 1,000 pounds shall be of such size as to be retained in a 325 mesh United Standard.

21.414 <u>Penalty</u> --- Any person, firm or corporation who violates any of the provisions of this title shall, in addition to such other relief as the law may afford, be punishable as set forth in Chapter 32 of this Code.

ARTICLE V OPEN BURNING

Section 21.501 <u>Definitions</u> --- For the purpose of this Article, whenever the following words or terms are used herein, they shall have the meaning ascribed to them in this Section.

(1) **Garbage**: Refuse resulting from the handling, processing, preparation, cooling, and consumption of food or food products.

(2) **Open burning**: The combustion of any matter in such a way that the products of the combustion are emitted to the open air without originating in or passing through equipment for which a permit could be issued under the Illinois Environmental Protection Act or other applicable state or federal regulations.

(3) **Person**: Any individual, partnership, co-partnership, firm, company, corporation, association, joint stock company, trust, estate, political subdivision, state agency, or any other legal entity, or their legal representative, agent or assigns.

(4) **Refuse**: Any discarded matter, including garbage; or any matter which is to be reduced in volume, or otherwise changed in chemical or physical properties in order to facilitate its discard, removal or disposal.

(5) **Landscape waste**: Any accumulation of grass or shrubbery cuttings, tree limbs and other materials accumulated as the result of the care of lawns, shrubbery, vines and trees, but not including leaves.

21.502 <u>Prohibition</u> ---

(1) No person shall cause or allow the open burning of refuse or leaves, except as provided in Section 21.503 of this Article.

(2) No person shall cause or allow the burning of refuse in any chamber, apparatus or container, unless a permit has been issued under the Illinois Environmental Protection Act for such chamber, apparatus or container authorizing and permitting the burning of refuse in the same.

(3) No person shall cause, build or light any fire so close to any building or structure as to endanger such building or structure, or on any public street, alley, or sidewalk or between the sidewalk and the public street.

21.503 <u>Exemptions</u> --- The following activities are not in violation of this ordinance.

(1) The setting of fires to combat or limit existing fires, when reasonably necessary in the judgment of the responsible government official;

(2) The burning of fuels for legitimate campfire, recreational, and cooking purposes, or in domestic fireplaces, in areas when such burning is consistent with other laws, provided that no garbage shall be burned in such cases;

(3) The burning of waste gases, provided that in the cases of refineries all such flares shall be equipped with smokeless tips or comparable devices to reduce pollution;

(4) Small open flames for heating tar, or welding, acetylene torches, highway safety flares, and the like;

(5) Open burning conducted in accordance with a permit granted by the Environmental Protection Agency of the State of Illinois.

21.504 <u>Permit required</u> --- It shall be unlawful to cause or allow the open burning of landscape waste without having an open burning permit or in violation of the terms of such permit.

21.505 <u>Application</u> --- Applications for such open burning permits shall be made to the Fire Chief in writing signed by the applicant, and shall contain the following statements and information:

(1) The name, age, address and telephone number of the applicant.

(2) The address of the burning site.

(3) The quantities and types of items to be burned.

(4) The methods or actions to be taken to control or extinguish the fire.

(5) Statement of why alternatives to open burning are not available.

(6) Proposed date of the open burning.

(7) Statement as to whether or not residents in areas near the burning site have been notified.

(8) A sketch of the open burning site showing distances to the nearest residences, fire hydrants, streets or alleys, schools and any other structure of any kind which is near such site.

21.506 <u>Restrictions</u> --- Open burning of landscape waste and the issuance of permits for such open burning shall be subject to the following restrictions:

(1) Permit applications must be submitted at least seven days in advance of the proposed burning date.

(2) Permits are valid only for the location and date stated on the permit and are not transferable.

(3) Such open burning shall be allowed only on the premises on which such landscape waste is generated.

(4) The location of the open burning site shall be at least fifty feet (50') from any building or any other structure, including fences, etc.

(5) The burning shall be between the hours of 8:00 a.m. and 6:00 p.m., and the fire shall be completely extinguished by 6:00 p.m.

(6) The fire shall be attended at all times by a competent person of at least 18 years of age.

(7) There shall be fire extinguishing equipment and water supply at the burning site sufficient to completely extinguish the fire in a reasonable period of time. The extinguishing agent must be capable of causing the fire to immediately start to go out upon application of such agent.

(8) Water hoses shall be equipped with nozzels and the hose shall be maintained charged during the period of such burning.

(9) Such fire shall be limited in size to an area of no more than twenty-four (24) feet (24') in diameter and shall not exceed six feet (6') in height.

(10) The Fire Chief may refuse to issue such permits or revoke such existing permits if the Fire Chief or his designate determines that weather conditions make such open burning dangerous to life or property.

21.507 **<u>Penalty</u>** --- Any person, firm or corporation who violates any of the provisions of this title shall, in addition to such other relief as the law may afford, be punishable as set forth in Chapter 32 of this Code.

CHAPTER 22

ANIMALS

ARTICLE I	**GENERAL PROVISIONS**
ARTICLE II	**DOGS**
ARTICLE III	**CATS**
ARTICLE IV	**MISCELLANEOUS ANIMALS**
ARTICEL V	**IMPOUNDING ANIMALS RUNNING AT LARGE**
ARTICLE VI	**RESTRICTED ANIMALS**
ARTICLE VII	**PERMITS FOR TRAVELING EXOTIC ANIMAL EXHIBITS, CIRCUS AND PETTING ZOONS**
ARTICLE VIII	**ANIMAL CONTROL COMMISSION**
ARTICLE IX	**PENALTY**

ARTICLE I GENERAL PROVISIONS

Section 22.101 <u>Definitions</u> --- As used in this Chapter, the following terms shall have the meanings herein ascribed unless the context otherwise requires:

"**Animal**" means any living organism other than a human being or, those commonly considered plants whether domestic or wild.

"**Animal Control Officer**" means the person appointed by the Mayor, with the advice and consent of the City Council, as Animal Control Officer of the Quincy Animal Shelter for the purposes of administering these regulations. Such person shall be a salaried employee of the city and shall not be eligible for additional compensation for off-duty calls or other work at the Quincy Animal Shelter. Such person shall report to the Chief of Police or his designee. The Superintendent in addition to his duty to administer these regulations shall endeavor to enact and maintain practices to encourage the adoption of animals and to keep the Quincy Animal Shelter as clean as possible and in as good condition and repair as is economically feasible.

"**Dangerous Dog**" means a dog as defined in Section 22.203(1)(a) of this Code.

"**Owner**" means any person, firm or corporation owning, keeping, maintaining, housing or harboring any animal or animals. For purposes hereof, "keeping" or "maintaining" shall include, but not be limited to, regularly feeding or watering any animal or animals.

"**Person**" means a person, firm or corporation.

"**Vicious Dog**" means a dog as defined is Section 22.203(1)(e) of this Code.

22.102 <u>Cruelty to animals prohibited</u> ---

(1) **Generally**: No person or owner or person having custody of any animal shall treat any animal cruelly in any manner. The following acts shall be deemed to be examples of cruelty to animals and are not intended to be a complete list of acts which may constitute cruelty.

(a) By overloading, overdriving, overworking, beating, torturing, tormenting. mutilating or killing, any animal, or cause or knowingly allow same to be done;

(b) By cruelly working any old, maimed, infirm, sick or disabled animal, or cause or knowingly allow, same to be done;

(c) By failing to provide any animal in his care or custody with proper food, water, air and sanitary shelter, such shelter to be sufficient to provide adequate bedding and protection from the weather and space within sufficient for the animal to stand in an upright position and lie down stretched out so that no part of its body need touch the sides of the shelter structure;

(d) By failing to provide necessary, veterinary attention to sick animals in need which are in any persons care or custody;

(e) By abandoning any animal where it may become a public charge or may suffer injury, hunger, thirst or exposure;

(f) By carrying, keeping, driving or causing to be carried, driven or kept, any animal in a cruel manner;

(g) By leaving or confining any animal in a motor vehicle, trailer or other enclosure in such a manner that it places the animal in a life or health threatening situation due to exposure to heat or cold, without sufficient ventilation or other protection from such heat or cold;

(h) By beating, cruelly ill treating, tormenting, abusing, wounding or killing, or attempting to wound or kill, or by knowingly poisoning or causing to be poisoned, any animal,

with the exception of cats and mice, and then only by using approved Department of Agriculture poison appropriate for rodents;

(i) By tethering any animal to a fixed object unless such chains, ropes or leashes are so placed or attached that they cannot become entangled with another animal or object, and shall be of sufficient length in proportion to the size of the animal to allow the animal proper exercise and convenient access to food, water and shelter. Such tethering shall be located so as not to allow such animal to trespass on public property or private property belonging to others, nor in such a manner as to cause harm or danger to persons or other animals.

(2) **Impoundment**: No right to redeem animal: When an animal control officer or a police officer finds a violation of this Section which has resulted in an animal being in such condition that no remedy or corrective action by the owner or person in custody, is reasonably possible, or if the owner fails or refuses to provide such remedy or corrective action, an animal control officer or a police officer shall have the right to enter upon private property or public property in the city to examine and/or remove and impound such animal therein. Upon such determination and impoundment, the owner or person otherwise responsible for said animal (owner/custodian) shall have no right of redemption from impoundment as to such animal. No such officer will have the right to enter a private dwelling for this purpose without a valid search warrant or other lawful process. The owner or person otherwise responsible for said animal shall be strictly liable for all expenses incurred in taking possession of and impounding the animal.

(a) **Notice and review**: The owner or person in custody of an animal impounded under this Subsection (2) shall be provided written notice of the impoundment of the animal, which notice shall inform the owner/custodian of the determination and finding of the animal control officer and/or police officer and that the owner/custodian shall not have the right to redeem said animal from impoundment by reason thereof. The owner/custodian of the animal may appeal such determination and finding to terminate the right to possess the animal to the Chief of Police, provided that the owner/custodian delivers a written request for review to the Chief of Police within (7) days of the date of impoundment of the animal. The Chief shall promptly set the matter for review and give notice to the owner/custodian of the time, date and place of the review, at which time the owner/custodian shall have the opportunity to appear to be heard on the determination to terminate the owner/custodian's right to possess and redeem the animal. After any such review, the Chief shall render a written decision, affirming, reversing or modifying the termination of the right of possession and redemption of the animal. Said written decision shall be promptly mailed to the owner/custodian (at the address provided by the owner/custodian) or delivered personally thereto. Such review and/or decision by the Chief of Police shall not stay nor be binding as to any other prosecution for violations of this Code or other laws or regulations with respect to said animal.

(3) If the owner cannot be located after a reasonable search, or if the owner shall be known to be absent due to illness, incarceration or other circumstances, an animal control officer or a police officer shall have the right to enter upon private property or public property in the city to examine and/or remove and impound such animal therein. No such officer will have the right to enter a private dwelling for this purpose without a valid search warrant or other lawful process. The owner shall be held strictly liable for all expenses incurred.

22.103 (Reserved)

22.104 <u>Dangerous or vicious animals</u> ---

(1) **Animals other than dogs**:

(a) It shall be unlawful to cause or permit any dangerous or vicious animal to run at large within the city.

(b) It shall be unlawful to house or bring into the city any dangerous or vicious animal without first securing a permit to do so from the Chief of Police, or the Animal Control Officer, which permit may impose precautions or conditions necessary for the protection of persons and property.

(c) Exhibitions or parades of animals which are ferae naturae (of a wild nature or disposition) in the eyes of the law may be conducted only after securing a permit from the Chief of Police or the Animal Control Officer.

(2) **Dangerous or vicious dogs**: Dangerous or vicious dogs shall be subject to the regulations, restrictions and provisions of Article II of this Chapter 22.

22.105 <u>Killing dangerous animals</u> --- The Chief of Police, or the Animal Control Officer, and the members of the Police Department may kill any dangerous or vicious animal including dogs within the city of any kind when necessary for the protection o persons or property. Such animals shall, if reasonably possible, be killed by means other than shooting such animal in the brain so as to preserve the brain for laboratory determination of whether such animal had contracted rabies. Any such animal shall be preserved as necessary for such rabies determination.

22.106 <u>Animal noises - nuisances</u> ---

(1) The owner or keeper shall not suffer or permit any animal to bark, howl, cry, or make other distressing or loud or unusual noise or to disturb the peace or quiet of any place, neighborhood, family, or person in the city in a substantially consistent manner. The disturbing of any neighborhood or persons by any such animal is declared to be a nuisance.

(2) If the owner or keeper of an animal causing a repetitious disturbance cannot be located after a reasonable search, or if the owner shall be known to be absent due to illness, incarceration or other circumstances, the animal may be removed by an animal control officer or a police officer and impounded, provided, however, that an animal control officer or a police officer shall obtain necessary legal process to enter into any premises used as a residence to take possession and remove such animal. Further, the owner or keeper of said animal shall be held strictly liable for all expenses incurred.

(3) The repetitious disturbance of any place or neighborhood or person in the city is hereby declared as nuisance and no person shall suffer or permit any nuisance to exist. In the case of a repeat offense, the city may petition the Circuit Court for any order to destroy the animal.

22.107 <u>Diseased animals</u> ---

(1) No diseased animal shall be brought into the city.

(2) No domestic animal afflicted with a contagious or infectious disease shall be allowed to run at large or to be exposed in any public place whereby the health of man or other animal may be affected, nor shall any such diseased animal be shipped or removed from the premises of the owner or keeper thereof, except under the supervision of the Chief of Police, or the Animal Control Officer, or the state veterinarian.

(3) It shall be the duty of the Chief of Police, or the Animal Control Officer, to secure the disposition of any diseased animal and to provide such treatment of any infected premises so as to prevent the communication and spread of the contagious infection, except where the state veterinarian is empowered to and does act or where the owner employed a veterinarian to provide such treatment. Any person owning or knowing of any animal afflicted with a suspected or confirmed contagious or infectious disease shall promptly report such information to both the Quincy Police Department and the Adams County Health Department.

22.108 <u>Animal housing</u> ---

(1) No person shall cause or allow any stable or place where any animal is or may be kept to become unclean, filthy or unwholesome.

(2) It shall be unlawful to maintain any stable or barn where horses or ponies are kept unless the following provisions are complied with:

(a) The stable or barn must not be located within one hundred and fifty (150) feet of any residence or within fifty (50) feet of any other building;

(b) The stable or barn must be of construction complying with all building codes of the city, with proper drainage connected to the sanitary sewer: and,

(c) A manure box of cement construction, with a tight cover, must be provided, and all refuse herein removed from the premises at least once each week.

(3) It shall be unlawful to stable or house cattle, swine, pigs, burros, mules, sheep, goats or similar animals within the city.

22.109 <u>Search and seizure in pursuit</u> --- The Chief of Police, or the Animal Control Officer, and any police office of the city shall have the right to enter upon any private property or public property in the city in order to examine or capture any dog, cat or other animal thereon or therein which such officer reasonably believes to be in violation of this Chapter; provided, however that no such officer shall have the right to enter any house which is in use as a residence without first having secured a search warrant therefore.

22.110 <u>Rabies control</u> ---

(1) **Generally**: The City Council has determined that the existence of and the spread of rabies throughout the City of Quincy and its environs present a danger of the public health, safety and welfare. These provisions have, accordingly, been adopted. They shall apply in addition to any other rules, regulations or laws established in this chapter, by state law or otherwise. In the event of any conflict, the most restrictive provision shall apply.

(2) **Animal Control Act**: The owner of any dog, cat or other animal and other persons to which the Animal Control Act of the State of Illinois (Ill. Rev. Stat., ch. 8, par. 351, et seq.) shall apply, are specifically required to comply with all the provisions thereof as they pertain to rabies and rabies control to the same extent as if the same were set forth fully herein.

(3) **Prevention of spread of rabies**: Whenever a case of rabies has occurred within the City of Quincy, or whenever the Mayor is apprehensive of the spread of rabies, the Mayor is hereby authorized and empowered to take all such actions as may be necessary to prevent its spread or otherwise necessary to protect the public health, safety and welfare. The Mayor may, among other actions, order that all dogs, cats or other animals in the City of Quincy be kept confined within an enclosure, or kept muzzled and restrained by leash; that all owners of dogs,

cats or other animals take prophylactic measures as the Mayor deems necessary to prevent the spread of rabies; or other measures as may be necessary to control the spread of rabies. The Mayor may also determine the area of the city in which, and the period of time during which, such orders shall be effective.

22.111 <u>Animals running at large</u> --- It shall be unlawful for any person owning or having possession, charge, care, custody or control of any animal to allow the animal to run at large or upon private property of another or in or upon a street, alley or public place within the city. For the purpose of this Chapter, an animal not physically restrained or leashed when off the premises of its owner or custodian shall be deemed running at large. The provisions of this section shall not prohibit the owner or keeper from permitting such animals to run (loose) upon the private premises of another person with such person's consent, so long as otherwise consistent with this Chapter including specifically the provisions for confinement of vicious and dangerous dogs. Except as otherwise provided herein, animals may be permitted to run upon public ways, including streets and sidewalks, but only when on a leash not exceeding ten (10) feet in length and controlled by the owner or keeper of the animal. If an animal is running at large through the act or intervention of a third person not a member of the owner's household and without the owner's consent, such fact shall be and constitute an affirmative defense to a violation of this section.

22.112 <u>Running at large; nuisances</u> --- No person owning, possessing or harboring any animal with the city shall permit such animal to become a nuisance. Any animal, other than a dog trained for law enforcement in the performance of its duties, shall be considered a nuisance if such animal:

(1) Causes repeated unreasonable disturbances or substantial damage to a non-owner's property;

(2) Causes unsanitary, dangerous or unreasonably offensive conditions which represent a threat to the public health, safety or welfare;

(3) Chases vehicles on a public right of way;

(4) Without provocation, chases, molests, attacks, bites or unreasonably interferes with any person lawfully on the premises of its owners;

(5) Without provocation, chases, molests, attacks, bites or unreasonably interferes with any person while off the premises of the owners;

(6) Chases, molests, attacks, bites or unreasonably interferes with other animals while off the premises of the owner.

ARTICLE II DOGS

Section 22.201 **Keeping of dogs** --- No person or persons shall keep six (6) or more dogs over six (6) months of age in the city at any place or on any premises in the city without first obtaining a permit from the City Council so to do, said Council may grant or refuse such permit in its discretion as necessary for the health, safety and welfare of the city, provided that if such permit is granted said Council may prescribe such conditions as may be advisable or necessary to prevent the keeping of any or all such dogs from becoming a nuisance. The keeping or harboring of dogs contrary to this Section is hereby declared to be a nuisance. This limitation shall not apply to a licensed veterinarian relative to a veterinary hospital or clinic maintained and operated by the licensed veterinarian. No charge shall be made for any permit issued hereunder.

22.202 **Muzzling of dogs** --- The Mayor by proclamation may require the owners of all dogs to securely muzzle them with muzzles of wire, gauze, or leather, securely put on, so as to prevent them from biting for such length of time as the Mayor shall designate, whenever in the opinion of the Mayor there exists a reasonable necessity for such muzzling as a protection of the public safety. Dogs unmuzzled and running at large during such period shall be destroyed. In addition to such muzzling of dogs, the Mayor may also, under such proclamation, order the retention of all dogs on the owner's premises or at designated public places such as veterinary establishments, and such proclamation may include muzzling such dogs while so restrained.

22.203 **Dangerous or vicious dogs** ---

(1) **Definitions**: For purposes of this Chapter the following words and terms shall have the meanings described hereafter.

(a) "**Dangerous dog**" means any individual dog which when unprovoked and is either unmuzzled, unleashed, or unattended by its owner, or a member of its owner's family, in a vicious or terrorizing manner, approaches any person in an apparent attitude of attack upon streets, sidewalks, or any public grounds or places;

(b) "**Enclosure**" means a fence structure of at least 6' in height, forming or causing an enclosure suitable to prevent the entry of young children, and suitable to confine a. vicious dog in conjunction with other measures which may be taken by the owner or keeper, such as tethering of a vicious dog. Such enclosure shall be securely enclosed or locked and designed with secure sides, top and bottom and shall be designed to prevent the animal from escaping from the enclosure; a house, or building shall not constitute an enclosure within the meaning of this Section if window are open or if screen windows or doors are the only obstacle preventing a vicious dog exiting the house or building. Such enclosure shall have attached thereto or displayed on the premises where the enclosure is located a sign designating or warning that a vicious dog is located on the premises. Such sign shall be located so as to be clearly visible from any street, sidewalk or other public right-of-way adjacent to the premises;

(c) "**Impounded**" means taken into the custody of the Animal Control Officer or the Quincy Animal Shelter;

(d) "**Run line**" means a system of tying a dog in place with either rope or chain having a tensile strength of at least 300 pounds.

(e) "**Vicious dog**" means:

1.) Any individual dog that, when unprovoked, inflicts bites or attacks a human being or other domestic animal either on public or private property;

2.) Any individual dog with a known propensity, tendency or disposition to attack without provocation, to cause injury or to otherwise endanger the safety of human beings or domestic animals;

3.) Any individual dog which attacks a human being or domestic animal without provocation;

4.) Any individual dog which has been found to be a "dangerous dog" upon 3 separate occasions;

5.) No dog shall be deemed "vicious" if it bites, attacks, or menaces a trespasser on the property of its owner or harms or menaces anyone who has tormented or abused it or is a professionally trained dog for law enforcement or guard duties.

(2) **Vicious dogs - confinement**: It shall be unlawful for any person to keep or maintain any dog which has been found to be a vicious dog unless such dog is at all times kept in an enclosure. The only time that a vicious dog may be allowed out of the enclosure is (1) if it is necessary for the owner or keeper to obtain veterinary care for the vicious dog; or (2) to comply with the order of a court of competent jurisdiction, provided that said vicious dog is securely muzzled and restrained with a chain having a tensile strength of 300 pounds and not exceeding 3 feet in length, and shall be under the direct control and supervision of the owner or keeper of the vicious dog.

Any dog which has been found to be a vicious dog and which is not confined to an enclosure shall be impounded by the law enforcement authority having jurisdiction in such area and shall be destroyed as provided in Article V of this Chapter 22.

No owner or keeper of a vicious dog shall sell or give away any vicious dog.

(3) **Dangerous dogs**:

(a) **Generally**: It shall be unlawful to keep or maintain any dangerous dog, unless the same is confined in a fence, a house, or structure (but not necessarily an enclosure as defined herein) or on a run line, so as to prevent the dog from escaping the confinement. A dangerous dog may be permitted outside the premises of the owner or keeper provided it is securely restrained by a leash no longer than five (5) feet in length and the leash is in the physical control of a person of sufficient age and physical strength to control and restrain the dog.

(b) **Guard or sentry dogs**: Any person keeping or maintaining any guard or sentry dog on any commercial or industrial or manufacturing premises shall register the dog with the Animal Control Officer, providing a photograph of the dog and such information regarding the age, breed, gender and location of the dog as determined necessary by the Animal Control Officer. It shall be the duty of the owner of such guard or sentry dog to notify the Animal Control Officer of any change of address of the owner and the present location where such dog will be stationed. The Animal Control Officer shall provide police and fire departments with a categorized list of such exempt dogs, and shall promptly notify such departments of any address changes reported to him.

(c) **Exemption**: Dangerous dogs, as otherwise defined herein shall not include, guide dogs for the blind or hearing impaired, support dogs for the physically handicapped, or police-owned dogs provided an attack or injury to a person occurs while the dog is performing duties as expected. To qualify for exemption under this Section, each such dog shall be currently inoculated against rabies as required by this Code or State Statute. It shall be the duty of the

owner of such exempt dog to register the dog with the Animal Control Officer, provided a photograph of the dog and such information regarding the age, breed, gender and location of the dog as determined necessary by the Animal Control Officer. It shall be the duty of the owner of such exempt dog to notify the Animal Control Officer of any change of address. The Animal Control Officer shall provide police and fire departments with a categorized list of such exempt dogs, and shall promptly notify such departments of any address changes reported to him.

(d) **Violation**: Any dangerous dog which is not confined in a fence, house, structure or on a run line or attended to by a leash as provided herein shall be taken up and impounded as provided in Article V, hereof.

However, in addition to the requirements and regulations of said Article V, the Chief of Police, or the Animal Control Officer may continue the impoundment of said dangerous dog until the owner thereof provides verification to the Animal Control Officer by the means by which said dog will be confined in accordance with this Code. If the owner fails to provide such verification of the manner and means by which said dog will be confined within seven days of the impoundment, the dog shall be destroyed as provided in Article VI. Any dangerous dog which is impounded three (3) times within any twelve month period is deemed a public nuisance and shall be destroyed as provided in this Code.

22.204 <u>Dog bite</u> ---

(1) **Generally**: Any dog which does not have a current rabies vaccination and shall bite any person or injure any person shall be kept under the observation of a licensed veterinarian or the Quincy Animal Shelter, for a period of ten (10) day and the veterinarian, or the Quincy Animal Shelter, shall at the end of the ten (10) day period make a written report to the Adams County Department of Health and should said dog show evidence of rabies, then it shall be killed in a humane manner. In the event the dog, other than a vicious dog, is pronounced free from rabies by the veterinarian, or the Quincy Animal Shelter, then said dog shall be released to the owner or keeper upon the payment of the veterinarian's, or Animal Shelter's, fee provided the owner shall provide verification to the Animal Control Officer of the manner and means by which said dog shall be confined in an "enclosure" as defined in Section 22.203(1)(b) above. The owner of the dog may claim the same at the end of the ten (10) day period by making payment of the costs involved while the dog is under observation and also the costs of a license if said dog is not licensed. If the owner does not claim the dog at this time then said dog shall be killed in a humane manner.

(2) **Vicious dog**: Notwithstanding the foregoing, any vicious dog which bites any person or causes other severe or permanent injury to any person shall be destroyed as provided in this Code.

22.205 <u>Female dog in heat</u> --- Every females dog in heat shall be confined in a building or secure enclosure in such manner that such female dog cannot come into contact with another animal except for planned breeding.

22.206 (Reserved)

22.207 (Reserved)

22.208 <u>Prohibited use of dogs for fighting or entertainment</u> ---

(1) It shall be unlawful to own, keep, capture, breed, train or lease any dog or other animal for purpose of fighting another dog or other animal or for other entertainment purposes prohibited under any rule, regulation or law of the State of Illinois.

(2) No person shall promote, stage, hold, manage, conduct. or carry on any animal fight, or train any animal for the purpose of an animal fight or any other type of contest game or fight of a similar nature, nor any simulated version of game that involves baiting or inciting an animal to fight.

22.209 <u>Enforcement</u> --- The Animal Control Officer, the agents or employees of the Animal Control Officer and/or officers of the city police department are authorized to go upon private property in order to enforce this ordinance, including taking and impounding any dog at large or not confined as required herein (even if not running at large) or found without required inoculation licensing or identification tags, provided such persons may not enter a private dwelling house for this purpose without the consent of the occupant or a valid warrant.

22.210 <u>Removal of waste material</u> --- No person shall permit a dog to be upon the public ways or within public places or upon the property of another, absent that person's consent, without some means for the removal of excrement of the dog; nor, shall any person fail to remove any excrement deposited by such dog. This action shall not apply to blind person while walking his or her guide dog.

ARTICLE III CATS

Section 22.301 **Keeping of cats** --- No person or persons shall keep six (6) or more cats over six (6) months of age in the city at any place or in any premises in the city without first obtaining a permit from the City Council so to do, and said Council may grant or refuse such permit in its discretion as necessary for the health, safety and welfare of the city, provided that if such permit is granted, said Council may prescribe such conditions as may be advisable or necessary to prevent the keeping of any and all such cats from becoming a nuisance. The keeping or harboring of cats contrary to this Section is hereby declared to be a nuisance. This limitation shall not apply to licensed veterinarian relative to a veterinary hospital or clinic maintained and operated by the licensed veterinarian. No charge shall be made for any permit issued hereunder.

22.302 **Female cat in heat** --- Every female cat in heat shall be confined in a building or secure enclosure in such manner that such female cat cannot come into contract with another animal except for planned breeding.

22.303 **Inoculation against rabies** --- Every owner of a cat four (4) months of age or older shall cause such cat to be inoculated against rabies by a licensed veterinarian on or before July 1, 2004, and at least once every twelve (12) months thereafter. Evidence of such rabies inoculation shall be entered on a certificate, the form of which shall be approved and furnished by the Superintendent of the Illinois Department of Agriculture and which shall be signed by the licensed veterinarian administering the vaccine. The City Clerk shall cause a car rabies inoculation tag to be issued upon the filing of such certificate with the City Clerk. Such tags shall expire on the same date as the animal's rabies inoculation certificate. The owner of any cat shall cause such cat to wear, at all times, such tag. Rabies vaccine for use on animals shall be sold or distributed only to and used only by licensed veterinarians. Such rabies vaccine shall be licensed by the United Stated Department of Agriculture and approved by the Department of Agriculture of the State of Illinois.

ARTICLE IV MISCELLANEOUS ANIMALS

Section 22.401 **Strays** --- It shall be unlawful for any person having charge or custody of any cattle, horses, swine, pigs, sheep, goats, reptile, poultry, or similar animal, to permit such animal to run at large in the city. Notwithstanding anything herein to the contrary, this Section is not intended to permit animals within the city otherwise prohibited in this Chapter, but to restrict such animals from running at large if allowed by permit or otherwise by this Chapter.

22.402 **Breeding of livestock** --- No person shall cause or permit the breeding of livestock in any place other than a completely enclosed structure with no portion of the inside thereof open to public use or view.

22.403 **Horses** --- No person shall cause on permit any horse owned by him or under his control to be upon any of the sidewalks located within the limits of the city.

22.404 **Fowl** --- No person shall cause or permit any chickens, other poultry or fowl owned or kept by him within the city to constitute an extreme nuisance, including but not limited to the causing of undue and repeated disturbance, or an unreasonable sanitation or health problem. Whenever an unreasonable sanitation or health problem exists in a residential area, the Minimum Housing Superintendent, Chief of Police, the Animal Control Officer, or the Adams County Health Department may require the removal of such animals from the premises.

22.405 **Rabbits** --- No person shall cause or permit any rabbits owned or kept by him within the city to constitute an extreme nuisance, including but not limited to the causing of undue and repeated disturbance, or an unreasonable sanitation health problem.

ARTICLE V IMPOUNDING ANIMALS RUNNING AT LARGE

Section 22.501 **Impoundment** --- It shall be the duty of the Chief of police, or the Animal Control Officer, and of all policemen of the city, to take up and impound any dog, cat or other animal found running at large in the city contrary to any of the provisions of this Chapter, or other applicable ordinance, order or proclamations. Animals so impounded shall be humanely treated and fed. All such animals and such violations shall be processed and disposed of in accordance with this Article, unless otherwise specifically provided for by ordinance.

22.502 **Impoundment fees** --- Any owner or other person reclaiming an impounded dog, cat or other animal shall pay a fee of $5 if the animal is neutered or spayed (herein altered) or $20 if the animal is unaltered, plus $10 for each and every day, or portion thereof, the animal has been impounded (excluding the initial day of impoundment), which fee shall be payable to the City of Quincy. The owner of an unaltered animal shall be entitled to a refund of $15 if, within sixty (60) days of the impoundment, the animal is altered and proof of alteration provided to the Animal Control Officer. Any spay/neuter deposit refunds not claimed by the owner within sixty (60) days of impoundment shall be turned over to the city to be placed in the General Fund. In the event the owner or person reclaiming the animal has been noted for violating Section 22.111 (Animals Running at Large) and such notice is dismissed or the owner is found not guilty, any impoundment shall be returned to such persons. Any owner or other person reclaiming a dog or car impounded for a violation of Section 22.111 for a second time in any twelve (12) month period shall pay an impoundment fee of $20. The impoundment fees stated above shall be increased by twice the amount of the impound fee last assessed for each instance in any twelve (12) month period that the same animal is impounded for a violation of Section 22.111.

22.503 **Notices** --

(l) **Notice of violation**: In addition to, or in lieu of, impounding any dog, cat or other animal running at large in violation of this Chapter, the Chief of Police, the Animal Control Officer, or any police officer may promptly issue a notice of violation to any person violating Section 22.111.

(2) **Notice of impoundment**: In the event that the dog, cat or other animal has been impounded, a notice shall be given to the owner, if known. Such notice should advise the owner of the impoundment. The notice shall be in substantially the following form:

NOTICE OF IMPOUNDMENT

You are notified that in accordance with Section 22.501 of the Municipal Code of Quincy, that on _____, 200___ at _____ o'clock ___.m., an animal owned or kept by you was impounded at (location) . To reclaim such animal, you are required to pay an impoundment fee of $5, (NOTE: Impound fee increases for repeated violations within a twelve (12) month period), plus $10 for each and every day, or portion thereof, the animal is impounded. The animal may be destroyed or otherwise disposed of unless you reclaim the animal within four (4) days of the date and time of impoundment stated above. If the last day of reclaim for any impounded

animal shall fall on a day that the facility is not open, such date shall be extended to the next day the facility is open for business.

Dated: This _____ day of _____ . _____ .

_____

Title: _____

22.504 <u>Reclaiming and disposing of animals</u> ---

(1) **Generally**:

(a) **Impoundment fee and rabies inoculation:** Except as specifically provided in this Code, an owner of any animal impounded may reclaim such animal within four (4) days of its impoundment, if the owner is known or the animal is tagged with a rabies tag, city registration tag and/or nametag (hereinafter tagged), or three (3) days if owner is not known and the animal is untagged, provided such owner has paid the impoundment fee established by Section 22.502 above and such owner has, if applicable (such as in the case of a dog or cat), presented proof of current rabies inoculation and registration, or pays for and allows such animal to be inoculated against rabies. This paragraph shall not prevent charging such owner with violation of any provision of this Chapter or limit the responsibility of the owner.

(b) **Deferral of impoundment fee**: The owner of any animal impounded pursuant to this Chapter may request that the payment of any impoundment fees hereunder be deferred until after such owner has had the opportunity for a court hearing relative to the alleged violation of this Chapter. Any such request shall be accompanied by a statement from the owner acknowledging such fees and that they are payable if the owner is in actual violation of this Chapter. If such a request if made, a notice of violation shall if issued and served upon the owner, setting forth the violation charged and the court appearance date. In the event such owner pleads guilty or is found guilty of the appropriate violation of this Chapter, such impoundment fees shall be payable in addition to any fine assessed by the court. The court shall require the payment of such impoundment fees in the same manner as any fine imposed upon proof of the impoundment fees. The filing of a statement of the owner shall be considered sufficient proof. The statement required may be in substantially the following form:

ACKNOWLEDGEMENT OF IMPOUNDMENT FEES

I, the undersigned, being the owner of a certain dog, cat or other animal impounded by the City of Quincy, acknowledge that impoundment fees are claimed by the City of Quincy in the amount of $_____. These fees were incurred for a period beginning on the _____ day of _____, 20____, and ending on the _____ day of _____, 20_____. If I plead guilty or am found guilty of violating the applicable provisions of Chapter 22 of the Municipal Code of the City of Quincy, I recognize that such amount shall be payable along with any fine assessed against me by the court.

Dated: This _____ day of _____ , 20 _____ .

_____

Owner

(1) **Receipt:** Payment in the amount of $ _____received this _____day of _____, 20 ____.

City Of Quincy Treasurer

By: _____

(2) **Destruction**: In addition to the provisions for destruction of animals provided under Chapter 22 of the Code, in the event any animal is not reclaimed within such four (4) days of its impoundment, if the owner is known or the animal is properly tagged, or three (3) days if the owner is not known and the animal is untagged, the Chief of Police, or the Animal Control Officer, may destroy such animal in the most humane manner practicable, or give or sell any such unclaimed animal. However, in the case of an unclaimed animal whose owner is unknown, and the third day falls on a day that the facility is not open, then such animal will not be destroyed, sold or given away until the next business day. Any diseased or vicious animal may, however, be destroyed at any time if such animal cannot be safely taken up or impounded. Any animal which is so severely injured or diseased that it would be cruel or inhumane not to destroy such animal, may be destroyed at any time provided that every reasonable effort is first made to contact to owner of such animal. If the owner is not known or cannot be located, the decision to destroy the animal shall be made only after the animal has been examined by superintendent of the dog pound. The Chief of Police or the Animal Control Officer may extend such period if the animal has bitten or scratched any person to determine if the animal has rabies. In that event, the provisions of the Animal Control Act of the State of Illinois (510 ILCS 5/1 et. seq.) shall be observed.

(3) **Immunity**: No law enforcement office or agency, or licensed veterinarian shall be held to answer or be liable for damages for such destruction in any action brought by the owner of such animal when destroyed in accordance herewith. Provided further that the Animal Control Officer or his designee shall use reasonable diligence to inform the owner of any animal impounded by mailing a notice to said owner, if known, informing said owner that his animal is being held.

(4) **Feral animals**: Any feral animal impounded for a period of seventy-two (72) hours may be destroyed by the Animal Control Officer or a representative of the city's designated shelter in a humane manner unless such animal is claimed. For purposes of this sub-section, a feral animal is one that is impounded with no identifying collar or tag and, after evaluation by the Animal Control Officer, is determined to be a wild animal or a domesticated animal which, through neglect or abandonment, has reverted to a wild state.

22.505 Enticement of animals --- No person shall entice or decoy any dog, cat or other animal out of any house or enclosed lot, or bring or cause to be brought or enticed, any dog, cat or other animal from without the city into the city for the purpose of having such animal impounded in accordance with this Article.

22.506 Hold order --- The Chief of Police, Animal Control Officer, or any police officer of the city may place a hold order on any animal impounded pending identification of the owner and/or

issuance of a notice of violation. Individuals claiming ownership of such impounded animals must provide the Animal Control Officer or police officer impounding such animal, with reliable proof of ownership and information regarding the circumstances of the animal's running at large before such animal shall be released to said owner.

ARTICLE VI RESTRICTED ANIMALS

Section 22.601 <u>Classification of restricted animals</u> --- The following animals, and all subspecies and hybrids of such animals, are classified as restricted and inherently dangerous animals:

(1) All species of orangutans, chimpanzees, gorillas, gibbons, siamangs, macaques, mandrills, drills and baboons;

(2) All species of wolves, jackals, dingos, maned wolf, red dog, African hunting dog and coyotes:

(3) All species of bears and wolverines';

(4) All species of hyenas;

(5) All species of lions, tigers, jaguars, leopards;

(6) Cheetahs, cougars, snow leopards and all wild cats, including but not limited to jungle cat, margay, caracal, serval, lynx, bobcat, clouded leopard and ocelot;

(7) All species of elephants;

(8) All species of rhinoceroses, zebra, tapir and hybrids thereof;

(9) All species of hippopotamus;

(10) African buffalo, wild Bovidae and giraffe;

(11) Kangaroos, wallabies and Tasmanian Devils;

(l2) Reptiles which are poisonous or life-threatening, including indigenous venomous snakes. For purposes of this subsection, a life threatening reptile shall include without limitation any member of the crocodilian family and any constricting snake six (6) feet or greater in length.

22.602 <u>Possession of restricted animals</u> --- It shall be unlawful for any person, corporation, partnership or other legal entity to import, transfer, sell, purchase, breed or possess a restricted animal unless that person, corporation, partnership or other legal entity holds a permit or is exempt from holding a permit under this article. It shall be unlawful for any person, corporation, partnership or other legal entity to sell, transfer, deliver or give an animal classified as restricted to any other person, corporation, partnership or other legal entity unless the other person, corporation, partnership, or other legal entity holds a permit or is exempt from holding a permit under this article.

22.603 <u>Permit applicant qualifications</u> --- Applicants for a permit to possess a restricted animal shall meet the minimum qualifications. If the applicant is a corporation, partnership or other legal entity, the applicant must designate an active officer, partner, member or other person acting on its behalf as agent to represent the organization and who meets the following minimum qualifications:

(1) Applicant or designee must be at least eighteen (18) years of age.

(2) Applicant or designee must have at least two (2) years experience in the care and handling of the animal family for which the applicant is applying.

(3) Applicant or designee shall not have been convicted of any violation of any state or federal wildlife regulations within three (3) years of the date of application, or of any offense involving cruelty to animals.

22.604 <u>Exemptions</u> --- Properly maintained and permitted zoological parks, federally licensed exhibits, circuses, scientific or educational institutions, individuals offering educational programs to the public on a regular basis, research laboratories, veterinary hospitals, animal shelters, animal refuges and animals specifically trained to assist handicapped persons are exempt from the permit requirements of this section.

22.605 <u>Permit application</u> --- The applicant shall submit the information set forth in (1) through (7) of this section to the Chief of Police for each permit, permit amendment or permit renewal. The Chief of Police, at his discretion, may recommend to the City Council that the permit fee be waived. Any false statements made by an applicant on the permit application will render such application null and void, and subject applicant to such penalties as may be provided by law.

(1) Name, complete address and telephone number. If the applicant is a corporation, partnership or other legal entity, the agent designated to represent the organization shall also provide such information. The applicant, permittee or designee must notify the Chief of Police in writing of any change of address or name within seven (7) days of such change.

(2) Location where the restricted animal(s) will be housed. Facilities for holding permitted restricted animal(s) must be located on the premises on which the permittee resides, or shall have a full-time caretaker to supervise the care and security of the facilities.

(3) Current animal inventory, including the common and scientific name, sex, age and source of each animal, any permanent identification on the animal and identification of animals that have injured and/or killed a human being. The permittee must notify the Chief of Police within twenty-four (24) hours of the addition, removal or death of a restricted animal listed on the inventory.

(4) A copy of the current USDA permits approving the possession of each species listed on the animal inventory.

(5) A signed statement by a veterinarian accredited by the USDS that he/she is the veterinarian of record and which includes the veterinarian's printed name, address, phone number and license number. The veterinarian shall certify that he/she has observed each of the applicant's animal(s) at least once during the prior year and that they have been appropriately immunized, housed and cared for.

(6) A plan for a quick and safe recapture of the animals(s), or if recapture is impossible, for the destruction of any animal held under the permit.

(7) A plan for the emergency evacuation of the facility holding the restricted animal(s), to be updated within thirty (30) days of any structural changes to the facility.

22.606 <u>Permit fee</u> ---

(1) The permit application, amendment and renewal fee is $100.

(2) Permit fees shall be held by the city and placed in the General Fund for the care and housing of restricted animals that are impounded under the provisions of this article.

22.607 <u>Term of permit</u> --- Permits issued by the Chief of Police under the provisions of this article shall be valid for a term of one (1) year from the date of issue unless the permit has been revoked for violations of this article.

22.608 <u>Inspection of facilities</u> ---

(1) Before any permit is issued by the Chief of Police for the possession of a restricted animal, an inspection of all animal facilities and records related to such animal shall be conducted by the Animal Control Officer for the purpose of ensuring compliance with the regulations of this article.

(2) Any person, corporation, partnership or other legal entity possessing an animal restricted under this article shall during normal business hours and at all reasonable times allow the Animal Control Officer to inspect all animals, facilities and records relating to such animals for the purpose of ensuring compliance with the regulations of this chapter.

22.609 <u>Animal identification and record keeping</u> ---

(1) Each permitted restricted animal shall be individually identified by the use of an injectable microchip. Owners may request approval to implant the microchip when the animal is next placed under anesthesia or sedation.

(2) Permittee shall maintain a written log for each restricted animal in their possession which documents each animals' health care.

(3) Permittee shall provide and maintain all documentation required by this provision, including all health records for at least three years from the date issued.

22.610 <u>Communicable disease testing requirements for primates</u> --- All primates shall be TB-tested by a licensed veterinarian. All medical records and results of such testing shall be maintained by permittee and made available for inspection by Animal Control Personnel. Any test results indicating a positive reaction to a TB (tuberculosis) test must be reported immediately to the Illinois Department of Agriculture, the Adams County Health Department and the City of Quincy Animal Control Officer.

22.611 <u>Care requirements for all restricted animals</u> ---

(1) No person, corporation, partnership or other legal entity shall maintain any restricted animal(s) in captivity in any unsanitary or unsafe condition or in a manner which results in the maltreatment or neglect of such animal(s), nor shall any species of animal be confined in any cage or enclosure which is inadequate for that species.

(2) Drinking water shall be provided at all times in clean containers, or as required to maintain the health of the animal. Pools shall be cleaned as needed to ensure good water quality. Enclosures shall provide adequate drainage of surface water.

(3) Animals shall be fed at least once per day or as directed by a veterinarian. Food provided shall be unspoiled and not contaminated. It shall be of a type and quantity sufficient to meet the nutritional requirements of the animal(s) to which it is provided.

(4) Fecal and food waste shall be removed from cages daily and stored or disposed of in a manner which prevents noxious odors or insect infestation. Hard floors shall be scrubbed and disinfected weekly.

22.612 <u>Escape and liability for escape</u> ---

(1) Permittee shall immediately notify the Animal Control Officer of any escape of a restricted animal.

(2) Permittee shall be liable for any costs resulting from the escape of a restricted animal.

(3) The City of Quincy, its agents, officers and employees shall not be liable to the owner of any restricted animal that expires, or is injured or destroyed during recapture; and the owner shall indemnify and hold harmless the City of Quincy from any liability for damage or injury caused by a restricted animal held under a permit issued pursuant to this article.

22.613 <u>Seizure</u> ---

(1) The Animal Control Officer or any law enforcement agency may take possession of a restricted animal and all equipment and vehicles necessary for the impoundment of the animal, upon a violation of this article which endangers the health, safety or welfare of the public or the animal.

(2) An owner of a restricted animal shall be liable for any and all costs incurred by the seizure and impoundment of a restricted animal.

(3) The owner of the restricted animal, if the owner can be found upon a reasonably diligent search, shall be given written notice of the reasons for the seizure, the location where the animal will be housed, and the owner's liability for the costs of the shelter and care of the animal. If the owner cannot be found after a reasonable search, a notice shall be posted on the property from which the animal was seized. If the identity and address of the owner is later determined, the notice shall immediately be delivered to the owner by certified letter.

(4) Upon proof of notification, the Chief of Police may seek a Court Order that the restricted animal be placed in a suitable facility or humanely destroyed if no agreement regarding disposition of the animal can be reached with the owner in a reasonable period of time.

22.614 <u>Disposition</u> ---

(1) The Chief of Police may allow owners of unpermitted restricted animals who do not qualify for a permit to possess the animal or whose permit is revoked for violating the provisions of this article to transfer the animal to a permitted or approved recipient.

(2) The owner of unpermitted restricted animals shall notify the Chief of Police prior to said transfer taking place.

(3) Each day of possession of the unpermitted restricted animal shall constitute a separate violation of this article.

22.615 <u>Penalties</u> --- In addition to the penalties and remedies specified in this article, and such other remedies as may be provided at law or in equity, any person, corporation, partnership or other entity found in violation of any provision of this article shall be subject to the general fines and penalties set forth in Chapter 32 of this Code.

ARTICLE VII PERMITS FOR TRAVELING EXOTIC ANIMAL EXHIBITS, CIRCUSES AND PETTING ZOOS

Section 22.701 <u>Permit required</u> --- No person, corporation or other business entity shall operate a traveling exhibit of unusual or exotic animals, circus or petting zoos without a permit issued by the Chief of Police.

22.702 <u>Permit application</u> --- Each permit application shall be submitted to the Chief of Police. The applicant must also comply with all regulations set forth by the USDA and/or IDA. Any false statements made by an applicant in a permit application will render such application null and void, and subject applicant to such penalties as may provided by law. Each applicant shall provide:

(1) Its name, complete address and phone number. If the applicant is a corporation, partnership or other legal entity, the applicant shall designate an active officer, partner, member or other person acting on its behalf as agent to represent the organization and such agent must also provide the same information. The applicant, permittee or designee must notify the Chief of Police in writing of any change of address or name fourteen (14) days prior to the change.

(2) Current animal inventory, including the common and scientific name, sex, age and source of each animal, any permanent identification on the animal and identification of animals that have injured and/or killed a human being. The permittee must notify the Chief of Police within twenty-four (24) hours of the addition, removal or death of a restricted animal listed on the inventory.

(3) Each animal identified in this subsection (2) as dangerous shall be prohibited from any contact with members of the public.

(4) A copy of the current USDA permits approving the possession of species listed on the animal inventory.

(5) A plan for the quick and safe recapture of the animal(s) or, if recapture is impossible, for the destruction of any animal held under the permit.

(6) An itinerary of performances schedules thirty (30) days prior to and thirty (30) days after the performance in the City of Quincy.

(7) The permittee shall provide a certificate of liability insurance naming the City of Quincy and the host agency as additional insureds in a minimum amount of $1,000,000.

22.703 <u>Escape</u> --- Permittee shall immediately notify the Chief of Police or his designee of any escape of a restricted animal, as defined in Section 22.601 of this Code, and shall be responsible for all costs associated with the escape and recapture of an escaped animal. The City and its agents, officers and employees shall not be liable to the owners for any restricted animal that expires, or is injured or destroyed during recapture, or to any other person for any damage or injury caused by a restricted animal held under a permit issued pursuant to this article.

22.704 <u>Certificate and reports</u> --- Current health certificated for all animals and latest reports of USDA inspections, including lists of infractions and violations shall be available for review by the Chief of Police.

22.705 <u>Time of application and permit</u> --- All permit applications must be submitted in completed form at least six (6) weeks prior to the scheduled event to the Chief of Police and shall include a permit fee of $500.

ARTICLE VIII ANIMAL CONTROL COMMISSION

Section 22.801 Creation --- There is hereby created and established an Animal Control Commission. The Animal Control Commission (hereinafter "the Commission") is an advisory body that oversees animal control issues for the City of Quincy. The Commissioners will provide the City Council with a comprehensive plan of specific recommendations directed towards improving the quality of animal control and related issues for the City of Quincy by identifying existing needs problems and resources. Animal control issues include but are not limited to amendments to municipal animal control ordinances and revisions to city animal control polices and procedures.

22.802 Membership ---

(1) **Generally**: The Commission shall consist of seven (7) members, which shall be appointed by the Mayor with the advice and consent of the City Council. The membership shall include two (2) City Council members, one (1) licensed veterinarian, one (1) representative from the Quincy Police Department, one (1) representative of an animal welfare organization, and two (2) representatives being appointed from the community at large. Members may be reappointed to serve on the committee from time to time.

(2) **Terms**: Members of the Commission, except for elected officials and the Quincy Police Department representative, shall be appointed for terms of two (2) years, which may be staggered by the Mayor with the advice and consent of the City Council. All terms shall be based on years that coincide with the fiscal year of the City of Quincy.

22.803 Organization ---

(1) **Chairman and secretary**: The Commission shall select from among its members a chairman and secretary. In the temporary absence of the chairman, the members of the commission may designate an acting chairman to serve in the chairman's absence. The chairman may resign as chairman and continue as a member of the Commission. Likewise, in the absence of a secretary, the acting chairman may designate a temporary secretary who may or may not be an acting member.

(2) **Rules**: The Commission may adopt such rules or by-laws for the conduct of its business as it may deem necessary or desirable consistent with this Article and other applicable ordinances of the City of Quincy.

(3) **Meetings**: The Commission shall meet regularly at such time and place as it may determine and special meetings as may be necessary or desirable may be called from time to time by the chairman or by any two members thereof.

(4) **Quorum**: A quorum of the Commission shall be four (4) of its members. All action of the Commission shall be determined by a majority vote of those present and voting.

22.804 Powers and duties ---

(1) The Commission shall have the authority to advise and make recommendations to the City Council concerning all facets of animal control, including policies, operating procedures and ordinances.

(2) Conducting public hearings when necessary to seek input on animal control issues.

(3) The Commission shall examine all facets of animal control and care within the city by identifying existing needs, problems, and resources to provide the City Council with a comprehensive plan of specific recommendations directed towards improving the quality of overall care and control of animals.

(4) The Commission will advise and make recommendation in the area of public information and education in regard to animal control services and to report findings and recommendations for such services to the City Council.

22.805 <u>Compensation</u> --- All members of the Animal Control Commission shall serve without compensation for such services, provided that this shall not be construed to limit an Alderman's right to receive compensation for his or her services as an Alderman, and provided further that members shall be entitled to reimbursement for any actual and reasonable out-of-pocket expenditures incurred in connection with the duly authorized business of the commission.

ARTICLE IX PENALTY

Section 22.901 **Penalty** --- Any person, firm or corporation who violates any of the provisions of this title shall, in addition to such other relief as the law may afford, be punishable asset forth in Chapter 32 of this Code.

CHAPTER 23

BUILDING, CONSTRUCTION & DEVELOPMENT REGULATIONS

ARTICLE I	**CONSTRUCTION REGULATIONS**
ARTICLE II	**MOVING BUILDINGS**
ARTICLE III	**DEMOLITION OF BUILDING OR STRUCTURES AND REQUIREMENT OF A FIRE PROTECTION GUARD**
ARTICLE IV	**BUILDING OPERATIONS**
ARTICLE V	**HOUSING STANDARDS**
ARTICLE VI	**DEVELOPMENT IN SPECIAL FLOOD HAZARD AREAS**
ARTICLE VII	**SMOKE DETECTORS**
ARTICLE VIII	**ONE AND TWO FAMILY DWELLINGS**

ARTICLE I CONSTRUCTION REGULATIONS

Section 23.101 **<u>Adoption of International Building Code (2000)</u>** --- The City of Quincy hereby adopts and incorporates herein by this reference as fully as if set out herein, as criteria for the construction, alteration, addition, repair, removal, demolition, use, location, occupancy and maintenance of buildings and structures within the corporate limits of the City of Quinsy and in all contiguous unincorporated territory to the extent and as provided by Chapter 29 (Zoning) of the Municipal Code of Quincy (1980) (hereafter referred to as "MCCQ"), the provisions of the International Building Code, 2000, as published by the International Code Council, Inc. (hereinafter referred to as to as "IBC"). All such construction, alteration, addition, repair, removal, demolition, use, location, occupancy and maintenance shall conform to the IBC. One (1) copy of the IBC hereby adopted has been filed and is to remain on file in the office of the City Clerk for public use, inspection and examination. Adoption of the IBC is subject to the following:

(1) (a) Subsection IBC-101.1 (Title) shall have inserted therein "City of Quincy" where provision is made for the name of the jurisdiction adopting said Code.

(b) Any reference to the name of the state or the state shall mean the State of Illinois.

(c) Any reference to the code official shall refer to the Building Inspector or any assistant thereto of and for the City of Quincy.

(d) That all sections thereof in conflict with the MCCQ or applicable state laws, as now or hereafter amended and existing, are hereby specifically deleted.

(2) IBC-101.4.1 (Electrical) is not hereby adopted, providing in lieu thereof that any reference to an electrical code in the IBC shall refer to the National Electric Code, 1999 Edition, NFPA 70-1999 as adopted and hereafter amended by the National Fire Protection Association and approved by the American National Standard Institute and the City of Quincy.

(3) IBC-101.4.4 (Plumbing) is not hereby adopted, providing in lieu thereof that any reference to a plumbing code in the IBC shall refer to the Minimum Code of Plumbing Standards as adopted and hereafter amended by the Illinois Department of Public Health (which code is hereby adopted by this reference) or other applicable provisions of ordinances of the City of Quincy or the MCCQ, rather than to the International Plumbing Code.

(4) IBC-103 (Department of Building Safety) is not hereby adopted, providing in lieu thereof that any reference to Department of Building Safety in the IBC shall be to Section 10.404 (Office of Inspection and Enforcement) in the MCCQ.

(5) IBC-105 (Permits) is not hereby adopted, providing in lieu thereof that any reference to permits in the IBC shall be to Section 29.1101 of the MCCQ.

(6) IBC-108.2 (Schedule of Fees) shall refer to Section 29.1101(2) of the MCCQ. The fee for each plan examination, building permit and inspection shall be paid in accordance with the schedule set forth therein.

(7) IBC-112 (Board of Appeals) is not hereby adopted, providing in lieu thereof the following:

<u>Appeal</u>: Any owner or person who is aggrieved or affected by an order, ruling, decision or interpretation of the Building Inspector or other enforcing officer in any of the matters relative to the interpretation or enforcement of any of the provisions of the IBC may appeal the order, ruling, decision or interpretation to the Building Commission established by and in accordance with Section 11.1801 (Building Commission) of the MCCQ.

(8) Any references in the IBC to a professional engineer shall mean a structural engineer so licensed under the laws of the State of Illinois.

(9) Any referred to "Building Official" in the IBC shall refer to the Building Inspector of the City of Quincy or any Assistant or Deputy Building Inspector.

(10) In addition to the provisions of IBC-109 (Inspections), the Director of the Department of Planning and Development or Director of Inspection and Enforcement, in their discretion, may authorize or direct the building official to accept, in lieu of inspections by the Building Inspector or other enforcing officers as required hereby, reports of inspection by individuals or agencies approved by either of them certifying compliance of the IBC or other applicable statutes, ordinances, rules or regulations.

(11) In addition to the provisions of IBC-113 (Violations) the imposition of penalties shall not preclude the institution of appropriate actions to prevent unlawful construction, to restrain, correct or abate a violation, to prevent illegal occupancy of a building, structure or premises, or to stop an illegal act, conduct, business or use of a building or structure on or about any premises.

(12) IBC-1009.2 (Minimum Size) provisions regarding minimum net clear openings are not hereby adopted and in lieu thereof emergency escape and rescue openings shall have a minimum net clear opening of 5.0 square feet.

(13) IBC-1009.2.1 (Minimum Dimensions) provisions regarding minimum dimensions are not hereby adopted and in lieu thereof the minimum net clear opening height dimension shall be 22 inches. The minimum net clear width dimension shall be 20 inches. The net clear opening dimensions shall be the result of normal operation of the opening.

(14) IBC-1612 (Establishment of Flood Hazard Areas) is not hereby adopted, providing in lieu thereof that any reference to Flood Hazard Areas shall refer to Section 23.601 (Development in Special Flood Hazard Areas) of the MCCQ.

(15) IBC Chapter 27 (Electrical) and 29 (Plumbing Systems) are hereby not adopted.

(16) IBC-3303 (Demolitions) is not hereby adopted, providing in lieu thereof that reference to demolitions in the IBC shall refer to Section 23.301 (Demolition of Building or Structures and Requirement of a Fire Protection Guard) of the MCCQ.

(17) IBC-3306.5 (Barriers) and 3306.6 (Barrier Design) are not hereby adopted, providing in lieu thereof that all areas of construction or excavation in commercial, retail and industrial districts which are located within a 500 foot radius of a school or residential district shall be enclosed by a cyclone-type fence of wood, metal or plastic construction with vertical supports every 6 to 8 feet and horizontal supports adequate to maintain the fence in a rigid, upright manner. Such fencing shall be maintained upon the site until the building under construction is enclosed and capable of being locked. All fencing shall be a minimum of 4 feet in height and shall be erected as far back from the building or excavation site as practicable.

(18) IBC-3307 (Protection of Adjoining Property) is not hereby adopted.

(19) IBC-3409 (Applicability) shall include the applicability date of 2/18/46.

23.102 <u>Restriction of employees</u> - - - An official or employee connected with the Inspection Department, except one whose only connection is that of a member of the Building Commission or Engineering and Inspection Commission, shall not for compensation, remuneration or profit of any kind or description whether in money, in kind or otherwise, be engaged in or directly or indirectly connected with the furnishing of labor, materials or alliances for the construction,

alteration or maintenance of a building, or the preparation of plans or of specifications thereof, unless that person is the owner of the building; nor shall such officer or employee engage in any work which conflicts with the official duties or with the interests of the department. Such official or employee who intends to engage in any of the above described activities, without compensation, remuneration or profit, shall first make full disclosure to the Director of Planning and Development of the identity of the person or parties for whom such activities would be performed, and the place, manner and time in which they would be performed. Said employee shall not engage in such activities unless approved by the Director of Planning and Development and only if said work will not conflict with nor create any reasonable appearance of a conflict with his official duties or the interest of the department.

23.103 Appeal - - - Any owner or person who is aggrieved or affected by an order, ruling, decision or interpretation of the Building Inspector or other enforcing officer in any of the matters relative to the interpretation or enforcement of any of the provisions of the IBC may appeal the order, ruling, decision or interpretation to the Building Commission established by and in accordance with Section 11.1801 (Building Commission) of the MCCQ.

23.104 Additional requirements for flood hazard areas - - - In addition to any applicable provisions, all construction shall conform with the regulations regarding development in special flood hazard areas established by Section 23.601 (Development in Special Flood Hazard Areas) of the MCCQ.

23.105 Other ordinances - - - Except as may be specifically provided herein, no other ordinances imposing requirements on buildings, structures, sheds, tents, lots or premises shall be nullified by those provisions of the IBC adopted herein, or any publications referred to therein. In all cases, the most rigid requirement shall control.

23.106 Violations and Penalties - - -

(1) **Unlawful acts:** It shall be unlawful for any person, firm or corporation to erect, construct, alter, extend, repair, remove, demolish, use or occupy any building or structure or equipment regulated by the IBC, or cause the same to be done, in conflict with or in violation of any of the provisions of the IBC as hereby adopted.

(2) **Notice:** The Building Inspector or other enforcing officer shall serve a notice or order on one (1) or more of the persons, firms or corporations responsible for the erection, construction, alteration, extension, repair, removal, demolition, use or occupancy of a building or structure or equipment in violation of the provisions of the IBC, in violation of a detailed statement or a plan approved thereunder, or in violation of a permit or certificate issued under the provisions of the IBC. Such order shall direct the discontinuance of the illegal action or condition of the abatement of the violation. For this purpose, the owner, lessee or licensee of the building or structure or equipment shall be considered responsible as well as any person, firm or corporation engaged in such activities.

(3) **Prosecution:** If a notice of the Building Inspector or other enforcing officer is not complied with forthwith or according to its terms, the Building Inspector or other enforcing officer may initiate proceedings through the Quincy Police Department for violation thereof or request that the City of Quincy Legal Department institute appropriate proceedings at law or in

equity to restrain, correct or abate such violation or require the removal or termination of the unlawful use of the building or structure or equipment in violation of the provisions of the IBC or of the order or direction made pursuant thereto.

(4) **Penalties:** Any person, firm or corporation who or which violates any of the provisions of this title shall, in addition to such other relief as the law may afford, be punishable as set forth in Chapter 32 of the MCCQ.

(5) **Abatement of violation:** The imposition of penalties shall not preclude the institution of appropriate actions to prevent unlawful construction, to restrain, correct or abate a violation to prevent illegal occupancy of a building, structure or premises, or to stop an illegal act, conduct, business or use of a building or structure on or about any premises.

ARTICLE II MOVING BUILDINGS

Section 23.201 **Permit required** ---- No person, firm or corporation shall move any building on, through, or over any street, alley, sidewalk or other public place in the city without having first obtained a permit. Application for such permits shall be made in writing to the City Clerk and shall state thereon the dimensions of the building including the exact loaded height of the building to be moved, the proposed route, the date and the number of hours that the building is estimated to occupy any portion of any street, alley, sidewalk or other public place. The City Clerk is hereby directed to notify the City Council that a permit to move a building has been requested.

23.202 **Approval - fee** ---- The applicant shall contact the Superintendent of Street & Bridge with the purpose of establishing a route that the building will be moved and setting a time for a meeting with the various city departments and utilities. No final action shall be taken as to any application until the same has been reviewed by and a recommendation made to the Council by the following: the Chief of Police, Superintendent of Street and Bridge, City Forester, City Engineer, public utilities and aldermen of effected wards. It is the responsibility of the applicant to submit said application for review and to obtain the recommendation of said persons or entities on a form or check list to be supplied by the Clerk. The City Clerk shall take the completed form or check list to the City Council for approval of the permit. Upon approval of the City Council, a fee of one hundred dollars ($100.00) for each calendar day or fraction thereof that is intended that the building shall occupy any such portion of any such public place shall be paid to the City Clerk and the permit issued. An additional payment of two hundred ($200.00) for each day or fraction thereof over and above the time stated on the permit, during which any building shall occupy any such public place, shall be paid. The fee for buildings that are not more than 14 feet wide and do not require a police escort will be twenty-five dollars ($25.00). A police escort will be required if it is necessary for this load to use part of the left lane when traveling a city street.

23.203 **Bond** ---- Every person, firm or corporation applying for a permit under this Article shall submit with his application a public liability bond in the sum of five thousand dollars ($5000.00) conditioned on his compliance with all the provisions of this Article and agreeing to pay the expense of the city as provided herein, and holding the city harmless from any claim which may be made against it by reason of the occupation of any street, sidewalk, alley or other public place by the building or structure moved.

23.204 **Expenses** ---- Every person, firm or corporation granted a permit shall in addition to the permit fee, reimburse the city for any expense incurred in the moving of the building. Reimbursable expenses shall include but are not limited to labor, and equipment provided for traffic control and tree trimming. The Chief of Police may require that the building be moved during hours of the day or on weekends when the volume of traffic is reduced. The determination of costs of the labor and equipment provided shall be made by the Superintendent of Street and Bridge and the Chief of Police. Such determination shall equal the actual costs, but in no event shall the cost be less than $25.00 per man-hour or part thereof.

23.205 Insurance --- The applicant shall agree to indemnify and to hold the City of Quincy harmless for all damages resulting from work conducted pursuant to the permit and shall deposit with the City Clerk a liability insurance policy in the amount of $100,000.00 per person/$300,000.00 per accident for bodily injury liability and $50,000.00 aggregate for property damage liability, which policy shall name the City of Quincy as an additional insured.

23.206 Lights and warnings --- The applicant shall at all times conduct the work in such a manner as to minimize hazards to vehicles and pedestrian traffic. All signs, barricades, or flagmen, required for traffic safety control shall be place and maintained in accordance with guidelines in the "Manual on Uniform Traffic Control Devices" as published by the Illinois Department of Transportation, which regulations are incorporated herein by this reference.

23.207 Utilities --- Whenever it shall be necessary to interfere with any public utility facility in moving a building the applicant shall be responsible for any expense for raising, lowering, piecing out or any other rearrangement of those public utility facilities.

23.208 Fire alarm wires --- When any such moving building shall approach any fire alarm wire or pole which shall be endangered by the removal of such building, it shall be the duty of the mover to notify the Chief of the Fire Department at least six hours before reaching such wire or pole so that they may be removed or cared for by the authorities of the municipality.

23.209 Penalty ---- Any person, firm or corporation who violates any of the provisions of this title shall, in addition to such other relief as the law may afford, be punishable as set forth in Chapter 32 of this Code.

ARTICLE III DEMOLITION OF BUILDINGS OR STRUCTURE AND REQUIREMENT OF A FIRE PROTECTION GUARD

Section 23.301 <u>Requirement of a demolition permit</u> ---

(1) **Requirement of a demolition permit**: Notwithstanding any other provision of local, state or federal law, any building to be demolished or otherwise removed in whole or in part shall require a demolition permit and the proper fee as authorized and granted by both the Quincy Fire Department and the City of Quincy Inspection Office.

(2) **General procedure**:

(a) A demolition permit shall be a obtained from the Inspection Office prior to beginning salvage operations. The contractor, individual or other business seeking a demolition permit shall complete the required application for demolition permit, in the form and manner as prescribed by the Inspection Office. The Quincy Fire Department and the Inspection Office shall have the authority to make such inquiry and to obtain such additional information as is necessary to review and process the application for demolition permit, including making inquiry with the Quincy Police Department or other sources.

(b) For purposes of this article, the word "salvage" shall include the removal of exterior fixtures, trim, doors, windows, porches, structural components and significant architectural or historical features.

(c) After receipt and filing of a completed application for demolition permit, the building official shall promptly cause a copy of such application to be forwarded to the Quincy Fire Department for review.

(d) The Quincy Fire Department and the Inspection Office shall perform independent follow-up inspections of the building at the proposed demolition site to verify the information provided in the application and to determine whether or not a waiver of the requirement of an on-site fire protection guard is warranted.

(e) Subject to emergencies or other situations beyond the control of the Quincy Fire Department and the Inspection Office, a decision as to whether or not a waiver of the requirement of a fire protection guard is warranted shall be made within a reasonably prompt time, generally two (2) business day, after receipt and filing of the application for demolition permit.

(3) **Failure to provide information and denial of demolition permit**: Should a contractor, individual or other business seeking a demolition permit fail to provide complete and accurate information as is required by the Quincy Fire Department and the Inspection Office, sufficient and reasonable grounds exist for immediate denial of a demolition permit, or revocation of any demolition permit previously issued.

(4) **Issuance of demolition permit**:

(a) A demolition permit shall not be granted prior to submission to the Inspection Office of a completed utility notification check off, forms for which shall be available at the Inspection Office.

(b) For any individual or contributing property in a Historic District listed on the National Register of Historic Places, no demolition permit shall be granted prior to the expiration of fifteen (15) days from the filing of the application with the Inspection Office to allow the Quincy Preservation Commission sufficient time to survey, review, comment and document the

subject property and to submit a report to the City if Quincy, unless such review property is waived in writing by the Commission.

1.) **Exception - City notice to owner to demolish**: In the event a property has been declared unsafe and dangerous by the city and a nuisance abatement notice is given to the owner to demolish or repair the nuisance structure, then the period provided above for review by the Quincy Preservation Commission shall commence from the time the Preservation Commission is provided with a copy of such nuisance abatement notice (or other notice from the city that the nuisance structure is to be demolished). If such notice has been provided to the Preservation Commission, it shall not be necessary to provide further notice to the Commission of any application to demolish (by the owner) or of direct demolition by the city.

2.) **Summary demolition**: Notwithstanding anything herein to the contrary, the period for review by the Preservation Commission may be waived upon the concurrence of the Superintendent of Inspection and the Fire Chief that a structure constitutes such an imminent threat of serious injury or damage to persons or property that it should be demolished in a manner consistent with the summary nuisance abatement provisions of Section 21.104 of the Municipal Code provided that the Preservation Commission receive notice from the Superintendent of Inspection of such summary demolition as soon as is practicable, and nothing herein shall be deemed to limit or restrict the power or authority of the city to summarily abate nuisances in accordance therewith.

(c) For any individual or contributing property nominated or designated as a Quincy Local Landmark or contributing property in a designated Quincy Local Historic District, no demolition permit shall be granted prior to receipt of a certificate of demolition as per the requirements of ordinance no. 8151 (Landmark and Historic, Districts) and Section 29.1012 (Demolition).

(d) The Quincy Fire Department shall receive prompt notice from the Inspection Office of the issuance of a demolition permit, at which time the Quincy Fire Department and the Inspection Office may place such further reasonable conditions, requirements or restrictions upon the issuance of the permit as are necessary to insure the public health, safety and welfare, in addition to the general requirement of this Chapter.

23.302 **<u>General requirement of a fire protection guard</u>** --- All buildings or other structures to be demolished or otherwise removed in part or in whole in the City of Quincy shall require the placement of an on-site fire protection guard unless an exception is granted as provided in the Article.

(1) **Definition**: A qualified fire protection guard shall be defined exclusively as an individual hired from a bonded security agency or a person approved by the Quincy Police Department and Fire Department. Such approved individual shall, at a minimum, have not been convicted of a felony offense within the ten (10) years immediately preceding the date of the demolition application and must be able to demonstrate the ability to use a standard 2-way communication system.

(2) **Required notification**: Prior to the start of demolition, the contractor, individual or business performing the demolition shall provide notice to the Quincy Fire Department and the Inspection Office of the name, address and telephone number, both residence and business of the fire protection guard, together with written work shift schedule.

(3) **Required equipment**: Any such fire protection guard shall be equipped with a fully functional portables radio having both 9-1-1 and the Quincy Fire Department frequency, cellular

telephone, or similarly reliable 2-way communication system. Other equipment may be required by the Quincy Fire Department based on the circumstances and nature of the demolition undertaken.

(4) **Costs, fees and expenses**: All costs, fees or expenses, including but not limited to salaries or rental of any equipment shall be the responsibility of and be borne by the contractor, individual or business securing the demolition permit.

(5) **Exception to the requirement**: The Quincy Fire Department and the Inspection Office may, after a review of an application for demolition permit and an on-site inspection, waive the requirement of a fire protection guard. Any such waiver shall be in writing and signed by the Fire Chief and the building official.

(6) **Criteria to be used in granting a waiver**: The Quincy Fire Department and the Inspection Office may consider, but shall not be limited to, the following factors in their determination if a waiver of the requirement of a fire protection guard is warranted:

(a) Geographical location of the building or structure.

(b) Construction materials of the building or structure.

(c) Size and square footage of the building or structure.

(d) Previous use or occupancy characteristics of the building or structure.

(e) Public safety, life hazards and exposure problems in the vicinity of the building or structure to be demolished or otherwise removed.

(f) The location, size and number of fire hydrants in the vicinity of the proposed demolition site.

(g) Time frame needed for demolition and the method of demolition.

(h) Past record, history or experience of the contractor, individual or other business demolishing the building or structure.

(i) Manpower and equipment to be used in the demolition project.

(j) Presence of nearby buildings or other structures that are individual or contributing properties in a Historic District listed on the National Register of Historic Places, properties designated as Quincy local landmarks or contributing properties in a designated Quincy Local Historic District.

(7) **Revocation of waiver**: Regardless of the granting of a waiver for the requirement of the placement of a fire protection guard, if, in the opinion of the Quincy Fire Department and the Inspection Office, the circumstances have materially changed or other appropriate circumstances exist, any such waiver may be revoked upon notice. In such event, the provisions relating to the placement of an on-site fire protection guard shall be implemented forthwith.

23.303 <u>General requirements regarding on-site fire protection guard and demolition procedures</u> ---

(1) **Consent to inspect**: The receipt and filing of an application for demolition permit or the issuance of any demolition permit shall be deemed to provide the necessary consent and authority for any member of the Quincy Fire Department and Inspection Office and other departments or other City of Quincy personnel, including members of the Quincy Preservation Commission, to inspect any building or structure subject to the demolition permit prior to or during the demolition process. In addition to other duties required of them, the Quincy Fire Department and the Inspection Office may inspect the building or structure during the demolition process to determine compliance with this ordinance.

(2) **Duty to secure building and site**: The contractor, individual or business granted the demolition permit shall have the duty and responsibility of securing the building and structure at night or at such other times when demolition is not in active progress or when demolition workers are not present on the site or w hen such workers cannot remain vigilant in safeguarding the building or structure from fire or other hazards. Securing the building or structure and site shall include, but shall not be limited to, covering up holes at the completion of each work day and securing doors, windows and other access points or otherwise preventing access to the building interior and, in addition to the fencing requirements under Section 3303 of Chapter 33 of the International Building Code (2000) demolition site shall be secured by construction of a cyclone-type fence of wood, metal or plastic construction around the perimeter of the demolition site as far back from the demolition site as is practicable, with vertical supports every 6 to 8 feet and horizontal supports adequate to maintain the fence in a rigid, upright fashion. All such fencing shall be a minimum height of 4 feet in height. The duty to secure the structure and site shall exist whether or not a waiver of the requirement of placement of a fire protection guard is granted.

(3) **Duty to protect others from injury during the demolition process**: During the active demolition process, appropriate measures shall be taken to prevent danger or injury to human life or to the public welfare. Adequate lighting, guard railings, temporary sidewalks and proper scaffolding and fencing shall be utilized so as to protect others from injury. Rubble causing dust so as to cause a nuisance shall be adequately sprinkled and the general work area shall be maintained and cleaned. Other actions may be required as are appropriate so as to protect the health, safety and welfare of others during the active demolition process. A minimum of two workmen shall be on the demolition site when heavy equipment is in use or, is otherwise operating. Heavy equipment at a demolition site shall contain proper back-up lights and signals and other appropriate safety features to protect others from injury.

(4) **Posting demolition site**: At least four (4) signs or more based on the size of the structure to be demolished shall be posted on the demolition site at all times. Such signs shall be at least 12" x 12" and state that the area is a demolition site that it is off limits to the general public, that an unsafe condition exists and that no trespassing is permitted.

(5) **Use of cutting torches and similar equipment**: When cutting torches or similar equipment are used in the demolition process, the contractor, individual or other business provided the demolition permit and any workers involved in the demolition process shall appropriately and adequately monitor the area where such torches and other similar equipment issued for at least one (1) hour after such usage so as to insure that no fire exists or will develop in any wall or floor or other associated area. The use of cutting torches or similar equipment shall give rise to a duty to inspect and make safe the area where such equipment is being used.

(6) **Placement of on-site fire protection guard**: At least one (1) fire protection guard shall be on duty at the end of the demolition work day until work commences the next day. A fire protection guard shall be on site during the weekend, holidays and at any other time where no active demolition work is in progress. Where appropriate, the Quincy Fire Department may order the placement of a fire protection guard regardless of the time or presence of workers on-site should it be necessary under the circumstances to prevent fire or where an immediate threat of arson exists

(7) **Starting and completion of the demolition process**: The start of the demolition process shall begin when salvage operations are initiated, or when all of the utilities are

disconnected from the building or structure or are otherwise not in service, or a demolition permit has been issued, whichever occurs first. Notwithstanding this provision, the Quincy Fire Department or the Inspection Office may in its discretion notify the demolition contractor, individual or other business that the demolition process has begun regardless of the removal of utility service. Utility service used to assist in demolition shall in no way delay the existence of the start of demolition. The completion of the demolition process shall exist when both the Quincy Fire Department and the Inspection Office sign off, in writing, that the process is completed.

(8) **Stop order and revocation of demolition permit**: The Inspection Office or the Quincy Fire Department may order the demolition of a building or structure to be delayed or stopped if any unsafe or health hazard condition exists or develops during the demolition process or where any ordinance of the City of Quincy is deemed to have been violated. A demolition permit may be revoked for failure to comply with any ordinances or any such other applicable State or Federal statutes or regulations. In addition to any other remedies provided, where a stop order is issued or where a demolition permit is revoked, a new demolition permit will be required containing appropriate terms and conditions and an additional fee of One Hundred Dollars ($100.00) will be required for such additional demolition permit.

(9) **Extermination**: Demolitions may be preceded by an inspection of the premises by the Minimum Housing Inspector to determine whether extermination procedures are necessary. If the premises are found to be infested by mice, rats or other vermin, appropriate extermination measures to prevent the spread of infestation to adjoining or other areas shall be carried out before, during and after demolition. Regardless of this inspection, it shall be required that appropriate removal procedures be implemented prior to the start of demolition to rid the building or structure of any infestation or vermin, including rats or mice, or other animals or insects of whatever type or kind.

(10) **Completion of demolition projects**: All demolition projects shall be completed within 30 days from the issuance of a demolition permit. At the time of issuance of a demolition permit, the Inspection Office may extend this time as is appropriate without an additional fee for such major demolition projects which by their nature can not be completed within 30 days. For all other projects, the Inspection Office may grant an extension for completion of a demolition project based on good cause and the paying of a permit extension fee in the amount of One Hundred Dollars ($100.00).

(11) **Duty to complete demolition site:** The demolition job site is to be left at grade level, free and clear of any debris or building materials. The foundation shall be removed to six (6) inches below grade level. Materials which are not salvageable shall be disposed of in an approved, licensed landfill. If the property is to be used for a parking lot, it shall be paved with a hard surface such as oil and chip, asphalt or concrete within one (1) year of demolition completion. If the property is not to be used for a parking lot, it shall be graded and sowed with grass seed.

(12) **Incorporation of IBC**: Any such supplemental provisions of the International Building Code, or any applicable ordinances as amended and adopted for the City of Quincy are hereby incorporated in this Article and shall be observed during the demolition process.

23.304 **<u>Bond and insurance requirements</u>** --- Prior to the issuance of a demolition permit, any contractor, individual or business seeking a demolition permit, except the owner of a private

residence seeking a permit to demolish his or her own residence or accessory structure, shall post and file with the Inspection Office evidence of security for the performance of the obligations and duties contained in this ordinance. Such security shall consist of a bond, certified cashier's check or an institutional letter of credit in the amount of not less than five thousand dollars ($5,000.00) for residential demolition project and ten thousand dollars ($10,000.00) for each commercial demolition project. In addition to the above requirements and prior to the issuance of a demolition permit, any contractor, individual or business seeking a demolition permit shall maintain comprehensive general liability insurance and shall present and file proof of same with the Inspection Office by way of certificate of insurance.

23.305 Waiver --- The Building Official and Fire Chief or their designees may, after review of an application and on site inspection, waive part or all of the provision of this Article, except as they pertain to structures in a Historic District listed on the National Register of Historic Places, or designated a Quincy Local Landmarks or contributing properties in a designated Quincy Local Historic District, and residential dwellings and accessory structures not in a Historic District listed on the National Register but which have been identified in an historical architecture survey as contributing or significant historic structures.

23.306 Appeal process --- Any contractor, individual or other business who is aggrieved or affected by an order, ruling, decision or interpretation of the Quincy Fire Department or Inspection Department or other enforcing officer in any of the matters relative to the interpretation or enforcement of any provisions of this ordinance may appeal the order, ruling, decision or interpretation to the Building Commission established by and in accordance with Article XVII (Building Commission) of Chapter 11 (Boards and Commissions).

23.307 Penalty --- Any person, firm or corporation which violates any provision of this Article shall, in addition to such other relief as the law may afford, be subject to a minimum fine of one hundred dollars ($100.00) for the first offense, three hundred dollars ($300.00) for the second offense and five hundred dollars ($500.00) for each subsequent offense. The maximum penalty for a single violation shall not exceed one thousand dollars ($1,000.00). The City of Quincy may institute an appropriate civil action to recover any and all expenses or costs, including attorney's fees, incurred by the city in enforcing this ordinance. All amounts recovered under this Section shall constitute a lien on real property at the subject demolition site.

23.308 Obstruction of public right-of-way --- It shall be unlawful for any person, firm or corporation to cause, create or maintain any obstruction of any street, alley or sidewalk or other public way except as may be specifically authorized by this Article, other provision of the Municipal Code or by the City Council.

ARTICLE IV BUILDING OPERATIONS

Section 23.401 **Use of streets** --- The use of streets for the storage of materials in the process of construction or alteration of a building may be granted where the same will not unduly interfere with traffic and will not reduce the usable width of the roadway to less than eighteen (18) feet; provided that no portion of the street other than directly abutting on the premises on which work is being done shall be used except with the consent of the owner or occupant of the premises abutting on such portion. Any person seeking to make such use of the street shall file with the City Clerk a bond for five thousand dollars ($5,000) to indemnify the city for any loss or damage which may be incurred by reason of such use and occupation.

23.402 **Night operations** --- No construction or alteration operations shall be carried on at night time if the same are accompanied by loud noises, except with the consent of the Council.

23.403 **Sidewalks** --- No sidewalk shall be obstructed in the course of building construction or alteration without a special permit from the Clerk being first obtained.

23.404 **Safeguards** --- It shall be the duty of the person or corporation doing any construction, altering or wrecking work in the city to do the same with proper care for the safety of persons and property. Warnings, barricades and lights shall be maintained wherever necessary for the protection of pedestrians or traffic, and temporary roofs over sidewalks shall be constructed wherever there is danger to pedestrians from falling articles or materials.

23.405 **Penalty** --- Any person, firm or corporation who violates any of the provisions of this title shall, in addition to such other relief as the law may afford, be punishable as set forth in Chapter 32 of this Code.

ARTICLE V HOUSING STANDARDS

Section 23.501 <u>Adoption of the International Property Maintenance Code (2000)</u> --- There is hereby adopted by and for the City of Quincy, for the purpose of establishing housing and property maintenance standards for the city, the provisions of the "International Property Maintenance Code, 2000" (hereinafter referred to as the "IPM") as fully set forth in this ordinance, and any subsequent cumulative supplement thereto, one (1) copy of which is on file in the office of the City Clerk, provided:

(1) (a) Subsection IPM-101.1 (Title) shall have inserted therein "City of Quincy" where provision is made for the name of the jurisdiction adopting said code.

(b) Any reference to the name of the state or the state shall mean the State of Illinois.

(c) Any reference to the code official shall refer to the Building Inspector or any assistant thereto of and for the City of Quincy.

(d) That all sections thereof in conflict with the Municipal Code of the City of Quincy (1980) (hereafter referred to as "MCCQ") or applicable state laws, as now or hereafter amended and existing, are hereby specifically deleted.

(2) IPM-103 (Department of Property Maintenance Inspection) is not hereby adopted, providing in lieu thereof that any reference to Department of Property Maintenance Inspection shall refer to Section 10.404 (Office of Inspection and Enforcement) of the MCCQ.

(3) IPM-103.6 (Fees) is not hereby adopted, providing in lieu thereof that any reference to fees shall refer to Section 29.1101(2) of the MCCQ. The fee for each plan examination, building permit and inspection shall be paid in accordance with t he schedule set forth therein.

(4) IPM-111 (Means of Appeal) is not hereby adopted, providing in lieu thereof that any owner or person who is aggrieved or affected by an order, ruling, decision or interpretation of the Building Inspector or other enforcing officer in any of the matters relative to the interpretation or enforcement of any of the provisions of the IPM may appeal the order, ruling, decision or interpretation to the Building Commission established by and in accordance with Section 11.1801 (Building Commission) of the MCCQ.

(5) IPM-303.14 (Insect Screens) shall include the applicability dates of March 1 through December 31.

(6) IPM-602.3 (Heat Supply) shall include the applicability dates of January 1 through December 31.

(7) IPM-602.4 (Occupiable Work Spaces) shall include the applicability dates of January 1 through December 31.

23.502 <u>Right of Appeal</u> - - - Any owner or person who is aggrieved of affected by an order, ruling decision or interpretation of the Building Inspector or other enforcing officer in any of the matters relative to the interpretation or enforcement of any of the provisions of the IPM may appeal the order, ruling, decision or interpretation to the Building Commission established by and in accordance with Section 11.1801 (Building Commission) of the MCCQ.

23.503 <u>Emergency</u> - - - Whenever the Building Inspector finds that an emergency exists which requires immediate action to protect the public health or safety, he may, without notice, issue an order reciting the existence of such emergency and requiring that it such action be taken as he deems necessary to meet the emergency. Notwithstanding the other provisions of this Article,

such order shall be effective immediately. Any person to whom such order is directed shall comply therewith immediately.

23.504 <u>Violations and Penalties</u> - - -

(1) **Unlawful acts:** It shall be unlawful for any person, firm or corporation to erect, construct, alter, extend, repair, remove, demolish, use or occupy any building or structure or equipment regulated by the IPM, or cause the same to be done in conflict with or in violation of any of the provisions of the IPM as hereby adopted.

(2) **Notice:** The Building Inspector or other enforcing officer shall serve a notice or order on one (1) or more of the persons, firms or corporation responsible for the erection, construction, alteration, extension, repair, removal, demolition, use or occupancy of a building or structure or equipment in violation of the provisions of the IPM, in violation of a detailed statement of a plan approved thereunder, or in violation of a permit or certificate issued under the provisions of the IPM. Such order shall direct the discontinuance of the illegal action or condition or the abatement of the violation. For this purpose, the owner, lessee or licensee of the building or structure or equipment shall be considered responsible as well as any persons, firm or corporation engaged in such activities.

(3) **Prosecution:** If a notice of the Building Inspector or other enforcing officer is not complied with forthwith or according to its terms, the Building Inspector or other enforcing officer may initiate proceedings through the Quincy Police Department for violation thereof or request that the City of Quincy Legal Department institute appropriate proceedings at law or in equity to restrain, correct or abate such violation, require the removal or termination of the unlawful use of the building or structure or equipment in violation of the provisions of the IPM or of the order or direction made pursuant thereto.

(4) **Penalties:** Any person, firm or corporation who or which violates any of the provisions of this title shall, in addition to such other relief as the law may afford, be punishable as set forth in Chapter 32 of the MCCQ.

(5) **Abatement of violation:** The imposition of penalties shall not preclude the institution of appropriate actions to prevent unlawful construction, to restrain, correct or abate violation, to prevent illegal occupancy of a building, structure or premises, or to stop an illegal act, conduct, business or use of a building or structure on or about any premises.

ARTICLE VI DEVELOPMENT IN SPECIAL FLOOD HAZARD AREAS

Section 23.601 **Purpose** --- This ordinance is enacted in order to accomplish the following purposes:

(1) To prevent unwise developments from increasing flood or drainage hazards to orders;

(2) To protect new buildings and major improvements to buildings from flood damage;

(3) To promote and protect the public health, safety, and general welfare of the citizens from the hazards of flooding;

(4) To lessen the burden on the taxpayer for flood control, repairs to public facilities and utilities, and flood rescue and relief operations;

(5) To maintain property values and a stable tax base by minimizing the potential for creating blight areas; and,

(6) To make federally subsidized flood insurance available.

23.602 **Definitions** --- For the purposes of this ordinance, the following definitions are adopted:

(1) "**Base flood**" The flood having a one-percent probability of being equaled or exceeded in any given year. The base flood is also known as the 100 year flood. The base flood elevation at any location is as defined in Section 3 of this ordinance,

(2) "**Base Flood Elevation**" (BFE) The elevation in relation to mean sea level of the crest of the base floor.

(3) "**Building**" A structure that is principally above ground and is enclosed by walls and a roof including manufactured homes and prefabricated buildings. The term also includes recreational vehicles and travel trailers to be installed on a site for more than 180 days.

(4) "**Development**" Any man-made change to real estate including:

(a) Construction, reconstruction, placement of a building, or any addition to a building, exceeding 70 square feet in floor are;

(b) Substantial improvement of an existing building;

(c) Installation of a manufactured home on a site, preparing a site for a manufactured home, or installing a travel trailer on a site for more than 180 days;

(d) Installation of utilities, construction of roads, bridges, culverts or similar projects;

(e) Construction or erection of levees, dams, walls, or fences;

(f) Drilling, mining, filling, dredging, grading, excavating, paving, or other alterations of the ground surface;

(g) Storage of materials including the placement of gas or liquid storage tanks;

(h) Channel modifications or any other activity that might change the direction, height, or velocity of flood or surface waters.

"**Development**" does not include maintenance of existing buildings and facilities; resurfacing roads; or gardening, plowing, and similar practices that do not involve filling, grading, or construction of levels.

(5) "**FEMA**" Federal Emergency Management Agency.

(6) "**Flood**" A general and temporary condition of partial or complete inundation of normally dry land areas from the overflow, the usual and rapid accumulation, or the runoff or surface waters from any source.

(7) "**Flood Fringe**" That portion of the floodplain outside of the regulatory floodway.

(8) "**Flood Insurance Rate Map**" A map prepared by the Federal Emergency Management Agency that depicts the floodplain or special flood hazard area (SFHA) within a community. This map includes insurance rate zones and may or may not depict floodways and show base flood elevations.

(9) "**Floodplain**" and "**Special Flood Hazard Area (SFHA)**" are synonymous. Those lands within the jurisdiction of the city that are subject to inundation by base flood. The floodplains of the city are generally identified as such on the Flood Insurance Rate Map of the city prepared by the Federal Emergency Management Agency and dated October 15, 1981. The floodplains of those parts of unincorporated Adams County that may be annexed into the city are generally identified as such on the Flood Insurance Rate Map prepared for Adams County by the Federal Emergency Management Agency and dated November 15, 1985.

(10) "**Floodproofing**" Any combination of structural or nonstructural additions, changes, or adjustments to structures which reduce or eliminate flood damage to real estate, property and their contents.

(11) "**Floodproofing Certificates**" A form published by the Federal Emergency Management Agency that is used to certify that a building has been designed and constructed to be structurally dry floodproofed to the flood protection elevation.

(12) "**Flood Protection Elevation**" or "**FPE**" The elevation of the base flood plus one foot of freeboard at any given location in the floodplain.

(13) "**Floodway**" That portion of the floodplain required to store and convey the base flood. The floodway for the floodplains of Mississippi River and Cedar, Curtis and Emery Creeks shall be as delineated on the Flood Boundary and Floodway Map prepared by FEMA and dated October 15. 1981. The floodways for each of the remaining floodplains of the city shall be according to the best data available from Federal, State, or other sources.

(14) "**IDOT/DWR**" Illinois Department of Transportation/Division of Water Resources .

(15) "**Manufactured Home**" A structure transportable in one or more sections, that is built on a permanent chassis and is designed to be used with or with out a permanent foundation when connected to required utilities.

(16) "**NFIP**" National Flood Insurance Program.

(17) "**SFHA**" See definition of floodplain.

(18) "**Substantial Improvement**" Any repair, reconstruction, or improvement of a structure, the cost of which equals or exceeds 50 percent of the market value of the structure either:

(a) Before the improvement or repair is started; or,

(b) If the structure has been damaged, and is being restored, before the damage occurred.

"**Substantial Improvement**" is considered to occur when the first alteration of any wall, ceiling, floor, or other structural part of the building commences, whether or not that alteration affects the external dimensions of the structure. The term does not, however, include either;

(c) Any project for improvement of a structure to comply with existing state or local health, sanitary, or safety code specifications which are solely necessary to assure safe living conditions or;

(d) Any alterations of a structure listed on the National Register of Historic Places or the Illinois Register of Historic Places.

(19) "**Substantial Improvement - 1993 Standard**" Replacement cost in lieu of market value shall be used only for determining substantial improvement of those buildings in Special Flood Hazard Areas that were damaged directly as a result of the flood event which occurred between July 1, 1993 and December 31, 1993. The use of such replacement cost can not be used for determining whether or not a building is being substantially improved by reasons other than substantial damages which occurred as a result of this flood event.

(a) "**Replacement Cost**" as used herein means the cost of replacing a structure with a structure of like kind based upon preflood costs for labor and materials.

(b) "**Expiration of permit**" If the work described on any floodplain development permit shall not have begun within one hundred and eighty (180) days from the issuance thereof in accordance with this ordinance, said permit shall expire and be cancelled by the community's permit official and written notice thereof shall be given to the applicant.

(c) "**Sunset clause**" This provision for the temporary use of "replacement cost" shall expire on December 1, 1993, without further motion, resolution or ordinance.

23.603 <u>Base flood elevation</u> --- This ordinance's protection standard is the base flood. The best available base load data are listed below. Whenever a party disagrees with the best available data, the party may finance the detailed engineering study needed to replace the existing data with better data and submit to the Federal Emergency Management Agency for approval.

(1) The base flood elevation for the floodplains of the Mississippi River, Cedar, Curtis, Emery, Tributary No. 2 and Tributary River and Cedar, Curtis, Emery, Tributary No. 2 and Tributary No. 3 Creeks shall be as delineated on the 100-year flood profiles in the Flood Insurance study of the city prepared by the Federal Emergency Management Agency and dated April 15, 1981.

(2) The base flood elevation for each floodplain delineated as an "AH Zone" or "AO Zone" shall be that elevation (or depth) delineated on the Flood Insurance Rate Map of the city.

(3) The base flood elevation for each of the remaining floodplains delineated as an "A Zone" on the Flood Insurance Rate Map of the city shall be according to the best data available from federal, state, or other sources. Should no other data exist, an engineering study must be financed to determine base flood elevations.

(4) The base flood elevation for the floodplains of those parts of formerly unincorporated Adams County that are currently annexed into the city, shall be delineated on the 100-year flood profiles of the Flood Insurance Study of Adams County prepared by the Federal Emergency Management Agency and dated November 15, 1985.

23.604 <u>Duties of the City Engineer</u> --- The City Engineer shall be responsible for the general administration of this ordinance and ensure that all development activities within the floodplains under the jurisdiction of the city meet the requirements of this ordinance.
Specifically, the City Engineer shall:

(1) Process development permits in accordance with 23.605;

(2) Ensure that all development in a floodway (or a floodplain with no delineated floodway) meets the damage prevention requirements of 23.606;

(3) Ensure that the building protection requirements for all buildings subject to 23.607 are met and maintain a record of the "as-built" elevation of the lowest floor (including basement) or floodproof certificate;

(4) Assure that all subdivisions and annexations meet the requirements of 23.608.

(5) If a variance is requested, ensure that the requirements of 23.608 are met and maintain documentation of any variances granted;

(6) Inspect all development projects and take any and all actions outlined in 23.611 as necessary to ensure compliance with this ordinance;

(7) Assure that applicants are aware of and obtain any and all other required local, state, and federal permits;

(8) Provide information and assistance to citizens upon request about permit procedures and floodplain construction techniques;

(9) Cooperate with state and federal floodplain management agencies to coordinate base flood data and to improve the administration of this ordinance; and

(10) Maintain for public inspection base flood data, floodplain maps, copies of state and federal permits, and documentation of compliance for development activities subject to this ordinance.

23.605 <u>Development permit</u> --- No person, firm, corporation, or governmental body not exempted by state law shall commence any development in the floodplain without first obtaining a development permit from the city engineer. The City Engineer shall not issue a development permit if the proposed development does not meet the requirements of this ordinance.

(1) The application for development permit shall be accompanied by:

(a) Drawings of the site, drawn to scale showing property line dimensions;

(b) Existing grade elevations and all changes in grade resulting from excavation or filling;

(c) The location and dimensions of all buildings and additions to buildings; and

(d) The elevation of the lowest floor (including basement) of all proposed buildings subject to the requirements of 23.607 of this ordinance.

(2) Upon receipt of an application for a development permit, the City Engineer shall compare the elevation of the site to the base flood elevation. Any development located on land that can be shown by survey data to have been higher than the base flood elevation as of the date of the site's first Flood Insurance Rate Map identification is not in the floodplain and therefore not subject to the requirements of this ordinance. The City Engineer shall maintain documentation of existing ground elevation at the development, site and certification that this ground elevation existed prior to the date of the site's first Flood Insurance Rate Map identification.

23.606 <u>Preventing increased flood heights and resulting damages</u> -- Within all floodplains where a floodway has not been delineated, the following standards shall apply:

(1) Except as provided in Subsection 23.606(2) no development shall be allowed which, acting in combination with existing and anticipated development, will cause any increase in flood heights or velocities or threat to public health and society. The following specific development activities shall be considered as meeting this requirement:

(a) Barge fleeting facilities meeting the conditions of IDOT/DWR statewide permit no. 3;

(b) Aerial utility crossings meeting the conditions of IDOT/DWR statewide permit no. 4;

(c) Minor boat docks meeting the conditions of IDOT/DWR statewide permit no. 5;

(d) Minor, non-obstructive activities meeting the conditions of IDOT/DWR statewide permit no. 6;

(e) Outfall structures and drainage ditch outlets meeting the conditions of IDOT/DWR statewide permit no. 7;

(f) Underground pipeline and utility crossings meeting the conditions of IDOT/DWR statewide permit no. 8;

(g) Bank stabilization projects meeting the conditions of IDOT/DWR statewide permit no. 9;

(h) Accessory structures and additions to existing residential buildings meeting the conditions of IDOT/DWR statewide permit no. 10;

(i) Minor maintenance dredging activities meeting the conditions of IDOT/DWR statewide permit no. 11; and

(j) Any development determined by IDOT/DWR to be located entirely in flood fringe area.

(2) Other development activities not listed in Subsection 23.606(1) permitted only if:

(a) A permit has been issued for the work by IDOT/DWR (or written documentation is provided that an IDOT/DWR permit is not required); and

(b) Sufficient data has not been provided to FEMA when necessary to approve a revision of the regulatory map and base flood elevation.

23.607 <u>Protecting buildings</u> ---

(1) In addition to the damage prevention requirements of Section 23.606, all buildings to be located in the floodplain shall be protected from flood damage below the flood protection elevation. This building protection requirement applies to the following situations:

(a) Construction of placement of a new building valued at more than $1,000;

(b) Substantial improvements made to an existing building;

(c) Structural alterations made to an existing building that increase the floor area by more than 20%;

(d) Installing a manufactured home on a new site or a new manufactured home on an existing site (the building protection requirements do not apply to returning a manufactured home to the same site it lawfully occupied before it was moved to avoid flood damage); and

(e) Installing a travel trailer on a site for more than 180 days.

(2) Residential or nonresidential buildings can meet the building protection requirements by one of the following methods:

(a) The building may be constructed on permanent landfill in accordance with the following:

1.) The lowest floor (including basement) shall be at or above flood protection elevation;

2.) The fill shall be placed in layers no greater than one foot before compaction and should extend at least ten feet beyond the foundation before sloping below the floor protection elevation;

3.) The fill shall be protected against erosion and scour during flooding by vegetative cover, riprap, or other structural measure;

4.) The fill shall be composed of rock or soil and not incorporate debris or refuse materials; and

5.) The fill shall not adversely affect the flow of surface drainage from or onto neighboring properties; or

(b) The following may be elevated in accordance with the following:

1.) The building or improvements shall be elevated on stilts, piles, wall, or other foundation that is permanently open to flood waters;

2.) The lowest floor and all electrical, heating, ventilating, plumbing, and air conditioning equipment and utility meters shall be located at or above the flood protection elevation;

3.) If walls are used, all enclosed areas below the base flood elevation shall address hydrostatic pressures by having a minimum of two permanent openings no more than one foot above grade and providing a total net area of not less than one square inch for every one square foot of enclosed area subject to flooding below the base flood elevation;

4.) The foundation and supporting members shall be anchored and aligned in relation to flood flows and adjoining structures so as to minimize exposure to hydrodynamic forces such as current, waves, ice and floating debris;

5.) All structural component, below the flood protection elevation shall be constructed of materials resistant to flood damage;

6.) Water and sewer pipes, electrical and telephone lines, submersible pumps, and other service facilities may be located below the flood protection elevation provided they are waterproofed; and

7.) No area below the flood protection elevation shall be used for storage of items or materials.

(3) Manufactured homes and travel trailers to be installed on site for more than 180 days shall be:

(a) Elevated to or above the flood protection elevation; and

(b) Shall be anchored to resist flotation, collapse, or lateral movement by being tied down in accordance with the rules and regulations for the Illinois Mobile Home Tie-Down Act issued pursuant to 77 IL Adm. Code 870.

(4) Non-residential buildings may be a structurally floodproofed (in lieu of elevation) provided a registered professional engineer certifies that:

(a) Below the flood protection elevation the structure and attendant utility facilities are watertight and capable of resisting the effects of the base flood;

(b) The building design accounts or flood velocities, duration, rate of rise, hydrostatic and hydrodynamic forces, the effects of buoyancy, and the impact from debris and ice; and

(c) Floodproofing measures will be operable without human intervention and without an outside source of electricity.

Levees, berms, floodwalls and similar works are not considered floodproofing for the purpose of this Subsection.

23.608 <u>Subdivision and other development requirements</u> ---- The City Council shall take into account flood hazards, to the extent that they are known, in all official actions related to land management use and development.

(1) New subdivision, manufactured home parks, annexation agreements, planned unit developments, and additions to manufactured home parks and subdivisions shall meet the damage prevention and building protection standards of 23.606 and 23.607 of this ordinance. Any proposal for such development shall include the following data:

(2) In addition to such general provisions and restrictions as are applicable to the authority of the Building Commission to grant variances,

(a) The base elevation and boundary of the floodplain (where the base flood elevation is not available from an existing study) the applicant shall be responsible for calculating the base flood elevation;

(b) The boundary of the floodway when applicable; and

(c) A signed statement by a registered professional engineer that the proposed plat or plan accounts for changes in the drainage of surface waters in accordance with the Illinois Plat Act (765 IL Compiled Statutes 205/2) as now or hereafter amended.

(3) Public health standards must be met for all floodplain development. In addition to the requirements of 23.606 and 23.607, the following standards apply:

(a) No development in the floodplain shall include locating or storing chemicals, explosives, buoyant materials, flammable liquids, pollutants, or other hazardous or toxic materials below the flood protection elevation unless such materials are stored in a storage tank or floodproofed building constructed according to the requirements of 23.607 of this ordinance.

(b) New and replacement sanitary sewer lines and on-site waste disposal systems may be permitted providing all manholes or other above ground openings located below the flood protection elevation are watertight.

(4) All other activities defined as development shall be designed so as not to alter flood flows or increase potential flood damages.

23.609 **<u>Variances</u>** --- Whenever the standard of this ordinance place undue hardship on a specific development proposal, the applicant may apply to the Building Commission for a variance.

(1) Established in accordance with Article XVIII (Building Commission) of Chapter 11 (Boards and Commissions) of this Municipal Code.

(2) No variance shall otherwise be granted by the Building Commission unless the applicant demonstrates that:

(a) The development activity cannot be located outside the floodplain;

(b) An exceptional hardship would result if the variance were not granted;

(c) The relief requested is the minimum necessary;

(d) There will be no additional threat to public health or safety, or creation of a nuisance;

(e) There wilt be no additional public expense for flood protection, rescue or relief operations, policing, or repairs to roads, utilities, or other public facilities

(f) The applicant's circumstances are unique and do not establish a pattern inconsistent with the intent of the NFIP; and

(g) All other required state and federal permits have been obtained.

(3) The Building Commission shall notify an applicant in writing that a variance from the requirements of the building protection standards of 23.607 that would lessen the degree of protection to a building will:

(a) Result in increased premium rates for flood insurance up to $25 for $100 of insurance coverage;

(b) Increase the risks to life and property; and

(c) Require that the applicant proceed with knowledge of these risks and that the applicant acknowledge in writing the assumption of the risk and liability.

(4) Variances to the building protection requirements of 23.607 of this ordinance requested in connection with the reconstruction, repair or alteration of a site or building included on the National Register of Historic Places or the Illinois Register of Historic Places may be granted using criteria more permissive than the requirements of Subsection 23.609(1)(a)-(e).

23.610 <u>Disclaimer of liability</u> --- The degree of protection required by this ordinance is considered reasonable for regulatory purposes and is based on available information derived from engineering and scientific methods of study. Larger floods may occur or flood heights may be increased by man-made or natural causes. This ordinance does not imply that development either inside or outside of the floodplain will be free from flooding or damage. This ordinance does not create liability on the part of the city or any officer or employee thereof for any flood damage that results from reliance on this ordinance or any administrative decision made lawfully thereunder.

23.611 <u>Penalties</u> --- The City Engineering may determine upon due investigation that a violation of the minimum standards of this Article exists and after such owner fails after ten (10) days notice to correct the violation on his or her property, the city may make application to the Circuit Court for an injunction requiring conformance with this Article or make such other order as the court deems necessary to secure compliance with this Article. Any person, firm or corporation who or which violates any of the provisions of this title shall, in addition to such other relief as the law may afford, be subject to punishment as provided in Chapter 32 of this Code. Nothing herein shall prevent the city from taking such other lawful action to prevent or remedy any violations. All costs connected therewith shall accrue to the person or persons responsible.

23.612 <u>Abrogation and greater restrictions</u> --- This ordinance repeals and replaces other ordinances adopted by the City Council to fulfill the requirements of the National Flood Insurance Program including but not necessarily limited to, ordinance nos. 8073 and 8250. However, this ordinance does not repeal the original resolution or ordinance adopted to achieve eligibility in the program. Nor does this ordinance repeal, abrogate, or impair any existing easements, covenants, or deed restrictions. Where this ordinance and other ordinance easements, covenants, or deed restrictions conflict or overlap, whichever imposes the more stringent restrictions shall prevail.

ARTICEL VII SMOKE DETECTORS

Section 23.701 <u>Definitions</u> --- For the purposes of this act:

Approved smoke detector or **detector** means a smoke detector of the ionization or photoelectric type, which complies with all the requirements of the rules and regulations of the Illinois State Fire Marshall which rules and regulations are incorporated in this Code by this reference.

Dwelling unit means a room or suite of rooms used for human habitation, and includes a single family residence as well as each living unit of a multiple family residence and each living unit in a mixed-use building.

23.702 <u>Smoke detectors required</u> ---

(1) **Generally**: Every dwelling unit (whether a single or multiple family residence or a mixed-use building) shall be equipped with at least one approved smoke detector in an operating condition within 15 feet of every room used for sleeping purpose. The detector shall be installed on the ceiling and at least 6 inches from any wall, or on a wall located between 4 and 6 inches from the ceiling.

(2) **Single family residences**: Every single family residence shall have at least one approved smoke detector installed on every story of the residence including basements, but not including unoccupied attics. In residences with split levels, a smoke detector installed on the upper level shall suffice for the adjacent lower level if the lower level is less than one full story below the upper level; however, if there is an intervening door between the adjacent levels, a smoke detector shall be installed on each level.

(3) **Multiple family and mixed-use buildings**: Every structure which (1) contains more than one dwelling unit, or (2) contains at least one dwelling unit and is a mixed-use structure, shall contain at least one approved smoke detector at the uppermost ceiling of each interior stairwell including basements. The detector shall be installed on the ceiling, at least 6 inches from the wall, or on a wall located between 4 and 6 inches from the ceiling.

(4) **Leased premises - responsibilities**: It shall be the responsibility of the owner of the structure leased to or occupied by a person or persons other than the owner (herein "tenant") to supply and install all required detectors. The owner shall be responsible for making reasonable efforts to test and maintain detectors in common stairwells and hallways. It shall be the responsibility of a tenant or occupant to test and to provide general maintenance for the detectors within the tenant's or occupant's dwelling unit or rooming unit, and to notify the owner or the authorized agent of the owner in writing of any deficiencies which the tenant or occupant cannot correct. The owner shall be responsible for providing one tenant or occupant per dwelling unit with written information regarding smoke detector testing and maintenance.

The tenant or occupant shall be responsible for replacement of any required batteries in the smoke detector in the tenant's or occupant's dwelling unit, except that the owner shall ensure that such batteries are in operating condition at the time the tenant or occupant takes possession of the dwelling unit. The tenant or occupant shall provide the owner or the authorized agent of the owner with access to the dwelling unit to correct any deficiencies in the smoke detector which have been reported in writing to the owner or the authorized agent of the owner.

23.703 **Existing structures** --- The requirements of this Section shall apply to and become effective July 1, 1988, as to any dwelling unit in existence ten (10) days after the publication of this ordinance required by law. Except as provided in 28.104, the smoke detectors required in such dwelling units may be either battery powered or wired into the structure's AC power line, and need not be interconnected.

23.704 **Newer substantially remodeled structures** --- In the case of any dwelling unit that is newly constructed, reconstructed or substantially remodeled after _____1988, the requirements of this section shall apply beginning on the first day of occupancy of the dwelling unit after such construction, reconstruction or substantial remodeling. The smoke detectors required in such dwelling unit shall be permanently wired into the structure's AC power line and if more than one detector is required to be installed within the dwelling unit, the detectors shall be wired so that the actuation of one detector will actuate all the detectors on the dwelling unit.

23.705 **Alternative compliance** --- Compliance a with an applicable federal building code which requires the installation and maintenance of smoke detectors in a manner different from this Code, but providing a level of safety for occupants which is equal to or greater than that provided by this Code, shall be deemed to be in compliance with this Code, and the requirements of such more stringent law shall govern over the requirements of this Code.

23.706 **Penalty** --- Failure to install or maintain in operating conditions any smoke detector required by this code shall in addition to such other relief as the law may afford, a punishable by a fine of not less than $100.00 or more than $500.00.

ARTICLE VIII ONE AND TWO FAMILY DWELLINGS

Section 23.801 <u>Adoption of the International Residential Code for One and Two Family Dwellings (2000)</u> --- The City of Quincy hereby adopts and incorporates herein by this reference as fully as if set out herein, as specific criteria for regulating and controlling of the design, construction prefabrication, equipment or appliance installation, quality of materials, use and occupancy, location, and repair of detached one and two family dwellings not more than three stories in height within the corporate limits of the City of Quincy and all contiguous and unincorporated territory to the extent and as provided by Chapter 29 (Zoning) of the Municipal Code of the City of Quincy (1980) (hereafter referred to as "MCCQ"), the provisions of the International Residential Code for One and Two Family Dwellings (2000 Edition) (hereinafter referred to as "IRC"), of the International Code Council. All such design, construction, prefabrication, equipment or appliance installation, materials, use and occupancy, location and repair of one and two family dwellings not more than three (3) stories in height shall conform to the IRC. One (1) copy of the IRC hereby adopted has been filed and is to remain on file in the office of the City Clerk for public use, and inspection and examination. The adoption of the IRC is subject to the following:

(1) IRC-R101.1 (Title) shall have inserted therein "City of Quincy" where provision is made for the name of the jurisdiction adopting said code.

(2) IRC-R103 (Department of Building Safety) is not hereby adopted, providing in lieu thereof that any reference to Department of Building Safety shall refer to Section 10.404 of the MCCQ.

(3) IRC-R105 (Permits) is not hereby adopted, providing in lieu thereof that any reference to Permits shall refer to Section 29.1101 (Permits) of Chapter 29 (Zoning) of the MCCQ.

(4) IRC-R108 (Fees) is not hereby adopted, providing in lieu thereof that any reference to fees shall refer to Section 29.1101.2 (Fees) of the MCCQ. The fee for each plan examination, building permit and inspection shall be paid in accordance with the schedule set forth therein.

(5) IRC-R112 is not hereby adopted, providing in lieu thereof that any owner or person who is aggrieved or affected by an order, ruling, decision or interpretation of the Building Inspector or other enforcing officer in any of the matters relative to the interpretation or enforcement of any of the provisions of the IRC may appeal the order, ruling, decision or interpretation to the Building Commission established by and in accordance with Section 11.1801 (Building Commission) of the MCCQ.

(6) In addition to the penalties provided in IRC-113, the City may institute appropriate actions to prevent unlawful construction, to restrain, correct or abate a violation, to prevent illegal occupancy of a building, structure or premises, or to stop an illegal act, conduct business or use of a building or structure on or about any premises.

(7) IRC-310.1.1 (Minimum Opening Area) provisions regarding minimum net clear openings are not hereby adopted and in lieu thereof emergency escape and rescue openings shall have a minimum net clear opening of 5.0 square feet.

(8) IRC-310.1.2 (Minimum Opening Height) provisions regarding minimum opening height are not hereby adopted and in lieu thereof the minimum net clear opening shall be 22 inches.

(9) IRC Chapters 25 (Plumbing Administration), 26 (General Plumbing Requirements), 27 (Plumbing Fixtures), 28 (Water Heaters), 29 (Water Supply and Distribution), 30 (Sanitary

Drainage), 31 (Vents), 32 (Traps), 33 (Electrical General Requirements), 34 (Electrical Definitions), 35 (Services), 36 (Branch Circuit and Feeder Requirements), 37 (Wiring Methods), 38 (Power and Lighting Distributions), 39 (Devices and Lighting Fixtures), 40 (Appliance Installation) and 42 (Class 2 Remote-Control, Signaling and Power-Limited Circuits) are not hereby adopted.

23.802 <u>Appeal</u> - - - Any person who is aggrieved or effected by an order, ruling, decision or interpretation of the Building Inspector or other enforcing officer in any of the matters relative to the interpretation or enforcement of any of the provisions of the IRC may appeal the order, ruling, decision or interpretation to the Building Commission established by and in accordance with Section 11.1801 (Building Commission) of the MCCQ.

23.803 <u>Violations and Penalties</u> - - -

(1) **Unlawful acts:** It shall be unlawful for any person, firm or corporation to erect, construct, alter, extend, repair, remove, demolish, use or occupy any building or structure or equipment regulated by the IRC, or cause the same to be done in conflict with or in violation of any of the provisions of the IRC as hereby adopted.

(2) **Notice:** The Building Inspector or other enforcing officer shall serve a notice or order on one (1) or more persons, firms or corporation responsible for the erection, construction, alteration, extension, repair, removal, demolition, use or occupancy of a building or structure or equipment in violation of the provisions of the IRC, in violation of a detailed statement or a plan approved thereunder, or in violation of a permit or certificate issued under the provisions of the IRC. Such order shall direct the discontinuance of the illegal action or condition or the abatement of the violation. For this purpose, the owner, lessee or licensee of the building or structure or equipment shall be considered responsible as well as any person, firm or corporation engaged in such activities.

(3) **Prosecution:** If a notice of the Building Inspector or other enforcing officer is not complied with forthwith or according to its terms, the Building Inspector or other enforcing officer may initiate proceedings through the Quincy Police Department for violation thereof or request that the City of Quincy Legal Department institute appropriate proceedings as law or in equity to restrain, correct or abate such violation, require the removal or termination of the unlawful use of the building or structure or equipment in violation of the provisions of the IRC of the order or direction made pursuant thereto.

(4) **Penalties:** Any person, firm or corporation who or which violates any of the provisions of this title shall, in addition to such other relief as the law may afford, be punishable as set forth in Chapter 32 of the MCCQ.

(5) **Abatement of violation:** The imposition of penalties shall not preclude the institution of appropriate access to prevent unlawful construction, to restrain, correct or abate a violation, to prevent illegal occupancy of a building, structure or premises, or to stop an illegal act, conduct business or use of a building or structure on or about any premises.

CHAPTER 24

PLUMBING AND SEWERS

ARTICLE I	PLUMBING AND SEWERS
ARTICLE II	SEPTIC TANKS
ARTICLE III	SWIMMING POOLS
ARTICLE IV	DEFINITIONS
ARTICLE V	USE OF PUBLIC SEWERS REQUIRED
ARTICLE VI	PRIVATE SEWAGE DISPOSAL
ARTICLE VII	BUILDING SEWERS & CONNECTIONS
ARTICLE VIII	GENERAL SEWER USE REQUIREMENTS
ARTICLE IX	PRETREATMENT OF WASTEWATER
ARTICLE X	WASTEWATER DISCHARGE PERMIT APPLICATION
ARTICLE XI	WASTEWATER DISCHARGE PERMIT ISSUANCE PROCESS
ARTICLE XII	REPORTING REQUIREMENTS
ARTICLE XIII	COMPLIANCE MONITORING
ARTICLE XIV	ADMINISTRATIVE ENFORCEMENT REMEDIES
ARTICEL XV	JUDICIAL ENFORCEMENT REMEDIES
ARTICEL XVI	SUPPLEMENTAL ENFORCEMENT ACTION
ARTICLE XVII	AFFIRMATIVE DEFENSES TO DISCHARGE VIOLATIONS
ARTICLE XVIII	WASTEWATER SERVICE CHARGES
ARTICLE XIX	GENERAL PROVISIONS

ARTICLE 1 PLUMBING AND SEWERS

Section 24.101 <u>Permit required</u> ---

(l) Unless otherwise provided, no plumbing shall be installed, replaced, modified or repaired in any place in the city unless a permit therefore is first obtained from the Plumbing Inspector. Installation, replacement, modification or repair of plumbing shall include changes in the piping to or from plumbing fixtures or involving the removal, replacement, installation or reinstallation of any pipe or plumbing fixture. Plumbing fixtures shall include by way of example, but not be limited to water heaters, toilet fixtures, lavatories, sinks and the like. Permits may be issued by the Plumbing Inspector for plumbing work performed by an owner/occupant or a lessee/occupant of a single family residence for the purpose of installing, altering, or repairing the plumbing system of such single family residence, provided that such plumbing shall comply with all applicable plumbing laws, rules and regulations and provided further that said owner/occupant or lessee/occupant shall not employ any person not duly licensed as hereinafter set forth to assist him or her in such work. Except as provided herein, plumbing permits shall only be issued to a duly certified or licensed plumber under the provisions of an act in relation to the licensing and regulation of plumbers (Ill. Rev. Stat. ch. 111 sec. 1101 et. seq.) or other applicable law of the State of Illinois. Any such application for a permit shall state the name of the applicant, the name of the plumber who will have charge of the plumbing work, and the nature and extent of the proposed installation, replacement, modification or repairs.

(2) **Minor repairs, maintenance or replacement**: A plumbing permit shall not be required for repairs to existing faucets, drain cleaning or other repairs or maintenance of a like nature or for repair or replacement of existing plumbing fixtures provided said repair or replacement does not require or result in the modification or change of location of the plumbing fixtures or pipes.

24.102 <u>Fees</u> ---

(1) **Generally**: Except as otherwise provided in subparagraph (2) no permit shall be issued until a prescribed fee has been paid by the applicant to the Plumbing Inspector.

Fees:

(a) Minimum fee for permit (including up to two (2) trap openings):

Effective Until 1/1/02	Effect. 1/1/03	Effect. 1/1/04	Effect. 1/1/05	Effect. 1/1/06	Effect. 1/1/07
$20.00	$22.00	$24.00	$26.00	$28.00	$30.00

(b) Three (3) or more trap openings:

per trap opening	$9.00	$10.00	$11.00	$12.00	$13.00	$14.00

(2) **Exemption**: No fee shall be required for any permit issued for the installation of water heaters or boilers.

24.103 <u>Inspections</u> --- The Plumbing Inspector shall make or cause to be made such inspections as may be necessary to insure compliance with the provisions of this Chapter.

24.104 <u>Tests</u> --- All plumbing fixtures installed shall be subjected to either the air or water test, under the supervision of the Plumbing Inspector.

24.105 <u>New plumbing - exposure for inspection</u> --- In all buildings hereafter erected, both public and private, and in all buildings already built or erected wherein any plumbing is hereafter installed or wherein any sewer connection pipe shall be hereafter repaired or changed except for minor repairs, on the sewer side of the trap, the drain, soil, rainwater, and other pipe or pipes connected directly or indirectly into any drain, soil or waste pipe, and all traps shall be exposed for view for inspection and test by the Plumbing Inspector, and shall not be covered until such test is made.

24.106 <u>Separate drainage for buildings</u> --- Every building shall be separately and independently connected with a sewer when there is such in the street abutting on the lot occupied by such building or within one hundred (100) feet of any portion of such lot. The entire plumbing and drainage system of every building shall be entirely separate and independent from that of any other building, except where there are two buildings on one lot, one in the rear of the other; then if there is no sewer in the alley to which the rear building can be connected, the sewer in front of the building may be extended to serve the rear building. All sewers from the public sewer to every building shall be constructed either of cast iron soil pipe; schedule 40 Polyvinyl Chloride (P.V.C.) or schedule 40 Acrylonitrile/Butadiene/Styrene (A.B.S.).

24.107 <u>Water service pipe</u> --- Every building in which plumbing fixtures are installed and are for human use, occupancy or habitation, shall be provided with an ample supply of pure and wholesome water with one inch or larger service copper pipe, type L.

Every building in which plumbing fixtures are installed and are for human use, occupancy, or habitation shall be provided with an ample supply of potable water with the minimum size of any water service connection to be one (1) inch. Service pipe may be either copper or plastic. Copper pipe shall be of one inch nominal pipe size. It shall have an outside diameter of not less than 1.125 inches and a wall thickness of not less than .065 inches for type K soft temper conforming to A.S.T.M. B-88 and B-251. Plastic pipe shall be of a type approved by the National Sanitation Foundation (N.S.F.) and be marked according to the foundation requirements applicable to A.S.T.M. and commercial product standards for the type of material selected and the conditions of service. Plastic piping shall a rated at 160 PSI minimum at 73.4 F.

24.108 <u>Plumbing Code</u> --- Except as may otherwise specifically be provided in this Code, any reference in this Code to the Plumbing Code or to plumbing regulations shall mean the minimum code of standards for plumbing, as promulgated and as may hereinafter from time to time be amended by the Department of Public Health of the State of Illinois, as provided in Section 35 of the Illinois Plumbing License Law (I11. Rev. Stat. ch. 111, Sec.1133), which minimum code of standards is incorporated herein by this reference.

24.108 <u>Penalty</u> --- Any person, firm or corporation who violates any of the provisions of this title shall, in addition to such other relief as the law may afford, be punishable as set forth in Chapter 32 of this Code.

ARTICLE 11 SEPTIC TANKS

Section 24.201 **Sewage disposal facilities required** --- Every building or structure in the city used for residence, business, trade, industry or meeting purposes shall be equipped with properly constructed and installed adequate sewage disposal facilities. The plumbing in all such places shall conform to the ordinances of the city and the laws of the state relative thereto.

Any such premises not connected with a sanitary sewer system shall be equipped with an adequate septic tank.

Outhouses are hereby prohibited.

24.202 **Septic tanks - requirements** --- In addition to compliance with the requirements of the National Plumbing Code, known as the Domestic Commerce Series, No. 28, June 1951, each such tank shall be located at least 20 feet from any building and 50 feet from any well or cistern, and shall be constructed of twelve gauge steel, monolithic concrete, or of brick or concrete blocks adequately coated inside so as to be impervious to water. Baffle shall be located from 6" to 9" away from the inlet and outlet and must extend 12" beneath the sewer level in the tank. Each tank must be equipped with a man hole or similar suitably covered opening to permit inspection or cleaning.

The feeder sewer from the tank to the laterals of the disposal field shall be equipped with a distribution box and shall be constructed of vitrified bell-and-spigot tile with cemented joints and shall be laid with a grade of one foot per one hundred feet; disposal field tile shall be located at least seventy-five feet distant from any well and ten feet from the tank, and thirty feet from any building used for human habitation. No lateral shall be closer than ten feet to any lot line. There shall be at least two hundred feet of disposal field tile, unless additional amounts are required by the Adams County Health Department, consisting of 4" drain tile laid with open joints. Disposal tiles shall be laid to a depth of not more than two feet on a slope not to exceed 6" per one hundred feet.

Backfill in the trench under the tile stall be at least 6" of coarse gravel or crushed stone. Earth backfill shall have two feet of gravel or crushed stone over the tile and shall be well tamped.

No septic tank or any pipes leading to or from the same shall be covered unless and until such tank and pipes have been inspected by the Adams County Health Department and found to be in compliance with the ordinances of the city and with the state laws pertaining thereto.

24.203 **Building - occupancy** --- It shall be unlawful to use or occupy any premises as habitations, or for business trade, industry or meeting purposes in the city unless such premises are equipped with sewage disposal facilities consisting of either a connection with a sanitary sewer system or a proper septic tank, as provided by ordinance.

24.204 **Penalty** --- Any person, firm or corporation show violates any of the provisions of this title shall, in addition to such other relief as the law may afford, be punishable as set forth in Chapter 32 of this Code.

ARTICLE III SWIMMING POOLS

Section 24.301 **Application of provisions** ---- All provisions of this Article pertaining to maintenance and sanitation shall apply to all swimming pools in the city, whether heretofore or hereafter constructed. Provisions pertaining to construction shall apply to pools constructed after the effective date of this Code.

24.302 **Aprons and scum disposal** --- An apron of impervious material at least four feet wide shall encircle the pool and shall slope away from the pool, to drain surface water. Scum gutters or other effective method of removing scum shall be provided for all pools.

24.303 **Safety equipment** --- Pools shall be equipped with grab rails and ladders firmly fastened to the construction. Diving boards will not be permitted in depths less than seven feet of water. Pools shall be equipped with at least one standard life saver ring float easily demountable where readily accessible. Pool area shall be entirely enclosed with a fence not less than four feet high with positive locking gates. Gates must be kept closed and locked at all times except when the pool is in use and under direct supervision of an adult.

24.304 **Plumbing** --- In addition to compliance with the requirements of the National Plumbing Code, known as the Domestic Commerce Series No. 28, June 1951, swimming pools shall not be drained into city sanitary sewers, but may be connected to storm drains or gutters, or pumped or syphoned into ravines or natural water courses. Any permanent water supply to pool shall be equipped with a vacuum breaker to prevent back syphonage to water supply system.

24.305 **Water supply** --- All pools shall be equipped to provide constant re-circulation and filtration of water.

24.306 **Electrical equipment** --- All metal parts of underwater electrical fixtures shall be grounded. If flexible cable is used, ground wire must be incorporated therein. Portable equipment such as pumps, vacuum cleaners, etc. must be grounded.

24.307 **Maintenance** ---- Pool water shall be kept chlorinated so as to insure freedom from harmful bacteria and infectious germs.

24.308 **Inspection** --- The City Council may from time to time instruct a qualified representative of the city to inspect privately owned swimming pools and to make reports and recommendations with respect to the operation and maintenance thereof for the purpose of keeping the same sanitary and protecting the health of persons using the same.

24.309 **Infectious disease** --- It shall be a lawful for any persons having an infectious or contagious disease to use any swimming pool, and no person in charge of any pool shall knowingly permit such use.

24.310 **Location** --- All pools shall be located so as to comply with any requirements of the National Electrical Code, as adopted under the Municipal Code, relating to overhead wires.

24.311 **<u>Penalty</u>** --- Any person, firm or corporation who violates any of the provisions of this title shall, in addition to such other relief as the law may afford, be punishable as set forth in Chapter 32 of this Code.

ARTICLE IV DEFINITIONS

Section 24.401 **General** --- For the purposes of this ordinance, the following definitions are adopted:

(1) **Abbreviations**: The following abbreviations shall have the designated meanings:

(a) BOD - Biochemical Oxygen Demand
(b) CFR - Code of Federal Regulations
(c) COD - Chemical Oxygen Demand
(d) EPA - U.S. Environmental Protection Agency
(e) gpd - gallons per day
(f) mg/1 - milligrams per liter
(g) NPDES - National Pollutant Discharge Elimination System
(h) POTW - Publicly Owned Treatment Works
(i) RCRA - Resource Conservation and Recovery Act
(j) SIC - Standard Industrial Classification
(k) SWDA - Solid Waste Disposal Act, 42 USC 6901, et. seq.
(1) TSS - Total Suspended Solids
(m) U.S.C. - United States Code

(2) **Authorized representative of the user**:

(a) If the user is a corporation:

1.) The president, secretary, treasurer, or a vice president of the corporation in charge of a principal business function, or any other person who performs similar policy or decision making functions for the corporation; or

2.) The manager of one or more manufacturing, production, or operation facilities employing more than two hundred fifty (250) persons or having gross annual sales or expenditures exceeding twenty-five (25) million dollars, if authority to sign documents has been assigned or delegated to the manager in accordance with corporate procedures.

(b) If the user is a partnership or sole proprietorship: a general partner or proprietor, respectively.

(c) If the user is a Federal, State or local governmental facility: a director or highest official appointed or designated to oversee the operation and performance of the activities of the government facility, or their designee.

(d) The individuals described in paragraphs (a) through (c), above, may designate another authorized representative if the authorization is in writing, the authorization specifies the individual or position responsible for the overall operation of the facility from which the discharge originates or having overall responsibility for environmental matters for the company, and the written authorization is submitted to the Superintendent of Sanitation.

(3) **Clarification of word usage**: Shall is mandatory; may is permissible.

(4) **Person**: Person shall mean any and all persons, natural or artificial, including any individual, firm, company, municipal or private corporation, association, society, institution, enterprise, governmental agency or other entity.

24.402 **Federal Government**----

(1) **Act of "the act"**: The Federal Water Pollution Control Act, also known as the Clean Water Act, as amended, 33 U.S.C. 1251 et. seq.

(2) **Administrator**: Means the administrator of the U.S. Environmental Protection Agency.

(3) **Approval authority**: Means the director in a NPDES State with an approved pretreatment program and the appropriate regional administrator in a non-NPDES state or NPDES state without an approved state pretreatment program.

(4) **Categorical pretreatment standard or categorical standard**: Any regulation containing pollutant discharge limits promulgated by EPA in accordance with sections 307 (b) and (c) of the act (33 U.S.C. 1317) which apply to a specific category of users and which appear in 40 CFR Chapter 1, Subchapter N. parts 405-471.

(5) **Environmental Protection Agency or EPA**: Means the U.S. Environmental Protection Agency or, where appropriate, the Regional Water Management Division Director, or other duly authorized official of said agency.

(6) **NPDES**: NPDES permit means any permit or equivalent document or requirements issued by the administrator, or, where appropriate by the director, after enactment of the Federal Water Pollution Control Amendment of 1972, to regulate the discharge of pollutants pursuant to Section 402 of the federal act.

(7) **National Pretreatment Standards**: Means prohibited discharge standards, categorical pretreatment standards or local limits.

(8) **National Prohibited Discharge Standards or Prohibited Discharges**: Absolute prohibitions against the discharge of certain substances.

(9) **Pretreatment requirements**: Means any substantive or procedural requirement related to pretreatment imposed on a user, other than a pretreatment standard.

(10) **Regional Administrator**: Means that person appointed by the administrator of the U.S. Environmental Protection Agency for the area of the State of Illinois and other states.

(11) **Standard Industrial Classification (SIC)**: Means a classification pursuant to the Standard Industrial Classification Manual Issued by the Executive Office of the President, Office of Management and Budget.

24.403 <u>State Government</u> ---

(1) **Director**: Means the director of the Illinois Environmental Protection Agency.

(2) **NPDES State**: Means a state of the United States which has been granted authority by the administrator of the U.S. Environmental Protection Agency to administer the NPDES Permit Program.

(3) **State**: Means the State of Illinois.

(4) **State act**: Means the Illinois Anti Pollution Band Act of 1970.

(5) **State grant**: Means the State of Illinois participation in the financing of the construction of treatment works as provided for by the Illinois Anti-Pollution Band Act and or making such grants and filed with the Secretary of State of the State of Illinois.

24.404 <u>Local Government</u> ---

(1) **Approved POTW Pretreatment Program**: Means a pretreatment program as defined in the act which has received the approval of the State of Illinois Environmental Protection Agency or the United States Environmental Protection Agency.

(2) **Approving Authority**: Means the Superintendent of Sanitation.

(3) **City**: Means the City of Quincy or the City Council of the City of Quincy.

(4) **Control Authority**: Means the Superintendent of Sanitation if the POTW's submission for its pretreatment program has been approved or the approval authority if the submission has not been approved.

(5) **Publicly Owned Treatment Works (POTW)**: A "treatment work", as defined by section 212 of the act (33 U.SC. 1292) which is owned in this instance by the City of Quincy. This definition included any devices or systems used in the collection, storage, treatment, recycling, and reclamation of sewage or industrial wastes of a liquid nature and any conveyances which convey wastewater to a treatment plant.

(6) **POTW Treatment Plant**: Means that portion of the POTW designed to provide treatment to wastewater.

(7) **Sanitation Committee**: Means the joint Sanitation Committee of the City Council and the Public Works Commission.

(8) **Superintendent or Superintendent of Sanitation**: Means the person designated by the City of Quincy to supervise the operation of the POTW, and who is charged with certain duties and responsibilities by this ordinance, or his duly authorized representative.

24.405 <u>Sewer types and appurtenances</u> ---

(1) **Building drain**: Means that part of the lowest piping of a drainage system which receives the discharge from soil, waste, and other drainage pipes inside the walls of the building and conveys it to the building sewer or other approved point of discharge, beginning five (5) feet (1.5 meters) outside the inner face of the building wall.

(2) **Building sewer**: Means the extension from the building drain to the public sewer or other place of disposal.

(3) **Combined sewer**: Means a sewer which is designed and intended to receive wastewater, storm, surface, and groundwater drainage.

(4) **Easement**: Means an acquired legal right for the specific use of land owned by others.

(5) **Public sewer**: Means a sewer provided by, or subject to the jurisdiction of the City of Quincy.

(6) **Sanitary sewer**: Means a sewer that conveys sewage or industrial wastes or a combination of both, and into which storm, surface, and groundwaters or unpolluted industrial wastes are not intentionally admitted.

(7) **Sewer**: Means a pipe or conduit for conveying sewage or any other waste liquids, including storm, surface, and groundwater drainage.

(8) **Sewerage**: Means the system of sewers and appurtenances for the collection, transportation and pumping of sewage.

(9) **Storm sewer**: Means a sewer that carries storm, surface, and groundwater drainage but excludes sewage and industrial wastes other than unpolluted cooling water.

24.406 <u>Wastewater and its characteristics</u> --

(1) **Biochemical Oxygen Demand of BOD**: Means the quantity of oxygen utilized in the biochemical oxidationof organic matter under standard laboratory procedures for five (5) days at 20 centigrade, usually expressed as a concentration (e.g., mg/1).

(2) **Compatible Pollutant**: Means biochemical oxygen demand, suspended solids, pH, and fecal coliform bacterial; plus any additional pollutants identified in the POTW’s NPDES

permit, where the POTW is designed to treat such pollutants to the degree required by the POTW's NPDES permit.

(3) **Direct discharge**: Means the discharge of treated or untreated wastewater directly to the waters of the State of Illinois.

(4) **Effluent criteria**: Defined in any applicable NPDES permit.

(5) **Existing source**: Means any source of discharge, the construction or operation of which commenced prior to the publication by EPA of proposed categorical pretreatment standards, which will be applicable to such source if the standard is thereafter promulgated in accordance with section 307 of the act.

(6) **Floatable oil**: Means oil, fat, or grease in a physical state such that it will separate by gravity from wastewater by treatment in an approved pretreatment facility. A wastewater shall be considered free of floatable oil if it is properly pretreated and the wastewater does not interfere with the treatment plant or collection system.

(7) **Garbage**: Means solid wastes from the domestic and commercial preparation, cooking, and dispensing of food and from the handling, storage and sale of produce.

(8) **Grab sample**: Means a sample which is taken from a wastestream without regard to the flow in the wastestream and over a period of time not to exceed fifteen (15) minutes.

(9) **Incompatible pollutant**: Means all pollutants other than compatible pollutants.

(10) **Indirect discharge**: Means the discharge or the introduction of non-domestic pollutants from any source regulated under section 307 (b), (c), and (d) of the act, (33 U.S.C. 1317), into the POTW, including septic or holding tank waste discharged into the system.

(11) **Industrial waste**: Means any solid liquid or gaseous substance discharged, permitted to flow or escaping from any industrial, manufacturing, commercial, or business establishment or process or from the development, recovery or processing of any natural resource as distinct from sanitary sewage.

(12) **Instantaneous maximum allowable discharge limit**: Means the maximum concentration of a pollutant allowed to be discharged at any time, determined from the analysis of any discrete or composited sample collected, independent of the industrial flow rate and the duration of the sampling event.

(13) **Interference**: Means a discharge, which alone or in conjunction with a discharge or discharges from other sources, inhibits or disrupts the POTW, its treatment processes or operations or its sludge processes, use or disposal; and therefore, is a cause of a violation of the city's NPDES permit or of the prevention of sewage sludge use or disposal in compliance with any of the following statutory/regulatory provisions or permits issued thereunder, or any more stringent state or local regulations: Section 405 of the act; the Solid Waste Disposal Act, including Title II commonly referred to as the Resource Conservation and Recovery Act (RCRA); any state regulations contained in any state sludge management plan prepared pursuant to subtitle D of the Solid Waste Disposal Act; the Clean Air Act; the Toxic Substances Control Act; and the Marine Protection, Research, and Sanctuaries Act.

(14) **Major contributing industry**: Means:

(a) A user subject to categorical pretreatment standards; or

(b) A user that:

1.) Discharges an average of twenty-five thousand (25,000) gpd or more of process wastewater to the POTW (excluding sanitary, noncontract cooling, and boiler blowdown wastewater);

2.) Contributes a process wastestream which makes up five (5) percent or more of the average dry weather hydraulic or organic capacity of the POTW treatment plant; or

3.) Is designated as such by the city on the basis that it has a reasonable potential for adversely affecting the POTW's operation or for violating any pretreatment standard or requirement.

(c) Upon a finding that a user meeting the criteria in subsection (b) has no reasonable potential for adversely affecting the POTW's operation or for violating any pretreatment standard or requirement, the city may at any time, on its own initiative or in response to a petition received from a user, and in accordance with procedures in 40 CFR 403.8 (f)(6), determine hat such user should not be considered a significant industrial user.

(15) **Medical waste**: Means isolation wastes, infectious agents, human blood and blood products, pathological wastes, sharps, body parts, contaminated bedding, surgical wastes, potentially contaminated laboratory wastes, and dialysis wastes.

(16) **Milligram per liter**: Means a unit of the concentration of water or wastewater constituent. It is 0.01 grams of the constituent in 1,000 milliliters of water. It has replaced the unit formerly used commonly, parts per million, to which it is approximately equivalent, in reporting the results of water and wastewater analysis.

(17) **New source**: Means:

(a) Any building, structure, facility or installation from which there is (or may be) a discharge of pollutants, the construction of which commenced after the publication or proposed pretreatment standards under section 307(c) of the act which will be applicable to such source if such standards are thereafter promulgated in accordance with that section, provided that:

1.) The building, structure, facility, or installation is constructed at a site at which no other source is located; or

2.) The building, structure, facility, or installation totally replaces the process or production equipment that causes the discharge of pollutants at an existing source; or

3.) The production or wastewater generating processes of the building, structure, facility, or installation are substantially independent of an existing source at the same site. In determining whether these are substantially independent, factors such as the extent to which the new facility is integrated with the existing plant, and the extent to which the new facility is engaged in the same general type of activity as the existing source, should be considered.

(b) Construction on a site at which an existing source is located results in a modification rather than a new source if the construction does not create a new building, structure, facility, or installation meeting the criteria of section (a) (2) or (3) above but otherwise alters, replaces, or adds to existing process or production equipment.

(c) Construction of a new source as defined under this paragraph has commenced if the owner or operator has:

1.) Begun, or caused to begin, as part of a continuous on site construction program.

a) Any placement, assembly, or installation of facilities or equipment; or

b) Significant site preparation work including clearing, excavation, or removal of existing building, structures, or facilities which is necessary for the placement, assembly, or installation of new source facilities or equipment;

2.) Entered into a binding contractual obligation for the purchase of facilities or equipment which are intended to be used in its operation within a reasonable time. Options to

purchase or contracts which can be terminated or modifies without substantial loss, and contracts for feasibility, engineering, and design studies do not constitute a contractual obligation under this paragraph.

(18) **Non-contact cooling water or cooling water**: Means water used for cooling which does not come into direct contact with any raw material, intermediate product, waste produce, or finished product.

(19) **ph**: Means the logarithm (base 10) of the reciprocal of the hydrogen ion concentration expressed by one of the procedures outlined in Standard Methods.

(20) **ppm**: Means parts per million by weight.

(21) **Pass through**: Means a discharge which exits the POTW into waters of the United States in quantities or concentrations which, alone or in conjunction with a discharge or discharges from other sources, is a cause of a violation of any requirement of (the city's) NPDES permit, including an increase in the magnitude or duration of a violation.

(22) **Pollution**: Means the man-made or man-induced alteration of the chemical, physical, biological and radiological integrits of water.

(23) **Pollutant**: Means dredged spoil, solid waste, incinerator residue, filter backwash, sewage, garbage, sewage sludge, munitions, medical wastes, chemical wastes, biological materials, radioactive materials, heat, wrecked or discarded equipment, rock, sand, cellar dirt, municipal, agricultural and industrial wastes, and certain characteristics of wastewater (e.g., ph, temperature, TSS, turbidity, color, BOD, COD, toxicity, or odor).

(24) **Population equivalent**: Means the term used to evaluate the impact of industrial or other waste on a treatment works or stream. One population equivalent is 100 gallons of sewage per day, containing 0.17 pounds of BOD and 0.22 pounds of suspended solids.

(25) **Pretreatment**: Means the reduction of the amount of pollutants, the elimination of pollutants, or the alteration of the nature of pollutant properties in wastewater prior to, or in lieu of introducing such pollutants into the POTW. This reduction or alteration can be obtained by physical, chemical, or biological processes; by process changes; or by other means, except by diluting the concentration of the pollutants unless allowed by an applicable pretreatment standard.

(26) **Properly shredded garbage**: Means the wastes from the preparation, cooking, and dispensing of food that have been shredded to a degree that all particles will be carried freely under the flow conditions normally prevailing in public sewers.

(27) **Septic tank waste or holding tank waste**: Means any sewage from holding tanks such as vessels, chemical toilets, campers, trailers, and septic tanks.

(28) **Sewage**: Means human excrement and gray water (household showers, dishwashing operations, etc.) and used interchangeably with wastewater.

(29) **Significant industrial user**: Means the same as major contributing industry and may be used interchangeable.

(30) **Significant violation**: Means a violation of the ordinance which remains uncorrected forty-five (45) days after notification of non-compliance; which is part of a pattern of non-compliance over a twelve (12) month period; which involves failure to accurately report non-compliance or which results in the city exercising its emergency authority.

(31) **Slug load or slug**: Means any discharge of water, sewage or industrial waste which in concentration of any given constituent or in quantity of flow exceeds for any period of

duration longer than fifteen (15) minutes more than five (5) times the average twenty-four (24) hour concentration or flows during normal operations.

(32) **Standard methods**: Means the examination and analytical procedures set forth in the most recent edition of Standard Methods for the Examination of Water and Wastewater published jointly by the American Public Health Association, the American Water Works Association and the Water Pollution Control Federation.

(33) **Suspended solids**: Means the total suspended matter that floats on the surface of, or is suspended in, water, wastewater, or other liquid, and which is removable by laboratory filtering.

(34) **Toxic pollutants**: Means any pollutant or combination of pollutants listed as toxic in regulations promulgated by the administrator of the EPA under provisions of section 307(a) of the act.

(35) **Unpolluted water**: Means water of quality equal to or better than the effluent criteria in effect or water, that would not cause violation of receiving water quality standards and would not be benefited by discharge to the sanitary sewer and wastewater treatment facilities provided.

(36) **Wastewater**: Means liquid and water-carried industrial wastes and sewage from residential dwellings commercial buildings, industrial and manufacturing facilities, and institutions, whether treated or untreated, which are contributed to the POTW.

(37) **Wastewater Treatment Plant or Treatment Plant**: Means the same as Publicly Owned Treatment Plant.

(38) **Water Quality Standards**: Defined in the Water Pollution Regulations Of Illinois.

24.407 <u>Watercourse and connections</u> ---

(1) **Natural outlet**: Means any outlet into a watercourse, pond, ditch, lake, or other body of surface or groundwater.

(2) **Stormwater**: Means any flow occurring during or following any form of natural precipitation, and resulting from such precipitation, including snowmelt.

(3) **Stormwater runoff**: Means that portion of the precipitation that is drained into the sewers.

(4) **Waters of the state**: Means all streams, lakes, ponds, marshes, watercourses, waterways, wells, springs, reservoirs, aquifiers, irrigation systems, drainage systems, and all other bodies or accumulations of water, surface or underground, natural or artificial, public or private, which are contained within, flow through, or border upon the state or any portion thereof.

(5) **Watercourse**: Means a channel in which a flow of water occurs, either continuously or intermittently.

24.408 <u>User types</u> ---

(1) **Industrial user or user**: Means a source of indirect discharge, as defined in Section 24.406(10).

(2) **Residential or commercial or non-industrial use**: Means any user of the treatment works not classified as an industrial user or excluded as an industrial user.

(3) **Used class**: Means the type of user either "residential or commercial" (non-industrial) or "industrial".

24.409 <u>Types of charges</u> ---

(1) **Basic user charge**: Means the basic assessment levied on all users of the public sewer system.

(2) **Debt service charge**: Amount to be paid each billing period for payment of interest, principal and coverage of bonds outstanding.

(3) **Replacement**: Means expenditures for obtaining and installing equipment, accessories, or appurtenances which are necessary during the service life of the treatment works to maintain the capacity and performance for which such works were designed and constructed. The term "operation and maintenance" includes replacement.

(4) **Reserve fund charge**: Means a revolving fund for expansion and construction of interceptor sewer system,

(5) **Sewerage fund**: Principal accounting designation for all revenues received in the operation of the sewerage system.

(6) **Surcharge**: Means the assessment in addition to the basic user charge and debt service charge which is levied on those persons whose wastes are greater in strength than the concentration values established in Article X.

(7) **Useful life**: Means the estimated period during which the collection system and/or treatment works will be operated and shall be 30 years from the date of start-up of any wastewater facilities constructed with a state grant.

(8) **User charge**: Means the same as wastewater service charge.

(9) **Wastewater service charge**: The charge per quarter or month levied on all users of the wastewater facilities. The service charge shall be as outlined in Article XVIII and shall consist of the total or the basic user charge, a surcharge, reserve fund charge, and a debt service charge, if applicable.

ARTICLE V USE OF PUBLIC SEWERS REQUIRED

Section 24.501 **Unsanitary deposits** --- It shall be unlawful for any person to place, deposit, or permit to be deposited in any unsanitary manner on public or private property within the City of Quincy or in any area under the jurisdiction of said city, any human or animal excrement, garbage, or other objectionable waste.

24.502 **Treatment required** --- It shall be a lawful to discharge to any natural outlet within the City of Quincy, or in any area under the jurisdiction of said city, any sewage or other polluted waters, except where suitable treatment has been provided in accordance with subsequent provisions of this ordinance.

24.503 **Septic tanks** --- Except as hereinafter provided, it shall be unlawful to construct or maintain any privy, privy vault, septic tank, cesspool, or other facility intended or used or the disposal of sewage.

24.504 **Sewer required** --- Every building having plumbing fixtures installed and intended for human habitation, occupancy, or use on premises abutting on a street, alley or easement in which there is a public sanitary sewer or which is so located as to have a sanitary sewer available within one hundred feet of any portion of such lot, shall have a separate and independent connection with that sewer.

24.506 **Sewer connections and maintenance** --- Every building owner required to connect to the public sanitary sewer shall be required to pay the cost of the lateral or connecting sewer. The building owner shall also be responsible for any maintenance of the connection sewer including repair or necessary reconstruction. The duty and responsibility for maintenance shall apply to subsequent owners of the building and property.

ARTICLE VI PRIVATE SEWAGE DISPOSAL

Section 24.601 **Permit required** --- Where a public sanitary or combined sewer is not available under the provisions of Section 24.504 the building sewer shall be connected to a private sewage disposal system complying with the ordinances, Rules and Regulations of the Adams County Board, Adams County Health Department, and State of Illinois Environmental Protection Agency after obtaining permits therefore.

24.602 **Time limit** --- At such time as a public sewer becomes available to a property served by a private sewage disposal system, as provided in Section 24.504, a direct connection shall be made to the public sewer in compliance with this ordinance within a sixty (60) day period following written notice from the city, and any septic tanks, cesspools, and similar private sewage disposal facilities shall be abandoned and filled with suitable material if it is determined by the Superintendent of Sanitation or the Adams County Health Department that such private sewage disposal system is unsanitary, causing detrimental effects to the environment.

ARTICLE VII BUILDING SEWERS AND CONNECTIONS

Section 24.701 License required --- No person shall engage in the work or business of a plumbing contractor on property other than his own, either as a master or employing plumber or a journeyman plumber, without first having obtained a certificate from a duly qualified board of examiners of the State of Illinois.

24.702 Sewer permits --- No connection shall be made to the municipal sewer or water system without first having obtained a permit therefore. Applications for such permit shall be made to the Superintendent of Sanitation and shall be accompanied by a statement showing the purpose of the connection, the premises to be served, and the specifications of the pipe to be connected and the drain from the building to the sewer pipe. No permit shall be issued new connections outside the corporate limits unless the use of such land and building or buildings thereon are in compliance with all subdivision and zoning ordinances of the City of Quincy applicable hereto. In addition thereto, the buildings shall be in compliance with the provisions of the BOCA basic building code, and the plumbing and electrical codes of the City of Quincy. Where a building permit issued by the City of Quincy and permit fees paid at the time said buildings are constructed, there shall exist a presumption of compliance with all of subject ordinances. Permit fees will be the same as though property were all in the city. If after passage of this ordinance buildings are constructed and no building permit is applies for or issued, and subsequently a sewer or water permit is applied for, the city must cause proper inspections to be made to determine compliance with the applicable city codes. If all the applicable codes have been complied with, the city shall issue a certificate of compliance, provided that a fee shall be paid to the city, which fee will be equivalent to the fee which would have been charged for a building permit at the time the buildings were constructed. This fee shall be in addition to any other fees required by the City Code.

24.703 Sewer connection fees ---

(1) The basic fee for connection to the municipal sewer system to serve a single family dwelling shall be $50.00 per connection.

(2) Connection serving single family dwellings within the Cedar, Curtis or Emery Creek drainage basins into a sanitary sewer shall be the basic fee plus $300.00 per connection.

(3) Connection serving single family dwelling within the Cedar, Curtis or Emery Creek drainage basins into a sanitary sewer constructed by the city after the effective date of this Article shall be the basic fee plus $500.00 per connection, if the connection is less than 750 feet from the existing sewer; provided, however, that a connection serving a single family dwelling within such drainage basins into a sanitary sewer constructed by the city after the effective date of this Article, which is tributary to another sewer that was constructed by the same person or corporation, but not on later acquired land but for a previous development, such person or corporation shall pay an additional fee as determined above based on distance from the sewer, but calculated as if both the current development and the previous development were constructed at the same time.

(4) Connection serving a single family dwelling within the Cedar, Curtis or Emery Creek drainage basins into a sanitary sewer constructed by the city after the effective date of this Article shall be the basic fee plus $400.00 per connection if the connection is more than 750 feet but less

than 1,500 feet from an existing sewer; provided however, that a connection serving single family dwelling within such drainage basins into a sanitary sewer constructed by the city after the effective date of this Article, which is tributary to another sewer that was constructed by the same person or corporation, but not on later acquired land, but for a previous development, such person or corporation shall pay an additional fee as determined above based on distance from the sewer, but calculated as if both the current development and the previous development were constructed at the same time.

(5) The fee for connection serving two or more family dwellings or mobile home parks shall be at the above rates for the first unit and at the rate of one-half (1/2) the above rates for all additional units.

(6) A connection serving facilities other than dwellings within the Cedar, Curtis or Emery Creek drainage basins into a sanitary sewer constructed by the city after the effective date of this Article shall be at the single family rate or at eight cents ($.08) per square foot of building area, whichever is greater; provided, however, that the City Council may waive or modify the square foot fee in specific cases where, after hearing by the Sanitation Committee, it is determined that the applicant has exempt status under section 501 (c) (3) of the Internal Revenue Code or it is so determined upon application in writing explaining that because of certain exceptional conditions peculiar to the applicant's property or its environmental or contemplated use or construction thereon, that strict application of such fee would result in excessive hardship so as to amount to a practical confiscation of such property. The fee for a connection serving a facility other than dwellings in any other area not specifically stated in this subsection shall be the same as if the facility were a single family dwelling.

(7) Sewer connection permits shall be valid only for sixty (60) days after insurance.

(8) A connection serving facilities other than dwellings within the Cedar, Curtis or Emery Creek drainage basins into a sanitary sewer shall be at the single family rate or at two cents ($0.02) per square foot of building area, whichever is greater; provided, however, that the City council may waive or modify the square foot fee in specific cases where, after hearing by the Sanitation Committee, it is determined that the applicant has exempt status under section 501 (c) (3) of the Internal Revenue Code or it is so determined, upon application in writing explaining that because of certain exceptional conditions peculiar to the applicant's property or its environmental or contemplated use or construction thereon, that strict application of such fee would result in excessive hardship so as to amount to a practical confiscation of such property.

(9) A connection serving facilities other than dwellings within the Cedar, Curtis or Emery Creek drainage basins into a sanitary sewer shall be at the basic fee for connection, or at one-half cent ($0.005) per square foot of building area, whichever is greater; provided, however, that the City Council may waive or modify the square foot fee in specific cases where, after hearing by the Sanitation Committee, it is determined that the applicant has exempt status under section 501 (c) (3) of the Internal Revenue Code or it is so determined, upon application in writing explaining that because of certain exceptional conditions peculiar to the applicant's property or its environment or contemplated use or construction thereon, the strict application of such fee would result in excessive hardship so as to amount to a practical confiscation of such property.

24.704 **<u>Extension of municipal sewer system</u>** --- Persons desiring to connection to the municipal sewer system shall bear all costs incident thereto, including the cost of any extension if the municipal sewer systems to reach their premises; provided, however, that any such extension,

other than the service connections, to a single premises, shall become the property of the city upon its completion. All extension of the municipal sewer system shall be made only at the locations and in accordance with the specifications set forth in the master plan for Quincy sewer extension. Such master plan for Quincy sewer extensions shall be available for inspection by any interested person upon request to the Sanitation Committee or its Superintendent, and shall show the location of all future mail sewer extensions and structures appurtenant thereto and general specifications for sewer construction as the Sanitation Committee shall from time to time by resolution determine such extensions, structures and specifications to be. All plans for such extension shall be prepared by a registered professional engineer and shall be approved to the Sanitation Committee and the Illinois Environmental Protection Agency. Inspection of the construction of such extension shall be provided by the city but the cost of such inspection shall be deposited with the city before construction is commenced by the person desiring to have such system extended. A deposit of the estimated cost of any work to be performed by the city in connection with such sewer extension shall be made by the person desiring such extension before such work is commenced. Adequate insurance, as determined by the Sanitation Committee, shall be provided during construction, on protecting the City of Quincy. A surety bond in the sum equal to the estimated cost of construction of the extension to secure to the City of Quincy the actual construction of such extension in accordance with the applicable ordinances of the City of Quincy and of the plans and specifications therefore, and to hold the city harmless of any claims whatsoever arising out of the construction of such extension shall be delivered to the Sanitation Committee before construction of such extension is commenced. Easements acceptable to the Sanitation Committee for constructing and maintaining requested as well as future extensions of the municipal sewer system, as shown on the master plan for Quincy sewer extensions, shall be provided and recorded at no expense to the city before any extension of such system shall be made. Such easements and all rights incident thereto shall become the property of the city. It is hereby declared to be the policy of the City of Quincy to extend the utmost cooperation permitted by law in the obtaining of such easements, and upon completion of any extension of the municipal sewer system and acceptance thereof by the Sanitation committee, a sum equal to the amount collected by the City of Quincy for connection fees to such extension, as provided in Section 24.703 hereof, shall be paid to the person making such extension, or his assigns, until the sum so paid equals the cost of extending that portion of such sewer exactly as it is shown on the master plan for Quincy sewer extensions, as such cost is determined to be by the Sanitation Committee. Such refunds shall be made to persons extending the municipal sewer system in the inverse order in period of time in which such extensions where made. No reimbursement shall be made by the city for costs of interests, bonds, easements, permits, licenses, insurance or administrative overhead of the person extending the municipal sewer system. The Sanitation Committee shall have the authority to waive much of the requirements of this Section as it shall deem in the best interest of the city for lateral extensions serving an area with a potential of less than fifteen (15) service connections.

24.705 **<u>Sewage lift stations</u>** --- Cost of construction and operation of permanent lift stations shall be borne by the person or persons desiring such lift stations and none shall be constructed except as shown on the master plan for Quincy sewer extensions. Permanent lift stations and pressure lines serving more than two separately owned properties shall be built only on easements of the City of Quincy and shall be maintained and operated by the City of Quincy.

Charges for the maintenance and operation of such lift stations shall be apportioned and billed as an additional use charge among the users thereof as the Sanitation committee shall determine. Private lift stations or sewage trash pumps serving not more than two separately owned properties and temporary lift stations are prohibited except under extreme circumstances as determined by the Sanitation Committee, and all cost of construction and operation of the same shall be borne by the person constructing the same.

24.706 **Sewer taps and tapping fees** --- That all taps into the sewers of the Quincy municipal sewer system, other than at existing wyes or connections, shall be made only by authorize sewer personnel upon direction of the Superintendent of Sanitation, except other qualified persons may make taps to the sewer upon receiving written permission from the Superintendent of Sanitation and installed under the direction of personnel appointed by the city. Such permission for others to tap into the sewer system will be issued for each separate connection and shall be valid for one connection only. The applicant for sewer tap shall provide safe working space necessary to make a sewer tap. The Sanitation committee shall make the following service charges for making taps (connections) into sewer systems regardless of the size of the opening or the tap:

to tap:		Minimum	$25.00
	8”	Mains	$30.00
	10”	Mains	$32.50
	12”	Mains	$35.00
	15”	Mains	$40.00
	18”	Mains	$45.00
	21”	Mains	$47.50
	24”	Mains	$50.00
	27”	Mains	$52.50
	30”	Mains	$55.00

Such service charges shall be in addition to permit fees and the connection and use charges otherwise provided for by ordinance.

24.707 **Specifications** --- The size, slope, alignment, materials of construction of a building sewer, and the methods to be used in excavating, placing of the pipe, jointing, testing, and backfilling the trench, shall all conform to the requirements of the building and plumbing code or other applicable rules and regulations of the city. In the absence of code provisions or in amplification thereof, the materials and procedures set forth in appropriate specifications of the American Society of Testing Materials, Water Pollution Control Federation Manual of Practice No. 9, and Standard Specifications for Water and Sewer Main Construction In Illinois shall apply. All work done on any plumbing system shall be performed in an efficient and workmanlike manner, and materials used shall be adequate for the purpose, and of standard material, all as prescribed by the Illinois State Plumbing Code.

24.708 **Separate connections** --- It shall be unlawful for any person, firm or corporation to connect any sanitary sewer or any sewer carrying any substance other than surface water, storm

water, ground water, roof runoff, subsurface drainage, cooling water and unpolluted industrial process water into any public sewer constructed primarily for the drainage of rain or storm water.

24.709 <u>Inspection</u> --- The applicant for the building sewer permit shall notify the Superintendent of Sanitation when the building sewer and connection to the public sewer is ready for inspection. The connection shall be made under the supervision of the Superintendent of Sanitation or his representative.

24.710 <u>Barricades and restoration</u> --- All excavations for building sewer installation shall be adequately guarded with barricades and lights so as to protect the public from hazard. Streets, sidewalks, parkways, and other public property disturbed in the course of the work shall be restored in a manner satisfactory to the city.

ARTICLE VIII GENERAL SEWER USE REQUIREMENTS

Section 24.801 **Purpose and policy** --- This ordinance sets forth uniform requirements of users of the Publicly Owned Treatment Works for the City of Quincy and enables the city to comply with all applicable State and Federal laws, including the Clean Water Act (33 U.S.C. 1251 et. seq.), and the General Pretreatment Regulations (40 C.F.R. Part 403). The ordinance shall apply, to all users of the POTW. The ordinance authorizes the issuance of wastewater discharge permits; provides for monitoring, compliance, and enforcement activities; establishes administrative review procedures; requires user reporting; and provides for the setting of fees for the equitable distribution of costs resulting from the program established herein. The objectives of the ordinance are:

(1) To prevent the introduction of pollutants into the Publicly Owned Treatment Works that will interfere with its operation;

(2) To prevent the introduction of pollutants into the Public Owned Treatment Works that will pass through the Publicly Owned Treatment Works, inadequately treated, into receiving waters, or otherwise be incompatible with the Publicly Owned Treatment Works;

(3) To protect both Publicly Owned Treatment Works personnel who may be affected by wastewater and sludge in the course of their employment and the general public;

(4) To promote reuse and recycling of industrial wastewater and sludge from the Publicly Owned Treatment Works;

(5) To provide for fees for the equitable distribution of the cost of operation, maintenance, and improvement of the Publicly Owned Treatment Works; and

(6) To enable the city to comply with its National Pollutant Discharge Elimination System permit conditions, sludge use and disposal requirements, and any other Federal or State laws to which the Publicly Owned Treatment Works is subject.

24.802 **Prohibited discharge standards** ---

(1) **General prohibitions**: No user shall introduce or cause to be introduced into the POTW any pollutant or wastewater which causes pass through or interference. These general prohibitions apply to all users of the POTW whether or not they are subject to categorical pretreatment standards or any other National, State or local pretreatment standards or requirements.

(2) **Special prohibitions**: No user shall introduce or cause to be introduced or process or store in such a manner that they could be discharged into the POTW the following pollutants, substances, or wastewater:

(a) Pollutants which create a fire or explosive hazard in the POTW, including but not limited to, wastestreams with a closed-cup flashpoint of less than 140° F (60° C) using the test methods specified in 40 CFR 261.21;

(b) Wastewater having a pH less them 5.5 or greater than 10.0, or otherwise causing corrosive structural damage to the POTW or equipment;

(c) Solid or viscous substances which may cause obstruction to the flow in a sewer or other interference with the operation of the wastewater treatment facilities such as, but not limited to: grease, garbage with particles greater than one half inch (1/2") in any dimension, animal guts or tissues, paunch manure, bones, hair, hides, or fleshings, entrails, whole blood, feathers, ashes, cinders, sand, spent lime, stone or marble dust, metal, glass, straw, shavings,

grass clippings, rags, spent grains, spent hops, waste paper, wood, plastics, gas, tar, asphalt residues, residues from refining or processing of fuel or lubricating oil, mud or glass grinding or polishing wastes.

(d) Pollutants, including oxygen-demanding pollutants (BOD, etc.) released in a discharge at a flow rate and/or pollutant concentration which, either singly or by interaction with other pollutants, will cause interference with the POTW;

(e) Wastewater having a temperature greater than 150° F (65° C), or which will inhibit biological activity in the treatment plant resulting in interference, but in no case wastewater which causes the temperature at the introduction into the treatment plant to exceed 104° F (40° C);

(f) Petroleum oil, non-biodegradable cutting oil, or products of mineral oil origin, in amounts that will cause interference or pass through;

(g) Pollutants which result in the presence of toxic gases, vapors, or fumes within the POTW in a quantity that may cause acute worker health and safety problems;

(h) Trucked or hauled pollutants, except at discharge points designated by the superintendent in accordance with this ordinance;

(i) Noxious or malodorous liquids, gases, solids, or other wastewater which, either singly or by interaction with other wastes, are sufficient to create a public nuisance or a hazard to life, or to prevent entry into the sewers for maintenance or repair;

(j) Wastewater which imparts color which cannot be removed by the treatment process, such as, but not limited to, dye wastes and vegetable tanning solutions, which consequently imparts color to the treatment plant's effluent, thereby violating the city's NPDES permit;

(k) Wastewater containing any radioactive wastes or isotopes except in compliance with applicable State or Federal regulations;

(l) Storm water, surface water, ground water, artesian well water, roof runoff, subsurface drainage, swimming pool drainage, condensate, deionized water, noncontact cooling water, and unpolluted wastewater, unless specifically authorized by the superintendent;

(m) Sludges, screenings, or other residues from the pretreatment of industrial wastes;

(n) Medical wastes, except as specifically authorized by the superintendent in a wastewater discharge permit;

(o) Wastewater causing, alone or in conjunction with other sources, the treatment plant's effluent to fail a toxicity test;

(p) Detergents, surface-active agents, or other substances which may cause excessive foaming in the POTW;

(q) Fats, oils, or greases of animal or vegetable origin in concentrations greater than 100 mg/1 or containing substances which may solidify or become viscous at temperatures between 32° F (0°C) and 150° F (65° C) .

(r) Wastewater causing two readings on an explosion hazard meter at the point of discharge into the POTW, or at any point in the POTW, of more than five percent (5%) or any single reading over (10%) of the lower explosive limit of the meter.

Prohibited materials include, but are not limited to, gasoline, kerosene, naptha, benzene, toluene, peroxide, chlorates, perchlorates, bromates, carbides, hydrides, sulfides, or other similar substance which may cause a fire hazard.

24.803 <u>Substance requiring approval</u> --- No person shall discharge or cause to be discharged the following described substances, materials, waters, or wastes if it appears likely in the opinion of the superintendent that such wastes can harm either the sewers, sewage treatment process, or equipment; have an adverse effect on the receiving stream; or can otherwise endanger life, limb, public property or constitute a nuisance. In forming his opinion as to the acceptability of these wastes, the Superintendent of Sanitation will give consideration to such factors as the quantities of subject wastes in relation to flows and velocities in the sewers, nature of the sewage treatment process, capacity of the sewage treatment plant, degree of treatability of wastes in the sewage treatment plant, and maximum limits established by regulatory agencies. The substances requiring prior approval are:

(1) Any garbage that has not been properly shredded.

(2) Materials which exert or cause:

(a) Unusual concentrations of inert suspended solids (such as, but not limited to, fullers earth, lime slurries, and lime residues) or of dissolved solids (such as, but not limited to, dye wastes and vegetable tanning solutions);

(b) Unusual BOD, chemical oxygen demand, or chlorine requirements in such quantities as to constitute to a significant load on the sewage treatment works;

(3) Waters or wastes containing substances which are not amenable to treatment or reduction by the sewage treatment process employed, or are amenable to treatment only to such degree that the sewage treatment plant effluent cannot meet the requirements of agencies having jurisdiction over discharge to the receiving waters.

24.804 <u>National categorical pretreatment standards</u> --- The categorical pretreatment standards found at 40 CFR Chapter 1, Subchapter N, parts 405-471 are hereby incorporated.

(1) Where a categorical pretreatment standard is expressed only in terms of either the mass or the concentration of a pollutant in wastewater, the superintendent may impose equivalent concentration or mass limits in accordance with 40 CFR 403.6 (c).

(2) When wastewater subject to a categorical pretreatment standard is mixed with wastewater not regulated by the same standard, the superintendent shall impose an alternate unit using the combined wastestream formula in 40 CFR 403.6(e).

(3) A user may obtain a variance from a categorical pretreatment standard if the user can prove, pursuant to the procedural and substantive provisions in 40 CFR 403.13, that factors relating to its discharge are fundamentally different from the factors considered by EPA when developing the categorical pretreatment standard.

(4) A user may obtain a net gross adjustment to a categorical standard in accordance with 40 CFR 403.15.

24.805 <u>Local limits</u> --- The following pollutant limits are established to protect against pass through and interference. No person shall discharge wastewaters containing in excess of the following instantaneous maximum allowable discharge limits:

0.18	Mg/L	Arsenic
0.24	Mg/L	Cadmium
4.40	Mg/L	Chromium
3.38	Mg/L	Copper

1.20	Mg/L	Cyanide
124.4	Mg/L	Iron
1.40	Mg/L	Lead
0.0031	Mg/L	Mercury
2.11	Mg/L	Nickel
0.22	Mg/L	Selenium
0.43	Mg/L	Silver
2.13	Mg/L	total toxic organic (TTO)
2.61	Mg/L	Zinc

The above limits apply at the point where the wastewater is discharged to the POTW. All concentrations for metallic substances are for "total" metal unless indicated otherwise. The superintendent may impose mass limitations in addition to, or in place of, the concentration based limitations above.

24.806 Right of revision --- The City reserves the right to establish, by ordinance or in wastewater discharge permits, more stringent standards or requirements on discharges to the POTW in order to prevent interference or pass through at the POTW.

24.807 Dilution --- No user shall ever increase the use of process water, or in any way attempt to dilute a discharge, as a partial or complete substitute for adequate treatment to achieve compliance with a discharge limitation unless expressly authorized by an applicable pretreatment standard or requirement. The superintendent may impose mass limitations on users who are using dilution to meet applicable pretreatment standards or requirements, or in other cases when the imposition of mass limitations is appropriate.

24.808 Stormwater discharge --- Stormwater inflow and all other unpolluted drainage shall be discharged only to such sewers as are specifically designed as combination or storm sewers, or to a natural outlet approved by the superintendent.

All new connections tributary to the combined sewer system of the City of Quincy shall be designed to minimize or delay inflow to the combined sewer system. In addition, the domestic waste connection shall be separated and distinct from the inflow connection to facilitate disconnection if a storm sewer becomes available to the property. Such disconnection of the inflow source shall occur within one (1) year of the date a storm sewer becomes available to the property.

24.809 Modification of Federal Categorical Pretreatment Standards --- Where the city's wastewater treatment system achieves consistent removal of pollutants limited by Federal Pretreatment Standards, the city may apply to the director or administrator for modification of specific limits in the Federal Pretreatment Standards. "Consistent removal" shall mean reduction in the amount of a pollutant or alteration of the nature of the pollutant by the wastewater treatment system to a less toxic or harmless state in the effluent which is achieved by the system in 95 percent (95%) of the samples taken when measured according to the procedures set forth in Section 403.7(c)(2) of (Title 40 of the Code of the Federal Regulations, part 403) - "General Pretreatment Regulations for Existing and New Sources of Pollution" promulgated pursuant to

the act. The city may modify pollutant discharge limits in the Federal Pretreatment Standards if the requirements contained in 40 CFR, part 403, section 403.7, are fulfilled and prior approval from the director or administrator is obtained.

24.810 <u>State Pretreatment Standards</u> --- State Pretreatment Standards located at Ill. Title 34 Subtitle C: water pollution parts 307 and 310 are hereby incorporated. If a State Pretreatment Standard is more stringent than either a categorical standard or a local limit, then the State Pretreatment Standard shall apply.

ARTICLE IX PRETREATMENT OF WASTEWATER

Section 24.901 <u>Pretreatment facilities required</u> --- Users shall provide wastewater treatment as necessary to comply with this ordinance and shall achieve compliance with all categorical pretreatment standards, local limits, and the prohibitions set out in Section 24.802 of this ordinance within the time limitations specified by EPA, the state, or the superintendent, whichever is more stringent. Any facilities necessary for compliance shall be provided, operated, and maintained at the user's expense. Detailed plans describing such facilities and operating procedures shall be submitted to the superintendent for review, and shall be acceptable to the superintendent before such facilities are constructed. The review of such plans and operating procedures shall in no way relieve the user from the responsibility of modifying such facilities as necessary to produce a discharge acceptable to the city under the provisions of this ordinance.

Any subsequent changes in the pretreatment facilities or method of operation shall be reported to and be acceptable to the city prior to the user's initiation of the changes. Are user required to pretreat waste prior to discharge to the POTW shall also comply with applicable rules and regulations of the State of Illinois. Such rules shall include, but not be limited to, an appropriate construction and operation permit issued by the Illinois Environmental Protection Agency and a certified and/or licensed operator.

24.902 <u>Additional pretreatment measures</u> ---

(1) Whenever deemed necessary, the superintendent may require users to restrict their discharge during peak flow periods, designate that certain wastewater be discharged only into specific sewers, relocate and/or consolidate points of discharge, separate sewage wastestreams from industrial wastestreams, and such other conditions as may be necessary to protect the POTW and determine the user's compliance with the requirement of this ordinance.

(2) The superintendent may require any person discharging into the POTW to install and maintain, on their property and at their expense, a suitable storage and flow control facility to ensure equalization of flow. A wastewater discharge permit may be issued solely for flow equalization.

(3) Users with the potential to discharge flammable substances may be required to install and maintain an approval combustible gas detection meter.

(4) Whenever deemed necessary, the superintendent may require pretreatment of any waters or wastes having:

(a) A 5-day BOD greater than 200 parts per million by weight, or

(b) A suspended solid concentration greater than 250 parts per million by weight.

(5) Grease, oil, and sand interceptors shall be provided when, in the opinion of the superintendent, they are necessary for the proper handling of wastewater containing excessive amounts of grease and oil, or sand; except that such interceptors shall not be required for residential users. All interception units shall be of type and capacity approved by the superintendent and shall be so located to be easily accessible for cleaning and inspection. Such interceptors shall be inspected, cleaned, and repaired regularly, as needed, by the user at their expense.

24.903 <u>Accidental discharge/slug control plans</u> --- At least once every 2 years, the superintendent shall evaluate whether each significant industrial user needs an accidental

discharge/slug control plan. The superintendent may require any user to develop, submit for approval, and implement such a plan. Alternatively, the superintendent may develop such a plan for any user. An accidental discharge/slug control plan shall address, at a minimum, the following:

(1) Description of discharge practices, including non-routine batch discharges:

(2) Description of stored chemicals:

(3) Procedures for immediately notifying the superintendent of any accidental or slug discharge, as require by Article 12 of this ordinance; and

(4) Procedures to prevent adverse impact from any accidental or slug discharge. Such procedures include, but are not limited to, inspection and maintenance of storage areas, handling and transfer of materials, loading and unloading operations, control of plant site runoff, worker training, building of containment structures or equipment, measures for containing toxic organic pollutants, including solvents, and/or measures and equipment for emergency response.

24.904 <u>Hauled waste</u> --- The following conditions shall apply to all wastes hauled to the POTW:

(1) Septic tank waste may be introduced into the POTW only at locations designated by the superintendent, and at such times as are established by the superintendent. Such waste shall not violate Article 8 of this ordinance or any other requirements established by the city. The superintendent may require septic tank waste haulers to obtain wastewater discharge permits.

(2) The superintendent shall require haulers of industrial waste to obtain wastewater discharge permits. The superintendent may require generator of hauled industrial waste to obtain wastewater discharge permits. The superintendent also may prohibit the disposal of hauled industrial waste. The discharge of hauled industrial waste is subject to all other requirements of this ordinance.

(3) Industrial waste haulers may discharge loads only at locations designated by the superintendent. No load may be discharged without prior consent of the superintendent. The superintendent may collect samples of each hauled load to ensure compliance with applicable standards. The superintendent may require the industrial waste hauler to provide a waste analysis of any load prior to discharge.

(4) Industrial waste haulers must provide a waste-tracking form for every load. This form shall include at a minimum the name and address of the industrial waste hauler, permit number, truck identification, names and addresses of sources of waste, and volume and characteristics of waste. The form shall identify the type of industry, known or suspected waste constitutes, and whether any wastes are RCRA hazardous wastes.

24.905 <u>Control manholes</u> --- New industrial construction, the use of which will generate other than domestic sewage, shall include installation of a control manhole, and when required by the superintendent, such necessary meters and other appurtenances in the building sewer to facilitate observation, sampling, and measurement of the wastes. Control manholes may be require by the superintendent at existing major contributing industries subject to applicable pretreatment standards in order to comply with monitoring requirements set forth in such pretreatment standards. The monitoring facility or control manhole, if required, should normally be situated on the user's premises, but the superintendent may, when such location would be impractical or

cause undue hardship on the user, allow the facility to be constructed in the public street or sidewalk area and located so that it will not be obstructed by landscaping or parked vehicles.

Where required by the city, additional control manholes or sampling chambers shall be provided at the end of each industrial process within an industrial user's facility suitable for the determination of compliance with pretreatment standards.

There shall be ample room in or near such sampling manhole or facility to allow accurate sampling and preparation of samples for analysis. The control of monitoring manhole shall be maintained at all times in a safe and proper operating condition at the user's expense.

Whether constructed on public or private property, the monitoring facilities shall be provided in accordance with the city requirements and all applicable local construction standards and specifications. Plans and specifications shall be submitted and approved by the superintendent prior to the start of construction.

24.906 Expense of maintenance --- Where preliminary treatment or flow equalizing facilities are provided, they shall be maintained continuously in satisfactory and effective operation by the owner at his expense.

24.907 Special agreements --- No statement contained herein shall be construed as preventing any special agreement or arrangement between the City of Quincy and any industrial concern whereby an industrial waste of unusual strength of character which does not violate any applicable pretreatment standard may be accepted by the city for treatment, subject to payment therefore, in accordance with Article XVIII hereof, by the industrial concern.

ARTICLE X WASTEWATER DISCHARGE PERMIT APPLICATION

Section 24.1001 Wastewater analysis --- When requested by the superintendent a user must submit information on the nature and characteristics of its wastewater within thirty (30) days of the request. The superintendent is authorized to prepare a form for this purpose and may periodically require users to update this information.

24.1002 Wastewater discharge permit requirement ---

(1) No significant industrial user shall discharge wastewater into the POTW without first obtaining a wastewater discharge permit from the superintendent, except that a significant industrial user that has filed a timely application pursuant to Section 24.1003 of this ordinance may continue to discharge for the time period specified therein.

(2) The superintendent may require other users to obtain wastewater discharge permits as necessary to carry out the purposes of this ordinance.

(3) Any violation of the terms and conditions of a wastewater discharge permit shall be deemed a violation of this ordinance and subjects the wastewater discharge permittee to the sanctions set out in Article 14 through 16 of this ordinance. Obtaining a wastewater discharge permit does not relieve a permittee of its obligation to comply with all federal and state pretreatment standards or requirements or with any other requirements of federal, state, and local law.

24.1003 Wastewater discharge permitting - existing connections --- Any user required to obtain a wastewater discharge permit who was discharging wastewater into the POTW prior to the effective date of this ordinance and who wishes to continue such discharges in the future, shall, within ninety (90) days after said date, apply to the superintendent for a wastewater discharge permit in accordance with Section 24.1005 of this ordinance, and shall not cause or allow discharges to the POTW to continue after one hundred-eighty (180) days of the effective date of this ordinance except in accordance with a wastewater discharge permit issued by the superintendent.

24.1004 Wastewater discharge permitting - new connections --- Any user required to obtain a wastewater discharge permit who proposes to begin or recommence discharging into the POTW must obtain such permit prior to the beginning or recommencing of such discharge. An application for this wastewater discharge permit, in accordance with Section 24.1005 of this ordinance, must be filed a least one hundred-twenty (120) days prior to the date upon which any discharge will begin or recommence.

24.1005 Wastewater discharge permit application contents --- All users required to obtain a wastewater discharge permit must submit a permit application. The superintendent may require all users to submit as part of an application the following information:

(1) All Information required by Article 12 of this ordinance;

(2) Description of activities, facilities, and plant processes on the premises, including a list of all raw materials and chemicals used or stored at the facility which are, or could accidentally or intentionally be, discharged to the POTW;

(3) Number and type of employees, hours of operation, and proposed or actual hours of operations;

(4) Each product produced by type, amount, process or processes, and rate of production;

(5) Type and amount of raw materials processed (average and maximum per day);

(6) Site plans, floor plans, mechanical and plumbing plans, and details to show all sewers, floor drains, any appurtenances by size, location, and elevation, and all points of discharge;

(7) Time and duration of discharges; and

(8) Any other information as may be deemed necessary by the superintendent to evaluate the wastewater discharge permit application.

Incomplete or inaccurate applications will not be processed and will be returned to the user for revision.

24.1006 <u>Application signatures and certification</u> --- All wastewater discharge permit applications and user reports must be signed by an authorized representative of the user and contain the following certification statement:

"I certify under penalty of law that this document and all attachments were prepared under my direction or supervision in accordance with a system designed to assure that qualified personnel properly gather and evaluate the information submitted. Based on my inquiry of the person or persons who manage the system, or those persons directly responsible for gathering the information, the information submitted is, to the best of my knowledge and belief, true, accurate, and complete. I am aware that there are significant penalties for submitting false information, including the possibility of fine and imprisonment for knowing violations."

24.1007 <u>Wastewater discharge permit decisions</u> --- The superintendent will evaluate the data furnished by the user and may require additional information. Within thirty (30) days of receipt of a complete wastewater discharge permit application, the superintendent will determine whether or not to issue a wastewater discharge permit. The superintendent may deny any application for a wastewater discharge permit.

ARTICLE XI WASTEWATER DISCHARGE PERMIT ISSUANCE PROCESS

Section 24.1101 <u>Wastewater discharge permit duration</u> --- A wastewater discharge permit shall be issued for a specified time period, not to exceed five (5) years from the effective date of the permit. A wastewater discharge permit may be issued for a period less than five (5) years, at the discretion of the superintendent. Each wastewater discharge permit will indicate a specific date upon which it will expire.

24.1102 <u>Wastewater discharge permit contents</u> --- A wastewater discharge permit shall include such conditions as are deemed reasonably necessary by the superintendent to prevent pass through or interference, protect the quality of the water body receiving the treatment plant's effluent, protect worker health and safety, facilitate sludge management and disposal, and protect against damage to the POTW.

(1) Wastewater discharge permits must contain:

(a) A statement that indicates wastewater discharge permit duration, which in no event shall exceed five (5) years.

(b) A statement that the wastewater discharge permit is non-transferable without prior notification to the city in accordance with Section 24.1105 of this ordinance, and provisions for furnishing the new owner or operator with a copy of the existing wastewater discharge permit;

(c) Effluent limits based on applicable pretreatment standards;

(d) Self monitoring, sampling, reporting, notification, and record keeping requirements. These requirements shall include an identification of pollutants to be monitored, sampling location, sampling frequency, and sample type based on federal, state, and local law; and

(e) A statement of applicable civil and criminal penalties for violation of pretreatment standards and requirements, and any applicable compliance schedule. Such schedule may not extend the time for compliance beyond that required by applicable federal, state, or local law.

(2) Wastewater discharge permits may contain, but need not be limited to, the following conditions:

(a) Limits on the average and/or minimum rate of discharge, time of discharge, and/or requirements for flow regulation and equalization;

(b) Requirements for the installation of pretreatment technology, pollution control, or construction of appropriate containment devices, designed to reduce, eliminate, or prevent the introduction of pollutants into the treatment, works;

(c) Requirements for the development and implementation of spill control plans or other special conditions including management practices necessary to adequately prevent accidental, unanticipated, or non-routine discharges;

(d) Development and implementation of waste minimization plans to reduce the amount of pollutants discharge to the POTW;

(e) The unit charge or schedule of user charges and fees for the management of the wastewater discharged to the POTW;

(f) Requirements for installation and maintenance of inspection and sampling facilities and equipment;

(g) A statement that compliance with the wastewater discharge permit does not relieve the permittee of responsibility for compliance with all applicable federal and state pretreatment

standards, including those which become effective during the term of the wastewater discharge permit;

(h) Compliance schedules;

(i) Requirements for submission of technical reports or discharge reports;

(j) Requirements for maintaining and retaining plant records relating to wastewater discharge as specified by the city, and affording the city access thereto;

(k) Requirements for notification of the city of any new introduction of wastewater constituents or any substantial change in the volume or character of the wastewater constituents being introduced into the wastewater treatment system.

(l) Requirements that permittee allow the POTW or its representatives ready access upon presentation of credentials at reasonable time to all parts of its premises in which a discharge source or treatment system is located or in which records required by this ordinance are kept for the purposes of inspection, sampling, examination and photocopying of said records and for the performance of any of their duties.

(m) Other conditions as deemed appropriate by the superintendent to ensure compliance with this ordinance, and state and federal laws, rules, and regulations.

24.1103 <u>Wastewater discharge permit appeals</u> --- Any person, including the user, may petition the superintendent to reconsider the terms of a wastewater discharge permit within fifteen (15) days of notice of its issuance.

(1) Failure to submit a timely petition for review shall be deemed to be a waiver of the administrative appeal.

(2) In its petition, the appealing party must indicate the wastewater discharge permit provision objected to, the reasons for this objection, and the alternative condition, if any, it seeks to place in the wastewater discharge permit.

(3) The effectiveness of the wastewater discharge permit shall not be stayed pending the appeal.

(4) If the superintendent fails to act within the fifteen (15) days, a request for reconsideration shall be deemed to be denied. Decisions not to reconsider a wastewater discharge permit, not to issue a wastewater discharge permit, or not to modify a wastewater discharge permit shall be considered final administrative actions for purposes of judicial review.

(5) Aggrieved parties seeking judicial review of the final administrative wastewater discharge permit decision must do so by filing a complaint with the appropriate court having proper jurisdiction within the State of Illinois.

24.1104 <u>Wastewater discharge permit modifications</u> --- The superintendent may modify a wastewater discharge permit for good cause, including, but not limited to, the following reasons:

(1) To incorporate any new or revised federal, state, or local pretreatment standards or requirements.

(2) To address significant alterations or additions to the user's operation, processes, or wastewater volume or character since the time of wastewater discharge permit issuance;

(3) A change in the POTW that requires a temporary or permanent reduction or elimination of the authorized discharge;

(4) Information indicating that the permitted discharge poses a threat to the city's POTW, city personnel, or the receiving waters;

(5) Violation of any terms or conditions of the wastewater discharge permit;

(6) Misrepresentations or failure to fully disclose all relevant facts in the wastewater discharge permit application or in any required reporting;

(7) Revision of or a grant of variance from categorical pretreatment standards pursuant to 40 CFR 403.13;

(8) To correct typographical or other errors in the wastewater discharge permit; or

(9) To reflect a transfer of the facility ownership or operation to a new owner or operator.

24.1105 <u>Wastewater discharge permit transfer</u> --- Wastewater discharge permits may be transferred to a new owner or operator only if the permittee gives at least thirty (30) days advance notice to the superintendent and the superintendent approves, the wastewater discharge permit transfer. The notice to the superintendent must include a written certification by the new owner or operator which:

(1) States that the new owner and/or operator has no immediate intent to change the facility's operations and processes;

(2) Identifies the specific date on which the transfer is to occur; and

(3) Acknowledges full responsibility for complying with the existing wastewater discharge permit.

Failure to provide advance notice of a transfer renders the wastewater discharge permit void as of the date of facility transfer.

24.1106 <u>Wastewater discharge permit revocation</u> --- The superintendent may revoke a wastewater discharge permit for good cause, including, but not limited to, the following reasons:

(1) Failure to notify the superintendent of significant changes to the wastewater prior to the changed discharge;

(2) Failure to provide prior notification to the superintendent of changed conditions pursuant to Article 12 of this ordinance;

(3) Misrepresentation or failure to fully disclose all relevant facts in the wastewater discharge permit application;

(4) Falsifying self-monitoring reports;

(5) Tampering with monitoring equipment;

(6) Refusing to allow the superintendent timely access to the facility premises and records;

(7) Failure to meet effluent limitations;

(8) Failure to pay fines;

(9) Failure to pay sewer charges;

(10) Failure to meet compliance schedules;

(11) Failure to complete a wastewater survey or the wastewater discharge permit application;

(12) Failure to provide advance notice to the transfer of business ownership of a permitted facility; or

(13) Violation of any pretreatment standard or requirement, or any terms of the wastewater discharge permit of this ordinance.

Wastewater discharge permits shall be voidable upon cessation of operations or transfer of business ownership. All wastewater discharge permits issued to a particular user are void upon the issuance of a new wastewater discharge permit to that user.

24.1107 <u>Wastewater discharge permit re-issuance</u> --- A user with an expiring wastewater discharge permit shall apply for a wastewater discharge permit re-issuance by submitting a complete permit application, in accordance with Section 24.1105 of this ordinance, a minimum of sixty (60) days prior to the expiration of the user's existing wastewater discharge permit.

ARTICLE XII REPORTING REQUIREMENTS

Section 24.1201 <u>Baseline monitoring reports</u> ---

(1) Within either one hundred eighty (180) days after the effective date of a categorical pretreatment standard, or the final administrative decision of a category determination under 40 CFR 403.6(a)(4), whichever is later, existing categorical users currently discharging to or scheduled to discharge to the POTW shall submit to the superintendent a report which contains the information listed in paragraph 2, below. At least ninety (90) days prior to commencement of their discharge, new sources, and sources that become categorical users subsequent to the promulgation of an applicable categorical standard, shall submit to the superintendent a report which contains the information listed in paragraph 2, below. A new source shall report the method of pretreatment it intends to use to meet applicable categorical standards. A new source also shall give estimates of its anticipated flow and quantity of pollutants to be discharged.

(2) Users described above shall submit the information set forth below.

(a) **Identifying information**: The name and address of the facility, including the name of the operator and owner.

(b) **Environmental permits**: A list of any environmental control permits held by or for the facility.

(c) **Description of the operation**: A brief description of the nature, average rate of production, and standard industrial classifications of the operation(s) carried out by such user. This description should include a schematic process diagram which indicates points of discharge to the POTW from the regulated processes.

(d) **Flow measurement**: Information showing the measured average daily and maximum daily flow, in gallons per day, to the POTW from regulated process streams and other streams, as necessary, to allow use of the combined wastestream formula set out in 40 CFR 403.6(e).

(e) **Measure of pollutants**:

1.) The categorical pretreatment standards applicable to each regulated process.

2.) The results of sampling and analysis identifying the nature and concentration, and/or mass, where required by the standard or by the superintendent, of regulated pollutants in the discharge from each regulated process. Instantaneous, daily maximum, and long-term average concentrations, or mass, where required, shall be reported. The sample shall be representative of daily operations and shall be analyzed in accordance with procedures set out in Section 24.1210 of this ordinance.

3.) Sampling must be performed in accordance with procedures set out in Section 24.1211 of this ordinance.

(f) **Certification**: A statement, reviewed by the user's authorized representative and certified by a qualified professional, indicating whether pretreatment standards are being met on a consistent basis, and, if not, whether additional operation and maintenance (0&M) and/or additional pretreatment is required to meet the pretreatment standards and requirements.

(g) **Compliance schedule**: If additional pretreatment and/or 0&M will be required to meet the pretreatment standards, the shortest schedule by which the user will provide such additional pretreatment and/or 0&M. The completion date in this schedule shall not be later than the compliance date established for the applicable pretreatment standards. A compliance

schedule pursuant to this Section must meet the requirements set out in Section 24.1202 of this ordinance.

(h) **Signature and certification**: All baseline monitoring reports must be signed and certified in accordance with Section 24.1006 of this ordinance.

24.1202 <u>Compliance schedule progress reports</u> --- The following conditions shall apply to the compliance schedule required by Section 24.1201(2)(g) of this ordinance:

(1) The schedule shall contain progress increments in the form of dates for the commencement and completion of major events leading to the construction and operation of additional pretreatment required for the user to meet the applicable pretreatment standards (such events include, but are not limited to, hiring an engineer, completing preliminary and final plans, executing contracts for major components, commencing and completing construction, and beginning and conducting routine operation);

(2) No increment referred to above shall exceed nine (9) months;

(3) The user shall submit a progress report to the superintendent no later than fourteen (14) days following each date in the schedule and the final date of compliance including, as a minimum, whether or not it complied with the increment of progress, the reason for any delay, and, if appropriate, the steps being taken by the user to return to the established schedule; and

(4) In no event shall more than nine (9) months elapse between such progress reports to the superintendent.

24.1203 <u>Reports on compliance with categorical pretreatment standard deadline</u> --- Within ninety (90) days following the date for final compliance with applicable categorical pretreatment standards, or in the case of a new source following commencement of the introduction of wastewater into the POTW, any user subject to such pretreatment standards and requirements shall submit to the superintendent a report containing the information described in Section 24.1201(2)(d-f) of this ordinance. For users subject to equivalent mass or concentration limits established in accordance with the procedures in 40 CFR 403.6(c), this report shall contain a reasonable measure of the user's long-term production rate. For all other users subject to categorical pretreatment standards expressed in terms of allowable pollutant discharge per unit or production (or other measure of operation), this report shall include the user's actual production during the appropriate sampling period. All compliance reports must be signed and certified in accordance with Section 24.1206 of this ordinance.

24.1204 <u>Periodic compliance reports</u> ---

(1) Any user subject to a pretreatment standard, after the compliance date of such pretreatment standard, or, in the case of a new source, after commencement of the discharge into the POTW, shall submit to the superintendent by January 15 or July 15 of each year, unless required more frequently in the pretreatment standard or by the superintendent, a report indicating the nature and concentration, of pollutants in the effluent which are limited by such pretreatment standards. In addition, this report shall include a record of measured or estimated average and maximum daily flows for the reporting period. All periodic compliance reports must be signed and certified in accordance with Section 24.1006 of this ordinance.

(2) All wastewater samples must be representative of the user's discharge. Wastewater monitoring and flow measurement facilities shall be properly operated, kept clean, and

maintained in good working order at all times. The failure of a user to keep its monitoring facility in good working order shall not be grounds for the user to claim that sample results are unrepresentative of its discharge.

(3) If a user subject to the reporting requirement in this Section monitors any pollutant more frequently than required by the superintendent, using the procedures prescribed in Section 24.1211 of this ordinance, the results of this monitoring shall be included in the report.

24.1205 <u>Reports of changed conditions</u> --- Each user must notify the superintendent of any planned significant changes to the user's operations or system which might alter the nature, quality, or volume of its wastewater at least thirty (30) days before the change.

(1) The superintendent may require the user to submit such information as may be deemed necessary to evaluate the changed condition, including the submission of a wastewater discharge permit application under Section 24.1005 of this ordinance.

(2) The superintendent may issue a wastewater discharge permit under Section 24.1007 of this ordinance or modify an existing wastewater discharge permit under Section 24.1104 of this ordinance in response to changed conditions or anticipated changed conditions.

(3) For purposes of this requirement, significant changes include, but are not limited to, flow increases of twenty percent (20%) or greater, and the discharge of any previously unreported pollutants.

24.1206 <u>Reports of potential problems</u> ---

(1) In the case of any discharge, including, but not limited to, accidental discharges, discharges of a non-routine, episodic nature, a non-customary batch discharge, or a slug load that may cause potential problems for the POTW, the user shall immediately telephone and notify the superintendent of the incident. This notification shall include the location of the discharge, type of waste, concentration and volume, if known, and corrective actions taken by the user.

(2) Within five (5) days following such discharge, the user shall, unless waived by the superintendent, submit a detailed written report describing the cause(s) of the discharge and the measures to be taken by the user to prevent similar future occurrences. Such notification shall not relieve the user of any expense, loss, damage, or other liability which may be incurred as a result of damage to the POTW, natural resources, or any other damage to person or property; nor shall such notification relieve the user of any fines, penalties, or other liability which may be imposed pursuant to this ordinance.

(3) A notice shall be permanently posted on the user's bulletin board or other prominent place advising employees whom to call in the event of a discharge described in paragraph (1) above. Employers shall ensure that all employees, who may cause such a discharge to occur, are advised of the emergency notification procedure.

24.1207 <u>Reports from unpermitted users</u> --- All users not required to obtain a wastewater discharge permit shall provide appropriate reports to the superintendent as the superintendent may require.

24.1208 <u>Notice of violation/repeat sampling and reporting</u> --- If sampling performed by a user indicates a violation, the user must notify the superintendent within twenty-four (24) hours of becoming aware of the violation. The user shall also repeat the sampling and analysis and

submit the results of the repeat analysis to the superintendent within thirty (30) days after becoming aware of the violation. The user is not required to re-sample if the superintendent monitors at the user's facility at least once a month, or if the superintendent samples between the user's initial sampling and when the user receives the results of this sampling.

24.1209 <u>Notification of the discharge of hazardous waste</u> ---

(1) Any user who commences the discharge of hazardous waste shall notify the POTW, the EPA Regional Waste Management Division Director, and state hazardous waste authorities, in writing, or any discharge into the POTW of a substance which, if otherwise disposed of, would be hazardous waste under 40 CFR part 261. Such notification must include the name of the hazardous waste as set forth in 40 CFR part 261, the EPA hazardous waste number, and the type of discharge (continuous, batch, or other). If the user discharges more than one hundred (100) kilograms of such waste per calendar month to the POTW, the notification also shall contain the following information to the extent such information is known and readily available to the user: an identification of the hazardous constituents contained in the wastes, an estimation of the mass and concentration of such constituents in the wastestream discharged during that calendar month, and an estimation of the mass of constituents in the wastestream expected to be discharged during the following twelve (12) months. All notifications must take place no later than one hundred and eighty (180) days after the discharge commences. Any notification under this paragraph need be submitted only once for each hazardous waste discharged. However, notification of changed conditions must be submitted under Section 24.1205 of this ordinance. The notification requirement in this Section does not apply to pollutants already reported by users subject to categorical pretreatment standards under the self-monitoring requirements of Section 24.1201, 24.1203, and 24.1204 of this ordinance.

(2) Dischargers are exempt from the requirements of paragraph (1), above, during a calendar month in which they discharge no more than fifteen (15) kilograms of hazardous wastes, unless the wastes are acute hazardous wastes as specified in 40 CF 261.30(d) and 261.33(e). Discharge of more than fifteen (15) kilogram of nonacute hazardous wastes in a calendar month, or of any quantity of acute hazardous wastes as specified in 40 CFR 261.30(d) and 261.33(3), requires a one-time notification. Subsequent months during which the user discharges more than such quantities of any hazardous waste do not require additional notification.

(3) In the case of any new regulations under Section 3001 of RCRA identifying additional characteristics of hazardous waste or listing any additional substance as a hazardous waste, the user must notify the superintendent, the EPA Regional Waste Management Waste Division Director, and state hazardous waste authorities of the discharge of such substances within ninety (90) days of the effective date of such regulations.

(4) In the case of any notification made under this Section, the user shall certify that it has a program in place to reduce the volume and toxicity of hazardous wastes generated to the degree it has determined to be economically practical.

(5) This provision does not create a right to discharge any substance not otherwise permitted to be discharged by this ordinance, a permit issued thereunder, or any applicable federal or state law.

24.1210 <u>Analytical requirements</u> --- All pollutant analyses, including sampling techniques, to be submitted as part of a wastewater discharge permit application or report shall be performed in accordance with the techniques prescribed in 40 CFR part 136, unless otherwise specified in an

applicable categorical pretreatment standard. If 40 CFR part 136 does not contain sampling or analytical techniques for the pollutant in question, sampling and analyses must be performed in accordance with procedures approved by EPA.

24.1211 <u>Sample collection</u> ---

(1) Except as indicated in Section (2), below, the user must collect wastewater samples using flow proportional composite collection techniques. In the event flow proportional sampling is infeasible, the superintendent may authorize the use of time proportional sampling or a minimum of four (4) grab samples where the user demonstrates that this will provide a representative sample of the effluent being discharged. In addition, grab samples may be required to show compliance with instantaneous discharge limits.

(2) Samples for oil and grease, temperature, pH, cyanide, phenols, sulfides, and volatile organic compounds must be obtained using grab collection techniques.

24.1212 <u>Timing</u> --- Written reports will be deemed to have been submitted on the date postmarked. For reports which are not mailed, postage prepaid, into a mail facility serviced by the United States Postal Service, the date of receipt of the report shall govern.

24.1213 <u>Record keeping</u> --- Users subject to the reporting requirements of this ordinance shall retain, and make available for inspection and copying, all records of information obtained pursuant to and monitoring activities required by this ordinance and any additional records of information obtained pursuant to monitoring activities undertaken by the user independent of such requirements. Records shall include the date, exact place, method, and time of sampling, and the name of the person(s) taking the samples; the dates analyses were performed; who performed the analyses; the analytical techniques or methods used; and the results of such analyses. These records shall remain available for a period of at least three (3) years. This period shall be automatically extended for the duration of any litigation concerning the user or the city, or where the user has been specifically notified of a longer retention period by the superintendent.

24.1214 <u>Confidential information</u> --- Information and data on a user obtained from reports, surveys, wastewater discharge permit applications, wastewater discharge permits, and monitoring programs, and from the superintendent's inspection and sampling activities, shall be available to the public without restriction, unless the user specifically requests, and is able to demonstrate to the satisfaction of the superintendent, that the release of such information would divulge information, processes, or methods of production entitled to protection as trade secrets under applicable state law. Any such request must be asserted at the time of submission of the information or data. When requested and demonstrated by the user furnishing a report that such information should be held confidential, the portions of a report which might disclose trade secrets or secret processes shall not be made available for inspection by the public, but shall be made available immediately upon request to government agencies for uses related to the NPDES program or pretreatment program, and in enforcement proceedings involving the person furnishing the report. Wastewater constituents and characteristics and other “effluent data" as defined by 40 CFR 2.302 will no be recognized as confidential information and will be available to the public without restriction.

24.1215 <u>Publication of users in significant noncompliance</u> --- The superintendent shall publish annually, in the largest daily newspaper published in the municipality where the POTW is located, a list of the users which, during the previous twelve (12) months, were in significant noncompliance with applicable pretreatment standards and requirements. The term significant noncompliance shall mean:

(1) Chronic violations of wastewater discharge limits, defined here as those in which sixty-six percent (66%) or more of wastewater measurements taken during a six (6) month period exceed daily maximum limit or average limit for the same pollutant parameter by any amount;

(2) Technical review criteria (TRC) violations, defined here as those in which thirty-three percent (33%) or more of wastewater measurements taken for each pollutant parameter during a six (6) month period equals or exceeds the product of the daily maximum limit or the average limit multiplied by the applicable criteria (1.4 for BOD, TSS, fats, oil, and grease, and 1.2 for all other pollutants except pH);

(3) Any other discharge violation that the superintendent believes has caused, alone, or in combination with other discharges, interference or pass through, including endangering the health of POTW personnel or the general public;

(4) Any discharge of pollutants that has caused imminent endangerment to the public or to the environment, or has resulted in the superintendent's exercise of its emergency authority to halt or prevent such a discharge;

(5) Failure to meet, within ninety (90) days of the scheduled date, a compliance schedule milestone contained in a wastewater discharge permit or enforcement order for starting construction, completing construction, or attaining final compliance;

(6) Failure to provide within thirty (30) days after due date, any required reports, including baseline monitoring reports, reports on compliance with categorical pretreatment standard deadlines, periodic self-monitoring reports, and reports on compliance with compliance schedules;

(7) Failure to accurately report noncompliance; or

(8) Any other violations(s) which the superintendent determines will adversely affect the operation or implementation of the local pretreatment program.

ARTICLE XIII COMPLIANCE MONITORING

Section 24.1301 <u>Right of entry - inspection and sampling</u> --- The superintendent shall have the right to enter the premises of any user to determine whether the user is complying with all requirements of this ordinance and any wastewater discharge permit or order issued hereunder. Users shall allow the superintendent ready access to all parts of the premises for the purposes of inspection, sampling, records examination and copying, and the performance of any additional duties.

(1) Where a user has security measures in force which require proper identification and clearance before entry into its premises, the user shall make necessary arrangements with its security guards so that, upon presentation of suitable identification, the superintendent will be permitted to enter without delay for the purposes of performing specific responsibilities.

(2) The superintendent shall have the might to set up on the user's property, or require installation of, such devices as are necessary to conduct sampling and/or metering of the user's operations.

(3) The superintendent may require the user to install monitoring equipment as necessary. The facility's sampling and monitoring equipment shall be maintained at all times in a safe and proper operating condition by the user at its own expense. All devices used to measure wastewater flow and quality shall be calibrated semi-annually to ensure their accuracy.

(4) Any temporary or permanent obstruction to safe and easy access to the facility to be inspected and/or sampled shall be promptly removed by the user at the written or verbal request of the superintendent and shall not be replaced. The costs of clearing such access shall be born by the user.

(5) Unreasonable delays in allowing the superintendent access to the user's premises shall be a violation of this ordinance.

24.1302 <u>Search warrants</u> --- If the superintendent has been refused access to a building, structure, or property or any part thereof, and is able to demonstrate probable cause to believe that there may be a violation of this ordinance, or that there is a need to inspect and/or sample as part of a routine inspection and sampling program of the city designed to verify compliance with this ordinance or any permit or order issued hereunder, or to protect the overall public health, safety and welfare of the community, then the superintendent may seek issuance of a search warrant from the Circuit Court of Adams County or other court having jurisdiction.

ARTICLE XIV ADMINISTRATIVE ENFORCEMENT REMEDIES

Section 24.1401 <u>Notification of violation</u> -- When the superintendent finds that a user has violated, or continues to violate, any provision of this ordinance, a wastewater discharge permit or order issued hereunder, or any other pretreatment standard or requirement, the superintendent may serve upon that user a written notice of violation. Within thirty (30) days of the receipt of this notice, an explanation of the violation and plan for the satisfactory correction and prevention thereof, to include specific required actions, shall be submitted by the user to the superintendent. Submission of this plan in no way relieves the user of liability for any violations occurring before or after receipt of the notice of violation. Nothing in this Section shall limit the authority of the superintendent to take any action, including emergency actions or any other enforcement action, without first issuing a notice of violation.

24.1402 <u>Consent orders</u> --- The superintendent may enter into consent orders, assurances of voluntary compliance, or other similar documents establishing an agreement with any user responsible for noncompliance. Such documents will include specific action to be taken by the user to correct the noncompliance within a time period specified by the document. Such documents shall have the same force and effect as the administrative orders issued pursuant to Section 24.1404 and 24.1405 of this ordinance and shall be judicially enforceable.

24.1403 <u>Show cause hearing</u> --- The superintendent may order a user which has violated, or continues to violate, any provision of this ordinance, a wastewater discharge permit or order issued hereunder, or any other pretreatment standard or requirement, to appear before the superintendent and show cause why the proposed enforcement action should not be taken. Notice shall be served on the user specifying the time and place for the meeting, the proposed enforcement action, the reasons for such action, and a request that the user show cause why the proposed enforcement action should not be taken. The notice of the meeting shall be served personally or by registered or certified mail (return receipt requested) at least ten (10) days prior to the hearing. Such notice may be served on any authorized representative of the user. A show cause hearing shall not be a bar against, or prerequisite for, taking any other action against the user.

24.1404 <u>Compliance orders</u> --- When the superintendent finds that a user has violated, or continues to violate, any provision of this ordinance, a wastewater discharge permit or order issued hereunder, or any other pretreatment standard or requirement, the superintendent may issue an order to the user responsible for the discharge directing that the user come into compliance within a specified time. If the user does not come into compliance within the time provided, sewer service may be discontinued unless adequate treatment facilities, devices, or other related appurtenances are installed and properly operated. Compliance orders also may contain other requirements to address the noncompliance, including additional self-monitoring and management practices designed to minimize the amount of pollutants discharged to the sewer. A compliance order may not extend the deadline for compliance established for a pretreatment standard or requirement, nor does a compliance order relieve the user of liability for any violation, including any continuing violation. Issuance of a compliance order shall not be a bar against, or a prerequisite for, taking any other action against the user.

24.1405 <u>Cease and desist orders</u> --- When the superintendent finds that a user has violated, or continues to violate, any provision of this ordinance, a wastewater discharge permit or order issued hereunder, or any other pretreatment standard or requirement, or that the user's past violations are likely to recur, the superintendent may issue an order to the user directing it to cease and desist all such violations and directing the user to:

(1) Immediately comply with all requirements; and

(2) Take such appropriate remedial or preventive action as may be needed to properly address a continuing or threatened violation, including halting operations and/or terminating the discharge.

Issuance of a cease and desist order shall not be a bar against, or a prerequisite for, taking any other action against the user.

24.1406 <u>Emergency suspension</u> --- The superintendent may immediately suspend a user's discharge, after informal notice to the user, whenever such suspension is necessary to stop an actual or threatened discharge which reasonably appears to present or cause an imminent or substantial endangerment to the health or welfare of persons. The superintendent may also immediately suspend a user's discharge, after notice and opportunity to respond, that threatens to interfere with the operation of the POTW, or which presents or may present, an endangerment to the environment.

(1) Any user notified of a suspension of its discharge shall immediately stop or eliminate its contribution. In the event of a user's failure to immediately comply voluntarily with the suspension order, the superintendent may take such steps as deemed necessary, including immediate severance of the sewer connection, to prevent or minimize danger to the POTW, its receiving stream, or endangerment to any individuals. The superintendent may allow the user to recommence its discharge when the user has demonstrated to the satisfaction of the superintendent that the period of endangerment has passed, unless the termination proceedings in Section 24.1407 of this ordinance are initiated against the user.

(2) A user that is responsible, in whole or in part, for any discharge presenting imminent endangerment shall submit a detailed written statement, describing the causes of the harmful contribution and the measures taken to prevent any future occurrence, to the superintendent prior to the date of any show cause or termination hearing under Section 24.1403 or 24.1407 of this ordinance.

Nothing in this section shall be interpreted as requiring a hearing prior to any emergency suspension under this Section.

24.1407 <u>Termination of discharge</u> --- In addition to the provisions in Section 24.1106 of this ordinance, any user who violates the following conditions is subject to discharges termination:

(1) Violation of wastewater discharge permit conditions;

(2) Failure to accurately report the wastewater constituents and characteristics of its discharge;

(3) Failure to report significant changes in operations or wastewater volume, constituents, and characteristics prior to discharge;

(4) Refusal of reasonable access to the user's premises for the purpose of inspection, monitoring, or sampling; or

(5) Violation of the pretreatment standards in Article 9 of this ordinance.

Such user will be notified of the proposed termination of its discharge and be offered an opportunity to show cause under Section 24.1403 of this ordinance why the proposed action should not be taken. Exercise of this option by the superintendent shall not be a bar to, or a prerequisite for, taking any other action against the user.

ARTICLE XV JUDICIAL ENFORCEMENT REMEDIES

Section 24.1501 <u>Injunctive relief</u> --- When the superintendent finds that a user has violated, or continues to violate, any provision of this ordinance, a wastewater discharge permit, or order issued hereunder, or any other pretreatment standard or requirement, the superintendent may petition the Circuit Court of Adams County through the city's attorney for the issuance of a temporary or permanent injunction, as appropriate, which restrains or compels the specific performance of the wastewater discharge permit, order, or other requirement imposed by this ordinance on activities of the user. The superintendent may also seek other action as is appropriate for legal and/or equitable relief, including a requirement for the user to conduct environmental remediation. A petition for injunctive relief shall not be a bar against, or a pre-requisite for, taking any other action against a user.

24.1502 <u>Penalties</u> ---

(1) **Generally**: Except as otherwise provided, any person, firm, or corporation who violates any provision of this Chapter, shall in addition to such other relief as the law may afford, be punishable as set forth in Chapter 32 of this Code.

(2) **Industrial user violations**: Any "industrial user" (as herein defined) who has violated, or continues to violate any of the provisions of Articles VIII through XIV, inclusive, of this Code shall be liable of a business offense and upon conviction shall be fined not more than one thousand dollars ($1,000.00) per violation, per day. In the case of a monthly or other long-term average discharge limit, penalties shall accrue for each day during the period of the violation.

(3) (a) In addition to the above, and in addition to such other relief as the law may afford, upon any such conviction as provided above, such person, firm, or corporation shall be liable for and the city may recover reasonable attorney's fees, court costs, and other expenses associated with enforcement activities, including sampling and monitoring expenses, and the cost of any actual damages incurred by the city.

(b) In determining the amount of the fine and above liability, the court may take into account all relevant circumstances, including, but not limited to, the extent of harm caused by the violation, the magnitude and duration of the violation, any economic benefit gained through the user's violation, corrective actions by the user, the compliance history of the user, and any other factor as justice requires.

(c) Filing an action or prosecution under this section shall not be bar against, or a prerequisite for, taking any other action against a user.

24.1503 <u>Criminal prosecution</u> ---

(1) Any person who willfully or negligently violates any of the provisions of Article VIII through XIV, inclusive, of this Code shall, upon conviction, be guilty of a misdemeanor punishable by a fine of not more than one thousand dollars ($1,000.00) per violation, per day, or imprisonment for not more than six (6) months or both.

(2) Any person who willfully or negligently introduces any substance into the POTW which causes personal injury or property damage shall, upon conviction, be guilty of misdemeanor punishable by a fine not more than one thousand dollars ($1,000.00) or

imprisonment for not more than six (6) months or both. This penalty shall be in addition to any other cause of action for personal injury or property damage available under state law.

(3) Any person who knowingly makes any false statements, representations, or certifications in any application, record, report, plan, or other documentation filed, or required to be maintained, pursuant to this ordinance, wastewater discharge permit, or order issued hereunder, or who falsifies, tampers with, or knowingly renders inaccurate any monitoring device or method required under this ordinance shall, upon conviction be guilty of a misdemeanor, punishable by a fine of not more than one thousand dollars ($1,000.00) per violation, per day, or imprisonment for not more than six months, or both.

24.1504 <u>Remedies nonexclusive</u> --- The remedies provided for in this ordinance are not exclusive. The superintendent may take any, all, or any combination of these actions against a noncompliant user. Enforcement of pretreatment violations will generally be in accordance with the city's enforcement response plan. However, the superintendent may take other action against any user when the circumstances warrant. Further, the superintendent is empowered to take more than one enforcement action against any noncompliant user.

ARTICLE XVI SUPPLEMENTAL ENFORCEMENT ACTION

Section 24.1601 <u>Liability insurance</u> --- The superintendent may decline to issue or reissue a wastewater discharge permit to any user who has failed to comply with any provision of this ordinance, a previous wastewater discharge permit, or order issued hereunder, or any other pretreatment standard or requirement, unless the user first submits proof that it has obtained financial assurances sufficient to restore or repair damage to the POTW caused by its discharge.

24.1602 <u>Water supply severance</u> --- Whenever a user has violated or continues to violate any provision of this ordinance, a wastewater discharge permit, or order issued hereunder, or any other pretreatment standard or requirement water service to the user may be severed. Service will only recommence, at the user's expense, after it has satisfactorily demonstrated its ability to comply.

26.1603 <u>Public nuisances</u> --- A violation of any provision of this ordinance, a wastewater discharge permit, or order issued hereunder, or any other pretreatment standard or requirement is hereby declared a public nuisance and shall be corrected or abated as directed by the superintendent. Any person(s) creating a public nuisance shall be subject to the provisions of Article I of Chapter 21 of the Municipal Code governing such nuisances, including reimbursing the city for any costs incurred in removing, abating, or remedying said nuisance.

ARTICLE XVII AFFIRMATIVE DEFENSES TO DISCHARGE VIOLATIONS

Section 24.1701 Upset ---

(1) For the purposes of this section, upset" means exceptional incident in which there is unintentional and temporary noncompliance with categorical pretreatment standards because of factors beyond the reasonable control of the user. An upset does not include noncompliance to the extent caused by operational error, improperly designed treatment facilities, inadequate treatment facilities, lack of preventative maintenance, or careless or improper operation.

(2) An upset shall constitute an affirmative defense to an action brought for noncompliance with categorical pretreatment standards if the requirements of paragraph (3), below are met.

(3) A user who wishes to establish the affirmative defense of upset shall demonstrate, through properly signed, contemporaneous operating logs, or other relevant evidence that:

(a) An upset occurred and the user can identify the cause(s) of the upset;

(b) The facility was at the time being operated in a prudent and workman-like manner and in compliance with applicable operation and maintenance procedures; and

(c) The user has submitted orally the following information to the superintendent within twenty-four (24) hours of becoming aware of the upset and the oral statements are confirmed in writing within five (5) days:

1.) A description of the indirect discharge and cause of noncompliance;

2.) The period of noncompliance, including exact dates and time or, if not corrected, the anticipated time the noncompliance is expected to continue; and

3.) Steps being taken and/or planned to reduce, eliminate, and prevent recurrence of the non-compliance.

(4) In any enforcement proceedings, the user seeking to establish the occurrence of an upset shall have the burden of proof.

(5) Users will have the opportunity for a judicial determination on any claim of upset only in an enforcement action brought for noncompliance with categorical pretreatment standards.

(6) Users shall control production of all discharges to the extent necessary to maintain compliance with categorical pretreatment standards upon reduction, loss, or failure of its treatment facility until the facility is restored or an alternative method of treatment is provided. This requirement applies in the situation where, among other things, the primary source of power of the treatment facility is reduced, lost, or fails.

24.1702 Prohibited discharge standards ---- A user shall have an affirmative defense to an enforcement action brought against it for noncompliance with the general prohibitions in Section 24.802(1) of this ordinance or the specific prohibitions in Section 24.802(2)(c) through (q) of this ordinance if it can prove that it did not know, or have reason to know, that its discharge, along or in conjunction with discharges from other sources, would cause pass through or interference and that either:

(1) A local limit exists for each pollutant discharged and the user was in compliance with each limit directly prior to, and during, the pass through or interference; or

(2) No local limit exists, but the discharge did not change substantially in nature or constituents from the user's prior discharge when the city was regularly in compliance with its

NPDES permit, and in the case of interference, was in compliance with applicable sludge use or disposal requirements.

24.1703 <u>Bypass</u> ---

(1) For the purposes of this Section:

(a) "Bypass" means the intentional diversion of wastestreams from any portion of a user's treatment facility.

(b) "Severe property damage" means substantial physical damage to property, damage to the treatment facilities which causes them to become inoperable, or substantial and permanent loss or natural resources which can reasonably be erected to occur in the absence of a bypass. Severe property damage does not mean economic loss caused by delays in production.

(2) A user may allow any bypass to occur which does not cause pretreatment standards or requirements to be violated, but only if it also is for essential maintenance to assure efficient operation. These bypasses are not subject to the provision of paragraphs (3) and (4) of this Section.

(3) (a) If a user knows in advance of the need for a bypass, it shall submit prior notice to the superintendent, at least ten (10) days before the date of the bypass, if possible.

(b) A user shall submit oral notice to the superintendent of an unanticipated bypass that exceeds applicable pretreatment standards within twenty-four (24) hours from the time it becomes aware of the bypass. A written submission shall also be provided within five (5) days of the time the user becomes aware of the bypass. The written submission shall contain a description of the bypass and its cause; the duration of the bypass, including exact dates and times, and, if the bypass has not been corrected, the anticipated time it is expected to continue; and steps taken or planned to reduce, eliminate, and prevent reoccurrence of the bypass. The superintendent may waive the written report on a case-by-case basis if the oral report has been received within twenty-four (24) hours.

(4) (a) Bypass is prohibited, and the superintendent may take an enforcement action against a user for a bypass, unless

1.) Bypass was unavoidable to prevent loss of life, personal injury, or severe property damage;

2.) There were no feasible alternatives to the bypass, such as the use of auxiliary treatment facilities, retention of untreated wastes, or maintenance during normal periods of equipment downtime. This condition is not satisfied if adequate back-up equipment should have been installed in the exercise of reasonable engineering judgment to prevent a bypass which occurred during normal periods of equipment downtime or preventive maintenance; and

3.) The user submitted notices as required under paragraph (3) of this Section.

(b) The superintendent may approve, an anticipated bypass, after considering its adverse effects, if the superintendent determines that it will meet the three conditions listed in paragraph (4)(a) of this Section.

ARTICLE XVIII WASTEWATER SERVICE CHARGES

Section 24.1801 <u>Basis for wastewater service charges</u> --- The wastewater service charge for the use of and for service supplied by the wastewater facilities of the city shall consist of a basic user charge for operation and maintenance, replacement, reserve fund, and if applicable, a debt service charge.

The basic user charge shall be based on water usage as recorded by water meters and/or sewage meters for wastes having the following normal concentrations:

(l) A five (5) day. 20 degree centigrade (20 C) biochemical oxygen demand (BOD) of 200 mg/1.

(2) A suspended solids (SS) content of 250 mg /l.

A surcharge will be levied to all users whose waters exceed the normal concentrations for BOD (200 mg/1) and SS (250 mg/1). The surcharge will be based on water usage as recorded by water meters and/or sewage meters for all wastes which exceeds the 200 mg/1 and 250 mg/1 concentration for BOD and SS respectively. Section 24.1805 specifies the procedure to compute a surcharge.

The adequacy of the wastewater service charge shall be reviewed annually by certified public accountants. The wastewater service charge shall be revised periodically to reflect a change in debt service, operation and maintenance costs, replacement costs and reserve fund costs.

24.1802 <u>Measurement of flow</u> --- The volume of flow used for computing basic user charges and surcharges shall be the metered water consumption read to the lowest even increments of 100 cubic fee (1 unit).

(l) If the person discharging wastes into the public sewers procures any part, or all, of his water from sources other than the public waterworks system, all or a part of which is discharged into the public sewers, the person shall install and maintain, at his expense, water meters of a type approved by the superintendent for the purpose of determining the volume of water obtained from these other sources.

(2) Devices for measuring the volume of waste discharged may be required by the superintendent if these volumes cannot otherwise be determined from the metered water consumption records.

(3) Metering devices for determining the volume of waste shall be installed, owned, and maintained by the person. Following approval and installation, such meters may not be removed, unless service is cancelled, without the consent of the superintendent.

24.1803 <u>Basic user rate</u> --- There shall be and there is hereby established a basic user rate for the use of and for service supplied by the wastewater facilities of the city.

A basic user rate of $ 1.41 per 100 cubic feet.

All non-metered residential users of the wastewater facilities shall pay a minimum flat rate charge per quarter based on twenty (20) units of consumption.

In the event use or the wastewater facility is determined by the superintendent to be in excess of 20 units per quarter, the superintendent may require such flat rate user to install metering devices on the water supply or sewer main to measure the amount of service supplies.

24.1804 <u>Surcharge rate</u> --- The rates of surcharge for BOD and SS shall be as follows:

$.2193/lb of BOD in excess of 200 mg/1

$.2130/lb of SS in excess of 250 mg/1

24.1805 <u>Computation of surcharge</u> --- The concentration of wastes used for computing surcharges shall be established by waste sampling. Waste sampling shall be performed as often as may be deemed necessary by the superintendent and shall binding as a basis for surcharges.

24.1806 <u>Debt service charge</u> --- Users of the wastewater facilities located outside the corporate boundaries of the city shall be charged a debt service charge. Such charge shall be computed by multiplying the tax rate extended within the corporate boundaries for the payment of interest, principal and service charges on bonds outstanding on the wastewater facilities, by the assessed evaluation of property served, including vacant lands adjacent thereto. The debt service charge shall be in addition to other wastewater service charges and shall be billed quarterly or monthly on the regular wastewater service charge billing.

24.1807 <u>Pretreatment program charge</u> --- It is the purpose of this Section to provide for the recovery of costs from users of the city's wastewater disposal system for the implementation of the pretreatment program. The applicable charges or fees shall be set forth in the city's schedule of charges and fees. The city may adopt charges and fees which may include:

(1) Fees for reimbursement of costs of setting up and operating the city's pretreatment program;

(2) Fees for monitoring, inspections and surveillance procedures;

(3) Fees for reviewing accidental discharge procedures and construction;

(4) Fees for permit applications;

(5) Fees for filing appeals;

(6) Fees for consistent removal by the city of pollutants otherwise subject to federal pretreatment standards;

(7) Other fees as the city may deem necessary to carry out the requirements contained herein.

These fees relate solely to the matters covered by this ordinance and are separate from all other fees chargeable by the city.

ARTICLE XIX GENERAL PROVISIONS

Section 24.1901 <u>Bills</u> --- Said rates or charges, for service including user charges, surcharges and debt service charge, where applicable, shall be payable quarterly.

The owner of the premises, the occupant thereof and the user of the service shall be jointly and severally liable to pay for the service to such premises and the service is furnished to the premises by the city only upon the condition that the owner of the premises, occupant and user of the services are jointly and severally liable therefore to the city.

Bills for sewer service shall be sent out by the Water Department.

All sewer bills are due and payable ten (10) days after being sent out.

24.1902 <u>Delinquent bills</u> --- If the charges for such services are not paid within ten (10) days after the rendition of the bill for such services, such services and/or water services may be discontinued without further notice and after thirty (30) days shall be discontinued and shall not be reinstated until all claims are settled.

24.1903 <u>Lien-notice of delinquency</u> --- Whenever a bill for sewer service remains unpaid for ten (10) days after it has been rendered, the city may file with the County Recorder of Deeds a statement of lien claim. This statement shall contain the legal description of the premises served, the amount of the unpaid bill, and a notice that the city claims a lien for this amount as well as for all charges subsequent to the period covered by the bill.

If the user whose bill is unpaid is not the owner of the premises and the city has notice of this, notice shall be mailed to the owner of the premises if his address be known to the city, whenever such bill remains unpaid for the period of forty-five (45) days.

The failure of the city to record such lien or to mail such notice or the failure of the owner to receive such notice shall not affect the right to foreclose the lien for unpaid bills as mentioned in the foregoing Section.

24.1904 <u>Foreclosure of lien</u> --- Property subject to a lien for unpaid charges shall be sold for non-payment if the same, and the proceeds of the sale shall be applied to pay he charges, after deducting costs, as is the case in the foreclosure of statutory liens. Such foreclosure shall be by bill-in-equity in the name of the City of Quincy. The City Attorney is hereby authorized and directed to institute such proceedings in the name of the city in any court having jurisdiction over such matters against any property for which the bill has remained unpaid forty-five (45) days.

24.1905 <u>Revenues</u> --- All revenues and monies derived from the operation of the sewerage system shall be deposited in the Utilities Fund. All such revenues and monies shall a held separate and apart from all other funds of the city.

24.1906 <u>Accounts</u> --- The Sanitation Committee shall establish a proper system of accounts and shall keep proper books, records, and accounts in which complete and correct entries shall be made of all transactions relative to the sewerage system and at regular annual intervals it shall cause to be made an audit by an independent auditing concern of the books to show the receipts and disbursements of the sewerage system.

In addition to the customary operating statements, the annual audit report shall also reflect the revenues and operating expenses of the wastewater facilities, including a replacement cost, to indicate that the sewer service charges do in fact meet these regulations. In this regard, the financial information to be shown in the audit report shall include the following:

(1) Flow data showing total gallons received at the wastewater plant for the current fiscal year.

(2) Billing data to show total number of gallons billed.

(3) Debt service for the next succeeding fiscal year.

(4) Number of users connected to the system.

(5) Number of non-metered users.

(6) A list of users discharging non-domestic wastes (industrial users) and volume of waste discharged.

24.1907 **Notice of rates** --- A copy of this ordinance properly certified by the City Clerk shall be filed in the office of the Recorder of Deeds of Adams County and shall a deemed notice to all owners of real estate of the charges of the sewerage system of said city on their properties.

24.1908 **Access to records** --- The Illinois Environmental Protection Agency or its authorized representative shall have access to any books, documents, papers, and records of the city which are applicable to the city system of user charges for the purpose of making audit, examination, excerpts and transcriptions thereof to insure compliance with the terms of the special and general conditions to any State grant.

24.1909 **Effective date of rates** --- The rates and service charges established for user charges in Section 24.1803 through 24.1806 shall be effective as of the date established by ordinance by the City Council.

24.1910 **Validity** --- The provisions of this ordinance shall be deemed separable and if any section, paragraph, clause or provision of this Article shall be held to be invalid or unenforceable for any reason, the invalidity or unenforceability of such section, paragraph, clause or provision shall not affect any of the remaining provisions of this Article.

CHAPTER 25

WATER

ARTICLE I	**GENERAL PROVISIONS**
ARTICLE II	**SERVICE**
ARTICLE III	**RATES**
ARTICLE IV	**PLUMBERS**
ARTICLE V	**CROSS CONNECTION CONTROL**

ARTICLE I GENERAL PROVISIONS

Section 25.101 <u>Definitions</u> --- The following definitions are prescribed for purposes of this Chapter, except as the context may otherwise require:

(1) **Customer**: Any person, firm or corporation supplied water.

(2) **Customer service**: That portion of the service pipe between the curb stop, usually located between the curb line and the property line, and the structures on the premises to a supplied.

(3) **Main**: The supply pipe, owned and maintained by the Water Department, to which water service connections are attached to supply water to one or more customers.

(4) **Meter**: A mechanical device which measures the quantity of water supplied to the customer.

(5) **Plumber**: Any person, firm or corporation licensed by the State of Illinois and bonded with the Water Committee to do work in connection with the municipal water system as a master plumber.

(6) **Premises**:

(a) A building under one roof owned or leased by one party and occupied as a residence, or used as a place for business, industrial or commercial purposes.

(b) A group or combination of buildings owned or leased by one party, occupied by one family, or one corporation or firm, or as a place of business, or for manufacturing or industrial purposes, or as a hospital or other public institution.

(c) One side of a double house having a vertical partition or wall.

(d) A building owned or leased by one party containing more than one apartment and having one entrance and using one hall in common.

(e) A building owned or leased by one party having a number of apartments, offices or lofts which are rented to tenants.

(f) A public building such as a town hall, schoolhouse, community college, fire station or library.

(g) A single lot or park, or playground.

(h) Each housing or building in a row having party walls.

(7) **Private fire service protection**: A connection with appurtenances, used only to conduct water from the main to the customer's private fire protection system.

(8) **Superintendent**: The Superintendent of the City of Quincy Water Department, or his or her designate, having general authority to supervise the operation and maintenance of the water filtration plant, the distribution system, the collection of water charges, and related duties.

(9) **Temporary service**: A service used to supply water to customers for temporary purposes and housing without permanent foundations.

(10) **Water Committee**: A joint committee of the City Council and the Public Works Commission.

(11) **Water Department**: A department of the Public Works Commission acting through its duly appointed Water Committee, superintendent and other duly authorized employees and agents.

(12) **Water service connection**: A pipe with appurtenances, used to conduct water from the main to and including the curb stop and the curb box, usually located at a point between the curb line and the property line.

25.102 General authority --- The general authority for the administration, supervision and operation of the City of Quincy Water Department is vested in the Superintendent of water, (referred to in this Article as "superintendent"), Water Committee and the Department of Public Works provided for in Chapter 7 of this Code.

25.103 Rules and regulations --- The Superintendent of Water, Water Committee and the Department of Public Works are hereby authorized and empowered to make, enact and enforce all needful rules and regulations for the operations of the Water department consistent with the provisions of this Code and the actions of the City council. In the event of conflict, the rules and regulations of the department of Public Works shall take precedence over those of the Water committee and superintendent; and those of the Water Committee shall take precedence over those of the superintendent. A violation of any such rules and regulations shall be the same as a violation of the provisions of this Chapter. All water service shall be subject to such rules and regulations in addition to these and other applicable provisions. Such rules and regulations may include, among other area, the following:

Applications for service and correlative credit-establishment rules;
Water connections and meter installations;
Special outside meter charges;
Charges for testing meters and refunds if a meter is found inaccurate to the extent of more than two percent (2%);
Credit and deposit requirements for existing customers who default in payments or violate service rules;
Estimated bill practices;
Payment periods and late-payment charges
Prolonged unbilled service and related issues such as tampering, billing error and make-up billing;
Deferred payment programs for past due accounts;
Budget payment plans;
Discontinuance of service, including the related issues of form and character of notice, conditions permitting discontinuance, conditions prohibiting discontinuance, and discontinuance to master-metered, multi-family buildings;
Service reconnection charges;
Disputed resolution procedures; and,
Manual meter reading service charge (where automatic meter reading service has been offered, made available and refused by the customer).

25.104 Revenues --- All revenues and moneys derived from the operations of the Water Department shall be deposited in the Utilities Fund. Such revenues and moneys shall be held separate and apart from all other funds of the city.

ARTICLE II SERVICE

Section 25.201 <u>Generally</u> --- The City of Quincy, its various departments and its agents and employees do not guarantee the furnishing of water for any purposes including, but not limited to drinking, fire protection, steam boilers, and hot water systems, or the quality of water furnished. Notice will be given whenever practicable prior to shutting off water, but consumers are cautioned that owing to unavoidable accidents or emergencies, their water supply may be shut off at any time. The Water Department assumes no liability for damages to boilers or hot water systems or loss to convenience which this may entail. Likewise, the Water Department assumes no responsibility for loss of water or damage to premises which are caused by turning on water which has been off or by breaks in that part of the pipe and fixtures which are owned by the consumer and are to be kept in repair by him. The City of Quincy, its various departments and its agents and employees shall not be liable for a failure to provide sufficient or suitable water for any purpose. This shall include, but not be limited to, turbid water which may be occasioned by cleaning pipes, reservoirs, standpipes, or the opening or closing of any gates or hydrants, or a break, leak or defect in services.

25.202 <u>Fluoridation of water</u> --- In order to protect the dental health of its citizens, especially children, the Superintendent of Water shall provide for the addition of fluoride to public water supplies.

25.203 <u>Application for water service</u> ---

(1) **Generally**: The rules and regulations adopted pursuant to this Chapter shall govern applications for service, provided, however, that new service outside the corporate limits of the City of Quincy shall not be extended unless a petition is filed to immediately annex such premises and adjoining property if contiguous or a petition, annexation covenant or other appropriate document or documents are duly executed obligating any present or future owners of the property to annex or allow the annexation of such premises and adjoining property to the City of Quincy once it shall become contiguous.

(2) **Non-contiguous lands**: Upon request for annexation by the owner of land not contiguous to the corporate boundaries of the City of Quincy but whose land is contiguous to land under one ownership being served by city water or sewer, the owner of each tract or tracts of land separating such land from the city shall join the land owner desiring the land annexation in a petition for annexation to the City of Quincy and to the Quincy Park District upon payment of all costs of annexation by the land owner originally requesting annexation. Failure of such intervening landowner or landowner to so join in such petition for annexation shall be deemed sufficient cause to sever the city water and sewer connections to such land. The provision of water or sewer services outside the corporate limits of the City of Quincy shall be subject to this condition.

25.204 <u>Discontinuance of water service</u> --- The city reserves the right to discontinue water service for reasonable cause, provided that prior to notice of at least twenty-four (24) hours shall be given if practical. Such reasonable cause shall include, but not be limited to the following:

(1) **Credit**: For failure of the customer to establish credit, or for nonpayment of a delinquent bill owed to the Water Department for the same class of service furnished to the customer at the same or another location.

(2) **Waste**: For willful or indifferent waste of water due to any cause.

(3) **Injury**: For failure to protect from injury or damage any meter of service connection, or for failure to maintain a customer's service pipe of fixtures on the property of the customer in a condition satisfactory to the Water Department. Meter damage -- the consumer shall be liable for any injury to the water meter on his premises occasioned by lack of ordinary care on his part and any meter requiring repairs due to damage from freezing or violence or from heat shall be repaired by the Water Department at the consumer's expense. The Water Department reserves the right to cancel and discontinue water service to consumers who refuse or neglect to pay such repair bills.

(4) **Tampering**: For molesting or tampering by the customer, or other persons with the knowledge of the customer, to any meter, connection, service pipe, curb stop, seal or any other appliance of the Water Department controlling or regulating the customer's supply.

(5) **Access**: For failure to provide the Water Department's employees free and reasonable access to the premises supplied, or for obstructing the way of ingress to the service pipes, fixtures, meters or other appliances, controlling or regulating the customer's water supply.

(6) **Vacancy**: In case of vacancy of the premises.

(7) **Annexation**: For failure to honor an annexation obligation relative to the premises or property whether executed by the customer or a predecessor in title, or failing to annex pursuant to Section 25.203(2).

(8) **Selling**: For selling or giving away water, or granting privileges to any one to use water not specifically included in the accepted application.

(9) **Cross-connection**: If the owner or occupant of the premises for which a cross-connection has been discovered fails or refuses to break the connection, the service shall be discontinued by making an actual break in the service of the pipe until the cross-connection has been properly broken or protected, the entire cost of which shall be that of the customer.

25.205 Fire protection services ---

(1) **Classes for private fire protection for commercial and industrial use**: There shall be recognized three classes of private fire protection for commercial and industrial use. First, those services with sprinkler heads or fire hydrants with no meter. Second, fire protection services through a detector check meter, so arranged that there is to be no consumption from the fire lines except in cases of fire and/or for necessary testing and inspection. Third, fire protection services through FM-CT fire meter, so arranged that the regular water consumption is taken from the fire lines.

(2) **Services of the first class**: These services may be continued on the present basis only at the option of the Water Department. Abuse of the private fire protection privileges through appropriation of water for other purposes or failure to maintain such services in a water-tight condition shall be deemed ample grounds for conversion to one of the other classes.

(3) **Services of the second class**: The customer is required to pay for the main tap, service connection, meter well, valves, and fitting that are attached to a detector check meter. The Department will furnish the customer with the detector check meter of the desired size. The detector check meter with valves and fittings attached would be picked up at the Water

Department by the customer. The customer will also be responsible for the maintenance, protection and upkeep of said service, well, valves and fittings, whether constructed by the water or a private contractor. Any materials used in this maintenance must conform to Water Department specifications.

(4) **Services of the third class**: The customer is required to pay for the meter well, valves and fittings that are attached to an FM meter, and in some cases the main tap and service connection. The Water Department will furnish the customer with the FM-CT meter with a compound bypass meter. The FM meter and bypass with valves and fittings attached would be picked up at the Water Department by the customer. The customer will also be responsible for the maintenance, protection and upkeep of said meter well, valves and fitting whether constructed by the Water Department or a private contractor. Any materials used in this maintenance must conform to Water Department specifications.

(5) **Private fire services**: The granting of a permit for private fire service is under the express condition that the City of Quincy and/or its Water Department shall not be considered or deemed in any manner to have undertaken to extinguish fire or to protect any person or property against loss or damage, not being insurers of persons or property, therefore, said city and its departments shall be free and exempt from any and all claims for damages on account of any injury to persons or property by reason of fire, water, failure to supply water or pressure or for any other cause whatsoever .

25.206 <u>Services for outside corporate limits</u>--- All hydrants shall be installed according to Water Department specifications. The consumer is required to pay for the main tap service connection, valves, fitting, pipe, fire hydrant and the installation of the same. In other words, the entire cost, material and labor is to be borne by the consumer. The customer or customers shall also be responsible for the cost of repair and maintenance of all hydrants

25.207 <u>Groundwater consumption and use</u> ---

(1) **Definitions**:

(a) Secondary and/or industrial users are hereby defined as the use of water for heating, cooling, industrial process waters, washing, boilers, metal rolling or pressing machines. Secondary use includes the watering of greens, golf courses, nursery plants and trees and for irrigation purposes;

(b) For purposes of enforcement of this Section, the use of groundwater for watering gardens in which produce intended for human consumption is grown is defined as a human use or consumption.

(2) **Existing groundwater wells of cisterns**: It shall be unlawful for any person, business or corporation to utilize an existing groundwater well or cistern (or other groundwater collection device) that collects groundwater within the corporate limits of the City of Quincy for the purpose of utilizing that water for human use or consumption, or for secondary or industrial use without first applying for a permit from the Superintendent of Water within sixty (60) days of the enactment of this ordinance.

(3) **New groundwater wells or cisterns**: It shall be unlawful for any person, business or corporation to drill any new groundwater well or to excavate and install any new cistern (or other groundwater collection device) within the corporate limits of the City of Quincy for the purpose of utilizing groundwater for human use or consumption. It shall be unlawful for any person,

business or corporation to drill any new groundwater well or to excavate and install any new cistern (or other groundwater collection device) within the corporate limits of the City of Quincy for the purpose of utilizing groundwater for secondary or industrial use without first obtaining a permit from the Superintendent of Water.

(4) **Annexation - permit required**: Any personal residence, business or corporation that is annexed to the City of Quincy after the effective date of this ordinance that utilizes a groundwater source for whatever purpose is required to apply for a permit from the Superintendent of Water within sixty (60) days after said property is annexed into the corporate limits.

(5) **Exemptions**: The following uses shall be exempt from the provisions of this section:

(a) The use of an existing cistern for only the collection and storage of surface waters and/or stormwater rain runoff;

(b) The installation of groundwater wells for use only in obtaining samples for environmental site monitoring purposes;

(c) The installation of any groundwater extraction well as required by any state or federal regulation or the purposes of an environmental cleanup or court mandated action for the protection of the environment, with the exception that the owner shall notify the Superintendent of Water of the well location

(d) The collection and subsequent secondary or industrial use of any spring water that naturally discharges from the ground to the surface without the aid of mechanical devices to extract said groundwater; and

(e) The collection of any groundwater around building foundations or below grade building walls for the purpose of controlling seep water into a residence or other building.

(6) **Registration**: The Superintendent of Water shall make available a registration form for this permit system that shall state, at a minimum, the street address and legal description of the property upon which the groundwater extraction system is located, the method by which the groundwater is to be extracted, the location of the groundwater extraction system on the property, relative to a property corner and the mailing address and the owner of record of the property. The registration form shall list the specific anticipated uses of the groundwater.

(7) **Groundwater source man**: The Superintendent of Water shall hereafter maintain a map of the City of Quincy recording the location of all registered groundwater sources.

(8) **Inspection**: The Superintendent of Water, his authorized representative and the City of Quincy Plumbing Inspector shall have the right to inspect the installation of each completed project to determine that no cross connections exist between the groundwater source and the City of Quincy potable water supply as per other applicable provisions of this ordinance. Failure to install and properly maintain any required cross connection control will result in the immediate shut-off of water service by the City of Quincy until such time as the appropriate controls are installed or repaired.

(9) **Discharge of groundwater to sewer system**: The discharge of a groundwater source from any business or corporation to the sewer system of the City of Quincy may also require that an NPDES permit from the Superintendent of Sanitation be obtained prior to any discharge.

(10) **Violations**: In addition to other remedies available at law or in equity, or under statute, violations of this Section may be punishable in the same manner as other petty offenses as set forth in Chapter 32 of this Code.

ARTICLE III RATES

Section 25.301 **Generally** --- The collection of charges for water service shall be under the general supervisory and administrative authority of the Superintendent of the City of Quincy Water Department.

25.302 **Billing** ---

(1) **Generally**: All charges are rates for water services shall be billed quarterly, The owner of the premises, the occupant thereof and the user are jointly and severally liable for the charges and rates for services to the premises. If any charges or rates shall be paid by a party, such party shall be subrogated to any rights of the city in connection with the same.

(2) **Due date**: All water bills shall be due on the date prescribed on the bill, provided such due date shall not be sooner than ten (10) days after the bill is sent.

25.303 **General consumption rates** --

(1) **Generally**: The following general water rates are hereby established:

Cubic Feet per Quarter	Rates or Cost per 100 Cubic Feet
First 400 or less	$11.65
Next 9,600	$ 1.53
Next 90,000	$ 1.39
Over 100,000	$ 0.76

(2) **Minimum rates**: In no case shall the gross bill of any customer (including eleemosynary institutions) be less than the amount stated below:

For a flat rate of	5/8 inch meter	$ 11.65 per quarter
	3/4 inch meter	$ 19.26 per quarter
	1 inch meter	$ 28.40 per quarter
	1 1/4 inch meter	$ 43.64 per quarter
	1 1/2 inch meter	$ 57.34 per quarter
	2 inch meter	$ 84.76 per quarter
	3 inch meter	$ 141.12 per quarter
	4 inch meter	$ 206.48 per quarter
	6 inch meter	$ 357.86 per quarter
	8 inch meter	$ 563.40 per quarter
	10 inch meter	$ 848.11 per quarter

(3) **Outside corporate limits**:

(a) **Residential**: Residential consumption rates outside the corporate limits shall be double the rates and minimum specified in subparagraph (1) and (2) of this Section.

(b) **Commercial**: Commercial and industrial consumption outside the corporate limits shall be one and one-quarter times the rates and minimums specified in subparagraph (1) and (2) of this Section if non-contiguous, and one and one-half times if contiguous.

(4) **Eleemosynary or charitable organizations**:

(a) **Generally**: Eleemosynary or charitable organizations located in the City of Quincy shall be charged $0.77 per 100 cubic feet of water consumed but shall be subject to the minimum rate established in subparagraph (2) of this Section.

(b) **Defined**: For purposes hereof, an organization will be deemed to be eleemosynary or charitable if the property receiving water services is exempt from real property taxation under the law of the State of Illinois and is approved as such by the City Council. The superintendent may require proof of continuing compliance with this provision and may withdraw approval relative to any organization failing to comply. An organization will no longer be considered eleemosynary or charitable even if approved by the City Council if the property is no longer exempt. Organizations which have been approved by the City Council are as follows:

Blessing Hospital	Greenmount Cemetery
Woodland Home	Woodland Cemetery
Cheerful Home	St. Boniface Cemetery
Quincy Park District	Calvary Cemetery
Board of Education, Community Unit School District No. 172	Valley of Peace Cemetery
Quincy University	Methodist Sunset Home
St Francis School	Good Samaritan Home
Chaddock	Quinsippi Nursing Home
St. Boniface School	Christian SheltiCenter
St. John School	Social Center Association
St. Mary's School	Y.M.C.A.
St. Peter's School	Y.W.C.A.
St. Dominic's School	Salvation Army
Quincy Notre Dame High	St. James School

(5) **Penalty**: A penalty of 10% will be added to the amount due if such amount is not paid on or prior to the 20th day following the original date set forth in the current bill.

25.304 <u>Fire protection rates</u> ---

(1) **First and second calls**: Rates for the first and second class of fire protection service will be charged based on the size of service. The following rates will apply:

Each two-inch service	$ 45.00 per annum
Each four-inch fire service	$125.00 per annum
Each six-inch fire service	$213.00 per annum
Each eight-inch fire service	$365.00 per annum
Each ten-inch fire service	$611.00 per annum

(2) **Third class**: Rates for the third class of fire protection service will be based on consumption with the following minimums applying:

Each two-inch FM meter	$ 66.17
Each three-inch FM meter	$110.20
Each four-inch FM meter	$161.44
Each six-inch FM meter	$280.25
Each eight-inch FM meter	$441.57
Each ten-inch FM meter	$665.02

(3) **Rates for residential outside corporate limits**:

(a) **Fire hydrant**: A rental of $75.00 per annum per 6" fire hydrant and $50.00 per annum per 2" fire hydrant will be assessed to one customer who is a resident of the subdivision to be served. Should the subdivision come into the city, the rental charge will be cancelled and the hydrants will become city property.

(b) **Excessive use**: The excessive use, as for a fire, will be billed according to the advice of the Township Fire Chief, or other firefighter, as to the quantity of water used.

25.305 <u>New connections to and extensions of water main</u> ---

(1) **Connections**: Any person, firm or corporation not included in a water main extension contract, who, after the completion of a water main, connects to the water main, shall be assessed a fee as follows:

$1,000.00	1"	Service Connection	0 - 100ft.
$1,250.00	1-1/4"	Service Connection	100 - 150ft.
$1,500.00	1-1/2"	Service Connection	150 - 200ft.
$2,000.00	2”	Service Connection	200 - 300ft.
$3,000.00	4"	Service Connection	300 - 600ft.
$4,500.00	6"	Service Connection	600 - 900ft.
$6,000.00	8"	Service Connection	900 - 1,200ft.
$7,500.00	10"	Service Connection	1,200 - 1,500ft.

(2) **Extensions**: The costs of extending water mains shall be based on the costs of such extension as determined by the Water Department. All extensions must be approved as otherwise provided for expenditures of the Public Works Commission.

25.306 - 25.307 (Reserved)

25.308 <u>Termination of service</u> --- In the event a water bill shall remain unpaid when due, the Superintendent may terminate or cause to be terminated service to the consumer at the premises involved or to any other premises to which the consumer at the premises involved or to any other premises to which the consumer shall move. Prior to suspending service, however, the superintendent shall give notice to the consumer prior to termination of the proposed termination of a procedure for challenging the termination as unjustified. The superintendent shall establish a

procedure whereby the consumer has an opportunity to present his or her complaint or dispute for review and resolution before the superintendent or some ether party designated by the superintendent to review dispute bills and to rectify errors. The notice required by this Section may include ordinary mail in the same manner as water bills are normally sent by the City of Quincy.

25.309 <u>Lien</u> ---

(1) **Generally**: Charges or rates for water service are liens upon the real estate upon or for which service is supplied whenever the charges or rates become delinquent. A bill will be considered delinquent if unpaid, in whole or in part, sixty (60) days after its due date. The lien hereby established shall have no preference over the rights of any purchases, mortgagee, judgment creditor or other lien holder arising prior to the filing of the notice of such lien in the office of the Recorder of Deeds of the county in which the real estate involved is located. The notice shall consist of a sworn statement by the superintendent, an attorney for the city, the Mayor or City Clerk which sets out (a) a description of such real estate sufficient for the identification thereof, (b) the amount of money due for such service, and (c) the date when such amount become delinquent. The city has the power to foreclose this lien in the same manner and with the same effects as in the foreclosure of mortgages on real estate. Any member of the legal department is authorized to institute such proceedings on behalf of the city.

(2) **Remedy not exclusive**: The other remedies provided herein shall not be deemed to be exclusive. The city shall also have the power, from time to time, to sue the occupant or user of the real estate in a civil action to recover the money due for services rendered, plus a reasonable attorney's fee, to be fixed by the court. Whenever a judgment is obtained in such a civil action, the foregoing provisions in this Section with respect to filing sworn statements of such delinquencies in the office of the Recorder of Deeds and creating a lien against the real estate shall not be effective thereafter as to charges sued upon and no lien shall exist thereafter against the real estate for the delinquency. Judgment in such a civil action operates as a release and waiver of the lien for the amount of the judgment.

ARTICLE IV PLUMBERS

Section 25.401 <u>Bond</u> --- No plumber shall do any plumbing work in connection with the water system of the City of Quincy unless he shall have executed an agreement to comply with the rules and regulations of the Water department and shall have given to said department a bond in the sum of one thousand dollars ($1,000.00) for the faithful performance of such agreement with sureties satisfactory to the Water Department Commission.

25.402 <u>Plumbing Code</u> --- The Plumbing Code adopted by the City Council of the City of Quincy and as amended from time to time by that body shall be the guide to be followed in all water supply work done by plumbers in the City of Quincy.

25.403 <u>Reports</u> --- A report is required from every master plumber in the city on or before the 10th of each month covering all work related to water piping and fixtures started during the previous calendar month. When no work was done during any calendar month, a report to that effect is required. Failure to file a report within sixty (60) days will result in forfeiture of the plumbers bond.

25.404 <u>Services</u> --- Each premise shall be supplied through a separate curb stop and box. The service pipe must have a minimum cover of 4.5 feet and maintain a minimum horizontal separation of ten (10) feet and vertical separation of eighteen (18) inches from any sanitary, storm or house drain. A bonded plumber must be employed by the customer when installing a water meter or connecting the customer's service pipe with the curb stop.

25.405 <u>Water meters</u> ---

(1) Any new water service where the meter size is between 5/8" through 1" shall be installed inside the customer's premises and possess a modular telephone jack #SE625A3-4 graybar or equivalent within two feet of the meter location. The telephone jack shall be provided by the customer and remain the property of the home owner. The applicant will be assessed a fee to have the automatic meter reading system installed and programmed by Water Department personnel.

(2) In such cases where the water meter is larger than 1", it will be required to be installed in a meter vault which shall be furnished and installed at the expense of the customer and conform to Water Department specifications. A 3/4" PVC pipe shall be installed in the same trench by the plumbing contractor simultaneously with the new water service line unless otherwise noted by the meter division of the Water Department. A #12 gauge copper pull wire shall be utilized in said 3/4" PVC pipe at the time of installation. The customer will be required to furnish the modular phone jack #SE625A3-4 graybar or equivalent with dial tone at the same location within the building. All new services that require 3/4" pipe will also be assessed a fee.

(3) Any existing water service in which telephone wire and an auxiliary jack are provided and installed by Water Department personnel for the purpose of retrofitting an automatic meter reading device shall become part of the customer's wiring at such time as this equipment becomes operational. The customer will be responsible for future maintenance, protection and upkeep of the phone wiring and jack furnished.

(4) Customers having an automatic meter reading system shall pay and assume any service or use charges assessed by the customer's telephone utility company resulting from the city’s use of the customer's telephone line for the automatic reading or costing of the meter.

25.406 **Turning services off and on** --- Plumbers are not authorized to turn water services off and on. After testing and completion of the plumbing work involved, always leave the service as you found it.

ARTICLE V CROSS CONNECTION CONTROL

Section 25.501 <u>Cross Connection Control - General Policy</u> ---

(1) **Purpose:** The purpose of these rules and regulations is:

(a) To protect the public water supply system from contamination or pollution by isolating within the customer's water system contaminants or pollutants which could backflow through the service connection into the public water supply system.

(b) To promote the elimination or control of existing cross connections, actual or potential, between the public or consumer's potable water system and non-potable water systems, plumbing fixtures and sources or systems containing substances of unknown or questionable safety.

(c) To provide for the maintenance of a continuing program of cross connection control which will prevent the contamination or pollution of the public and consumer's potable water systems.

(2) **Application:** These rules and regulations shall apply to all premises served by the public potable water supply system of the City of Quincy, Illinois.

(3) **Policy:** The owner or official custodian shall be responsible for protection of the public water supply system from contamination due to backflow or back-siphonage of contaminants through the customer's water service connection. If, in the judgment of the Superintendent of Water or his authorized representative, an approved backflow prevention device is necessary for the safety of the public water supply system, the Superintendent of Water shall give notice to the consumer to install such approved backflow prevention device at each service connection to the premises. The consumer shall immediately install such approved device or devices at his own expense; failure, refusal or inability on the part of the consumer to install such device or devices immediately shall constitute grounds for discontinuing water service to the premises until such device or devices have been installed. The consumer shall retain records of installation, maintenance, testing and repair as required in Section 25.505(4)(d) below for a period of at least five years.

25.502 <u>Definitions</u> --- The following definitions shall apply in the interpretation and enforcement of these regulations:

"**Fixed proper air gap**" means the unobstructed vertical distance through the free atmosphere between the water discharge point and the flood level rim of the receptacle.

"**Agency**" means Illinois Environmental Protection Agency.

"**Approved**" means backflow prevention devices or methods approved by the Research Foundation for Cross Connection Control of the University of Southern California, the American Water Works Association, the American National Standards Institute, the National Sanitation Foundation, or the Association of State Sanitary Engineers (ASSE)

"**Auxiliary water system**" means any water source or system on or available to the premises other than the public water supply system and includes the water supplied by the system. These auxiliary waters may include water from another purveyor's public water supply system; or water from a source such as wells, lakes, or streams, or process fluids; or used water. These waters may be polluted or contaminated or objectionable or constitute a water source or system over which the water purveyor does not have control.

"**Backflow**" means the flow of water or other liquids, mixtures, or substances into the distribution pipes of a potable water system from any source other than the intended source of the potable water supply.

"**Backflow prevention device**" means any device, method, or type of construction intended to prevent backflow into a potable water system. All devices used for backflow prevention in Illinois must meet the standards of the Illinois Plumbing Code and the Illinois Environmental Protection Agency.

"**Consumer**" or "**Customer**" means the owner, official custodian or person in control of any premises supplied by or in any manner connected to a public water system.

"**Consumer's water system**" means any water system located on the customer's premises. A building plumbing system is considered to be a customer's water system.

"**Contamination**" means an impairment of the quality of the water by entrance of any substance to a degree which could create a health hazard.

"**Cross connection**" means any physical connection or arrangement between two otherwise separate piping systems, one of which contains potable water and the other a substance of unknown or questionable safety or quality, whereby there may be a flow from one system into the other.

Direct cross-connection means a cross-connection formed when a water system is physically joined to a source of unknown or unsafe substance.

Indirect cross-connection means a cross connection through which an unknown substance can be forced, drawn by vacuum or otherwise introduced into a safe potable water supply.

"**Double check valve assembly**" means an assembly composed of single, independently acting check valves approved under ASSE Standard 1015. A double check valve assembly must include tight shutoff valves located at each end of the assembly and suitable connections for testing the water-tightness of each check valve.

"**Health hazard**" means any condition, device or practice in a water system or its operation resulting from a real or potential danger to the health and well being of consumers. The word "severe" as used to qualify "health hazard" means a hazard to the health of the user that could be expected to result in death or significant reduction in the quality of life.

"**Inspection**" means a plumbing inspection to examine carefully and critically all materials, fixtures, piping and appurtenances, appliances and installations of a plumbing system for compliance with requirements of the Illinois Plumbing Code, 77 Ill. Adm. Code 890.

"**Non-potable water**" means water not safe for drinking, personal, or culinary use as determined by the requirements of 35 Ill. Adm. Code 604.

"**Plumbing**" means the actual installation repair, maintenance, alteration or extension of a plumbing system by any person. Plumbing includes all piping, fixtures, appurtenances and appliances for a supply of water for all purposes, including without limitation lawn sprinkler systems, from the source of a private water supply on the premises or from the main in the street, alley or at the curb to, within and about any building or buildings where a person or persons live, work or assemble. Plumbing includes all piping, from discharge of pumping units to and including pressure tanks in water supply systems. Plumbing includes all piping, fixtures, appurtenances, and appliances for a building drain and a sanitary drainage and related ventilation system of any building or buildings where a person or persons live, work or assemble from the point of connection of such building drain to the building sewer or private sewage disposal system five feet beyond the foundation walls.

"**Pollution**" means the presence of any foreign substance (organic, inorganic, radiological, or biological) in water that tends to degrade its quality so as to constitute a hazard or impair the usefulness of the water.

"**Potable water**" means water which meets the requirements of 35 Ill. Adm. Code 604 for drinking, culinary, and domestic purposes.

"**Potential cross connection**" means a fixture or appurtenance with threaded hose connection, tapered spout, or other connection which would facilitate extension of the water supply line beyond its legal termination point.

"**Process fluid(s)**" means any fluid or solution when may be chemically, biologically or otherwise contaminated or polluted in a form or concentration such as would constitute a health, pollutional, or system hazard if introduced into the public or a consumer's potable water system. This includes but is not limited to:

(1) polluted or contaminated water ;

(2) process waters;

(3) used water originating from the public water supply system which may deteriorate in sanitary quality;

(4) cooling waters;

(5) questionable or contaminated natural waters taken from wells, lakes, streams, or irrigation systems;

(6) chemicals in solution or suspension;

(7) oils, gases, acids, alkalis any other liquid and gaseous fluids used in industrial or other processes, or for fire fighting purposes.

"**Public water supply**" means all mains, pipes and structures through which water is obtained and distributed to the public, including intakes and cribs, pumping stations, treatment plants, reservoirs, storage tanks and appurtenances, collectively or severally, actually used or intended for use for the purpose of furnishing water for drinking or general domestic use and which serve at least 15 service connections or which regularly serve at least 25 persons at least 60 days per year. A public water supply is either a "community water supply" or a "non-community water supply".

"**Reduced pressure principle backflow prevention device**" means a device containing a minimum of two independently acting check valves together with an automatically operated pressure differential relief valve located between the two check valves and approved under ASSE Standard 1013. During normal flow and at the cessation of normal flow, the pressure between these two checks shall be less than the supply pressure. In case of leakage of either check valve, the differential relief valve, by discharging to the atmosphere, shall operate to maintain the pressure between the check valves at less than the supply pressure. The unit must include tightly closing shutoff valves located at each end of the device, and each device shall be fitted with properly located test cocks.

"**Service connection**" means the opening, including all fittings and appurtenances, at the water main through which water is supplied to the user.

"**Survey**" means the collection of information pertaining to a customer's piping system regarding the location of all connections to the public water supply system and must include the location, type and most recent inspection and testing date of all cross connection control devices and methods located within that customer's piping system. The survey must be in written form, and should not be an actual plumbing inspection.

"**System hazard**" means a condition through which an aesthetically objectionable or degrading material not dangerous to health many enter the public water supply system or a consumer's potable water system.

"**Used water**" means any water supplied by a public water supply system to a consumer's water system after it has passed through the service connection and is no longer under the control of the water supply official custodian.

"**Water purveyor**" means the owner of official custodian of a public water system.

25.503 <u>Water system</u> ---

(1) The water system shall be considered as made up of two parts: the public water supply system and the consumer's water system.

(2) The public water supply system shall consist of the source facilities and the distribution system, and shall include all those facilities of the potable water system under the control of the Superintendent of Water up to the point where the consumer's water system begins.

(3) The source shall include all components of the facilities utilized in the production, treatment, storage, and delivery of water to the public water supply distribution system.

(4) The public water supply distribution system shall include the network of conduits used to deliver water from the source to the consumer's water system.

(5) The consumer's water system shall include all parts of the facilities beyond the service connection used to convey water from the public water supply distribution system to points of use.

25.504 <u>Cross connection prohibited</u> --

(1) Connections between potable water systems and other systems or equipment containing water or other substances of unknown or questionable quality are prohibited except when and where approved cross connection control devices or methods are installed, tested and maintained to insure proper operation on a continuing basis.

(a) No physical connection shall be permitted between the potable portion of a supply and any other water supply not of equal or better bacteriological and chemical quality as determined by inspection and analysis by the Agency.

(b) There shall be no arrangement or connection by which an unsafe substance may enter a supply.

25.505 <u>Survey and investigations</u> --

(1) The consumer's premises shall be open at all reasonable times to the approved cross connection control device inspector for the inspection of the presence or absence of cross connections within the consumer's premises, and testing, repair and maintenance of cross connection control devices within the consumer's premises.

(2) On request by the Superintendent of Water, or his authorized representative, the consumer shall furnish information regarding the piping system or systems of water use within the customer's premises. The consumer's premises shall be open at all reasonable times to the Superintendent of Water for the verification of information submitted by the inspection consumer to the public water supply custodian regarding cross connection inspection results.

(3) It shall be the responsibility of the water consumer to arrange periodic surveys of water use practices on his premises to determine whether there are actual or potential cross

connections to his water system through which contaminants or pollutants could backflow into his or the public potable water system. All cross connection control or other plumbing inspections must be conducted in accordance with Ill. Rev. Stat. 1983, ch. 111, par. 1103(1).

(4) It is the responsibility of the water consumer to prevent backflow into the public water system by ensuring that:

(a)All cross connections are removed; or approved cross connection control devices are installed for control of backflow and back-siphonage.

(b) Cross connection control devices shall be installed in accordance with the manufacturer's instructions.

(c) Cross connection control devices shall be inspected at least annually by a person approved by the Agency as a cross connection control device inspector (CCDI). The inspection of mechanical devices shall include physical testing in accordance with the manufacturer's instructions.

(d) Testing and Records.

1.) Each device shall be tested at the time of installation and thereafter at least annually or more frequently if recommended by the manufacturer of said device.

2.) Records submitted to the community public water supply shall be available for inspection by Agency personnel in accordance with Ill. Rev. Stat. 1983, ch. 111-1/2, par. 1104 (e).

3.) Each device shall have a tag attached listing the date of most recent test, name of CCCDI, and type and date of repairs.

4.) A maintenance log shall be maintained and include:

a.) date of each test;
b.) name and approval number of person performing the test;
c.) test results;
d.) repairs or servicing required;
e.) repairs and date completed; and
f.) serving performed and date completed.

25.506 <u>Where protection is required</u> ---

(1) An approved backflow prevention device shall be installed on each service line to a consumer's water system serving premises, where in the judgment of the Superintendent of Water, actual or potential hazards to the public water supply system exist.

(2) An approved backflow prevention device shall be installed on each service line to a consumer's water system serving premises where the following conditions exist:

(a) Premises having an auxiliary water supply, unless such auxiliary supply is accepted as an additional source by the Superintendent of Water and the source is approved by the Illinois Environmental Protection Agency.

(b) Premises on which any substance is handled which can create an actual or potential hazard to the public water supply system. This shall include premises having sources or systems containing process fluids or water originating from the public water supply system which are no longer under the sanitary control of the Superintendent of Water.

(c) Premises having internal cross connections that, in the judgment of the Superintendent of Water, are not correctable or intricate plumbing arrangements which make it impractical to determine whether or not cross connections exist.

(d) Premises where, because of security requirements or other prohibitions or restrictions, it is impossible or impractical to make a complete cross connection survey.

(e) Premises having a repeated history of cross connections being established or re-established.

(3) An approved backflow prevention device shall be installed on each service line to a consumer's water system serving, but not necessarily limited to, the following types of facilities unless the Superintendent of Water determines that no actual or potential hazard to the public water supply system exist:

(a) Hospitals, mortuaries, clinics, nursing homes;

(b) Laboratories;

(c) Piers, docks, waterfront facilities;

(d) Sewage treatment plants, sewage pumping stations or storm water pumping stations;

(e) Food or beverage processing plants;

(f) Chemical plants;

(g) Metal plating industries;

(h) Petroleum processing or storage plants;

(i) Radioactive material processing plants or nuclear reactors;

(j) Car washes.

25.507 <u>Type of protection required</u> ---

(1) The type of protection required under Section 6.1, 6.2, and 6.3 of these regulations shall depend on the degree of hazard which exists as follows:

(a) An approved fixed proper air gap separation shall be installed where the public water supply may be contaminated with substances that could cause a severe health hazard.

(b) An approved fixed proper air gap separation or an approved reduced pressure principle backflow prevention device shall be installed where the public water supply system may be contaminated with a substance that could cause a system or health hazard.

(c) An approved fixed proper air gap separation or an approved reduced pressure principle backflow prevention device shall be installed where the public water supply system may be polluted with substances that could cause a pollution hazard not dangerous to health.

(2) The type of protection required under Section 6.4 of these regulations shall be an approved fixed proper air gap separation or an approved reduced pressure principle backflow prevention device.

(3) Where a public water supply or an auxiliary water supply is used for a fire protection system, reduced pressure principle backflow preventers shall be installed on fire sprinkler systems connected to the public water supply when:

(a) the sprinkler system contains antifreeze;

(b) water is pumped into the system from another source; or

(c) there is a connection whereby another source can be connected to the sprinkler system.

25.508 <u>Backflow prevention devices</u> ---

(1) All backflow prevention devices or methods required by these rules and regulations shall be approved by the Research Foundation for Cross Connection Control of the University of

Southern California, American Water Works Association, American Society of Sanitary Engineering, or American National Standards Institute or certified by the National Sanitation Foundation to be in compliance with applicable industry specification.

(2) Installation of approved devices shall be made in accordance with 35 I11. Adm. Code 653.802, and only as specified by the Research Foundation for Cross Connection Control of the University of Southern California or applicable industry specifications. Maintenance as recommended by the manufacturer of the device shall be performed. Manufacturer's maintenance manual shall be available on site. Devices must be installed according to the manufacturer's instructions, as installation is an integral part of the testing procedures required for approved standards by all national agencies.

25.509 <u>Inspection and maintenance</u> ---

(1) It shall be the duty of the consumer at any premises on which backflow prevention devices required by these regulations are installed to have inspection, tests, maintenance and repair made in accordance with the following schedule or more often where inspections indicate a need or are specified in manufacturer's instructions.

(a) Fixed proper air gap separation shall be inspected at the time of installation and at least annually thereafter.

(b) Double check valve assemblies shall be inspected and tested for tightness at time of installation and at least annually thereafter, and required service performed within fifteen (15) days.

(c) Reduced pressure principle backflow prevention devices shall be tested at least annually or more frequently if recommended by the manufacturer, and required service performed within five (5) days.

(2) Testing shall be performed by a person who has been approved by the Agency as competent to service the device. Proof of approval shall be in writing.

(3) Each device shall have a tag attached listing the date of most recent test of visual inspection, name of tester, and type and date of repairs.

(4) A maintenance log shall be maintained and include:

(a) date of each test or visual inspection;

(b) name and approval number of person performing the test or visual inspection;

(c) test results;

(d) repairs or servicing required;

(e) repairs and date completed; and

(f) servicing performed and date completed.

(5) Whenever backflow prevention devices required by these regulations are found to be defective, they shall be repaired or replaced at the expense of the consumer without delay.

(6) Backflow prevention devices shall not be bypassed, made inoperative, removed or otherwise made ineffective without specific authorization by the Superintendent of Water.

25.510 <u>Booster pumps</u> ---

(1) Where a booster pump has been installed on the service line to or within any premises, such pump shall be equipped with a low pressure cut-off device designed to shut off the booster pump when the pressure in the service line on the suction side of the pump drops to 20 psi or less.

(2) It shall be the duty of the water consumer to maintain the low pressure cut-off device in proper working order and to certify to the Superintendent of Water, at least once a year, that the device is operable.

25.511 <u>Violations - penalties</u> ---

(1) **Generally**: Any person who shall violate any of the provisions of this title shall, in addition to such other relief as provided herein or as the law may afford, but subject to the punishment set forth in Chapter 32 (penalties) of this Code.

(b) **Nuisance abatement**: In addition to the foregoing any violation of the provisions of this title shall be subject to abatement as set forth in Chapter 21 (Health Regulations) of this Code.

(c) **Discontinuance of service**: The superintendent, or his or her designee, shall have the authority to deny or discontinue water service for any violation of the provisions of this title, provided that prior notice be given if practical to the consumer and/or occupant of the premises for which the service is to be terminated. Water services to such premises shall not be restored until the consumer has complied with the terms of this title and corrected or eliminated such conditions, defects or actions constituting the violation of this title, to the satisfaction of the superintendent and a required reconnection fee is paid. Water service to any premises may be cancelled without notice to any party to prevent actual or anticipated contamination or pollution of the public water supply, provided that, in the reasonable opinion of the Superintendent of Water or the Illinois Environmental Protection Agency, such action is required to prevent actual or potential contamination or pollution of the public water supply.

(d) **Liability**: Neither the Quincy public water supply, the Superintendent of Water or its agents or assigns shall be liable to any customer of the Quincy public water supply for any injury, damages, or lost revenues which may result from termination of said customer's water supply in accordance with the terms of this ordinance, whether or not said termination of the water supply was with or without notice.

CHAPTER 26

ELECTRICITY

Section 26.001 <u>Definitions</u> --- For purposes hereof, the definitions set forth in Section 19.401 shall apply, except as the context may otherwise require.

26.002 <u>Rules and regulations</u> ---

(l) **National Code**: All electrical construction materials and work performed in the City of Quincy shall conform to the National Electrical Code, 2002 Edition, NFPA 70-2001 as adopted by the National Fire Protection Association and approved by the American National Standard Institute, one (1) copy of which is and shall be kept on file in the office of the City Clerk and there kept available for public use, inspection and examination.

(2) **Other rules**: All electrical materials and work performed in the City of Quincy shall further conform to the following other rules and regulations:

(a) Any rules and regulations of applicable utility companies.

(b) Armored cable, type AC cable (as provided in Article 333 of the National Electric Code) and type MC cable (as provided in Article 334 of the National Electric Code) shall be prohibited for use in any electrical work.

(c) Non-metallic sheathed cable, type NM or MNC, is prohibited for use as follows:

1.) Family dwellings that are more than two (2) floors above grade.

2.) In all commercial buildings or structures and other structures including motels, hotels, nursing homes, and dormitories.

3.) Except in repair work installed in then existing buildings or structures not previously wired with raceways, then required in connection with new or additional construction, or as approved by the Building Inspector, when there existing buildings or structures make it unreasonable to wire with raceways.

(d) Except for circuits thirty (30) volts and less, minimum wire size shall be as follows:

1.) Individually protected control circuits……..#16 AWG

2.) Lighting outlet, switching circuits, loops…..……..#14 AWG

3.) Receptacle, branch and equipment feeder circuits…..#12 AWG

(e) Conductors smaller than #4 AWG constructed from aluminum or copper-clad aluminum shall be prohibited where permanently installed on building interior.

(f) Knob-and-tube and open wiring on insulators methods of wiring shall be prohibited in all types of construction and repair.

(g) A separate circuit protected by a circuit breaker or fusible disconnect shall be installed for each condensing unit, outdoor unit of heat pump system, indoor unit, of heat pump system and electric, oil or gas fired furnace.

(h) A disconnecting means such as an pull-out fuse block, circuit breaker, or disconnect switch shall be installed on, in (if factory installed) or within sight and five (5) feet of each condensing unit or outdoor unit of heat pump system installed on building exterior.

(i) Circuit thirty (30) volts or more installed on surface of heating units such as indoor unit, heaters and furnaces shall be encased in metallic raceways.

(j) Raceways constructed from aluminum shall not be installed embedded in concrete, masonry or plaster construction.

(k) Service entrances 400 amp capacity or less shall not be installed using parallel conductors. For service 401 amp and larger each service entrance raceway will contain not more than one (1) set of service conductors.

(1) Service entrance conductors shall be installed exposed in a permanent accessible location or in a raceway, installed, exposed or concealed.

(m) Capacity of service entrance for all new or rewired residential occupancies shall be a minimum 100A, 120/240V, 1-phase.

(n) Fusible service disconnecting means shall be installed a maximum distance from exterior wall of six (6) (wire feet) where conductors are installed exposed and twenty (20) (wire feet) where conductors are encased full length in approved raceway.

(o) Service entrance equipment shall have minimum capabilities of interrupting faults currents of 10,000 amperes RMS symmetrical or equal to or greater than available (fault current) at each particular installation as determined by utility company.

(p) Service equipment for all new installations shall be bonded to a grounding electrode system consisting of or equivalent to a minimum of one (1) 5/8" dia. x 10' long, or 3/4" dia. x 8' long, approved copper or copper-clad driven ground rod installed in an approved location and for those structures having metallic water service piping, such piping shall also be properly grounded to the electrical service.

(q) Electrical non-metallic tubing, flexible metallic tubing, flexible metal conduit and liquidtite flexible conduit as referred to in Articles 331, 349, 350 and 351 of N.E.C. may be used as indicated but limited to a maximum length run of 6 feet, and only as final connection to an electrical apparatus (such as light fixtures, motors, direct connect equipment, and transformers). Under unusual conditions lengths in excess of 6 feet may be, used only with written approval of the building inspectors.

(r) Snap/toggle switches shall be connected to premises electrical service grounding system through metal raceway system or equipment ground conductor.

(s) Temporary service to a temporary structure is limited to 180 days. The temporary service must be removed within the 180 day temporary service period and may not be replaced until the expiration of 180 days from the date of removal.

(3) **Occupancy classifications**: In any mixed use occupancy that classification requiring the most strict or rigid electrical construction shall apply throughout the entire structure unless the building contains occupancy separation walls.

26.003 <u>Permits</u> ---

(1) **Generally**: A permit shall be required to construct, alter repair an electrical distribution system installed in any residence, apartment or commercial building within the limits of the City of Quincy or (pursuant to Section 29.1116 of this Code) within the contiguous territory within one and one-half (1-1/2) miles beyond the corporate limits (herein "city jurisdiction"); provided no permit shall be required for maintenance or minor electrical work, work on distribution systems and related equipment owned by public utility companies or common carriers under the jurisdiction of the Illinois Commerce Commission and used in their operations, or radio or television equipment used for wireless transmission or reception of sounds and signals. A permit shall further be required by the electrical contractor doing work in new construction or on major interior remodeling projects on premises of factory or commercial or industrial facility within the limits of the city jurisdiction; provided no permit shall be required for any electrical work performed by direct, full-time employees of industrial or manufacturing firms, and whose work shall be under direct control of a supervising electrician possessing a master electrician's licenses issued under Section 19.411(4). An electrical permit shall be

required irrespective of whether other permits are required including, but not limited to building and plumbing permits. Prior to providing any equipment or service in connection with any electrical work, the applicable public utility shall require evidence that a permit hereunder has been issued.

(2) **Fees**:

(a) **Residential fee structure with new service:** (fee equal to sum of subparagraphs 1, 2 and 3.)

1.) **Service**:

	Effect. 1/1/02	Effect. 1/1/03	Effect. 1/1/04	Effect. 1/1/05	Effect. 1/1/06	Effect. 1/1/07
100 Amp	$ 55.00	$ 60.00	$ 65.00	$ 70.00	$ 75.00	$ 80.00
101 to 200 Amp	$ 65.00	$ 70.00	$ 75.00	$ 80.00	$ 85.00	$ 90.00
201 to 400 Amp	$ 85.00	$ 90.00	$ 95.00	$ 100.00	$ 105.00	$ 115.00
401 to 600 Amp	$ 125.00	$ 130.00	$ 135.00	$ 140.00	$ 145.00	$ 150.00
601 to 800 Amp	$ 155.00	$ 160.00	$ 165.00	$ 170.00	$ 175.00	$ 180.00

2.) 0 - 120 volt wiring - including but not limited to light fixture outlets, receptacles, thermostats, chimes and load connections.

3 through 40 Openings	$ 20.00	$ 21.00	$ 22.00	$ 23.00	$ 24.00	$ 25.00
Over 40 openings	$ .50	$ .55	$ .60	$ .65	$ .70	$ .75

3.) 240 volt wiring - including but not limited to 240 volt receptacles, clothes dryers, air conditioner/heat pump condensing units, air handlers, ranges, ovens, welders and hot water heaters:

First Opening	$ 17.00	$ 18.00	$ 19.00	$ 20.00	$ 21.00	$ 22.00
Each Additional Opening	$ 6.00	$ 7.00	$ 8.00	$ 9.00	$ 10.00	$ 11.00

(b) **Existing residential building with no new service**:

1.) 0 - 120 volt wiring - including but not limited to light fixture outlets, receptacles, thermostats, chimes and load connections:

	Effect. 1/1/02	Effect. 1/1/03	Effect. 1/1/04	Effect. 1/1/05	Effect. 1/1/06	Effect. 1/1/07
3-25 openings	$ 30.00	$ 31.00	$ 32.00	$ 33.00	$ 34.00	$ 35.00
over 25 openings	$ .50	$ .55	$ .60	$ .65	$ .70	$ .75

2.) 240 volt wiring:

First Opening	$ 17.00	$ 18.00	$ 19.00	$ 20.00	$ 21.00	$ 22.00
Each Additional Opening	$ 5.00	$ 6.00	$ 7.00	$ 8.00	$ 9.00	$ 10.00

(c) **Commercial - industrial fee structure**: Wiring diagrams must be submitted prior to issuance of permit if total cost of work is to exceed $1,000.00 (fee equal to sum of subparagraphs 1 and 2):

1.) **Service:** (includes both new and upgrades):

	Single Phase 120/240 VOLT	Three Phase 240 VOLT 120/240 VOLT 120/208 VOLT	Three Phase 277/480 VOLT 480 VOLT
100 Amp	$ 60.00	$ 70.00	$ 90.00
101 to 200 Amp	70.00	90.00	140.00
201 to 400 Amp	90.00	130.00	230.00
401 to 600 Amp	130.00	160.00	300.00
601 to 800 Amp	160.00	200.00	360.00
801 to 1200 Amp	180.00	230.00	440.00
1201 to 1600 Amp	220.00	290.00	590.00
1601 to 2000 Amp	240.00	320.00	650.00
2001 to 3000 Amp	280.00	340.00	790.00
3001 to 4000 Amp	320.00	440.00	930.00

If the voltage for a new service is greater than 601 volts, then the fee is calculated at 25 cents per KW. i.e - fee = (voltage x 1.73 x AMP/1000 x .25 (AMP = service size amperage capacity).

2.) **Building wiring:** (fee equals sum of subparagraphs a, b, c, & d):

a.) 30 - 120 volt wiring opening - including but not limited to light fixtures, receptacles, load connections, and signs. Each individual mounted light fixture in the voltage range of 120 through 480 volts shall be considered an opening in this category:

	Effect. 1/1/02	Effect. 1/1/03	Effect. 1/1/04	Effect. 1/1/05	Effect. 1/1/06	Effect. 1/1/07
3 - 40 openings	$ 45.00	$ 47.00	$ 49.00	$ 51.00	$ 53.00	$ 55.00
over 40 openings	$ 1.50	$ 1.75	$ 2.00	$ 2.25	$ 2.50	$ 2.75

b.) 208 - 480 volt wiring - including but not limited to receptacles, signs and load connections:

First openings	$ 40.00	$ 42.00	$ 44.00	$ 46.00	$ 48.00	$ 50.00
Each additional opening	$ 4.00	$ 4.50	$ 5.00	$ 5.50	$ 6.00	$ 6.50

c.) Energy management systems:

Control console	$ 55.00	$ 57.00	$ 59.00	$ 61.00	$ 63.00	$ 65.00
Each unit managed	$ 4.50	$ 5.0	$ 5.50	$ 6.0	$ 6.50	$ 7.00

d.) Smoke/fire detection systems - including but not limited to heat detectors, smoke detectors, pull station, alarm horns and external relays:

	Effect. 1/1/02	Effect. 1/1/03	Effect. 1/1/04	Effect. 1/1/05	Effect. 1/1/06	Effect. 1/1/07
Control console	$ 55.00	$ 57.00	$ 59.00	$ 61.00	$ 63.00	$ 65.00
Each unit managed	$ 4.50	$ 5.00	$ 5.50	$ 6.00	$ 6.50	$ 7.00

(d) **Commercial industrial fee structure - no new service:** (fee equal to sum of subparagraphs 1. 2 and 3):

1.) Building wiring: (Fee equals sum of a, b, c & d):

a.) 30 - 120 volt wiring opening - including but not limited to light fixtures, receptacles, load connections, and signs. Each individual mounted light fixture in the voltage range of 120 through 480 volts shall be considered an opening in this category:

3 - 40 openings	$ 65.00	$ 67.00	$ 69.00	$ 71.00	$ 73.00	$ 75.00
over 40 openings	$ 5.00	$ 6.00	$ 7.00	$ 8.00	$ 9.00	$ 10.00

b.) 208 - 480 volt wiring, - including but not limited to power receptacles, signs and load connections:

First opening	$ 59.00					
Each additional opening	$ 4.50	$ 5.00	$ 5.50	$ 6.00	$ 6.50	$ 7.00

c.) Energy management systems:

Control console	$ 55.00	$ 57.00	$ 59.00	$ 61.00	$ 63.00	$ 65.00
Each unit managed	$ 4.50	$ 5.00	$ 5.50	$ 6.00	$ 6.50	$ 7.00

d.) Smoke/fire detection systems - including but not limited to heat detectors, smoke detectors, pull station, alarm horns and external relays.

Control console	$ 55.00	$ 57.00	$ 59.00	$ 61.00	$ 63.00	$ 65.00
Each unit managed	$ 4.50	$ 5.00	$ 5.50	$ 6.00	$ 6.50	$ 7.00

(3) **Certificate required**: Except as otherwise authorized herein or pursuant to Article IV (Electrical Contractors) of Chapter 19 (Business Licenses) of this Code, no permit required hereunder shall be issued except to an electrical contractor holding a valid electrical contractors certificate or registration pursuant to Section 19.402 of this Code. Except as otherwise authorized herein or pursuant to Article IV of Chapter 19, no person, owner, contractor, firm or other entity shall allow, authorize or permit any electrical work to be performed for or on behalf of such person, owner, contractor, firm or other entity unless the person, firm or corporation performing such work shall have the required permit therefore, nor shall any such person, owner, contractor, firm or other entity allow a permit to be issued for electrical work which is to be performed by a non-employee of that entity or an employee performing in other than his capacity as an employee of such entity.

Applications for above permits shall be made by the person, firm or corporation performing electrical work and shall be made by completing permit application form provided by the Building Inspector.

26.004 <u>Electrical Inspectors - office and duty</u> --- The Electrical Inspectors shall administer and enforce the provisions of Chapters 11, 19 and 26 of this Code subject to the supervision and appeal authority of the Electrical commission pursuant to Section 11.705 of this Code. The Electrical Inspector in conjunction with the department shall keep a record of permits issued, inspections made and other official work performed in accordance with the provisions of Chapters 11, 19 and 26. The record of each ruling and determination made under the provisions of Chapters 11, 19 and 26 shall be kept and notification in writing of these rules and determinations shall be given to all individuals involved.

26.005 <u>Prohibited activity</u> --- The Electrical Inspectors shall not engage directly or indirectly in the sale, furnishing, installation or maintenance of buildings over which they have exercised official inspection authority, nor shall they maintain a financial interest in any concern engaging in such business in the city. Violation of these provisions shall be good and sufficient cause for suspension and removal. Nothing in this section shall be construed to prohibit the Electrical Inspector from the sale, purchase, or maintenance of real property as a personal residence or as investment rental property in the city; provided, however, that said inspectors shall not exercise official inspection authority over the construction, remodeling or maintenance of such structures or electrical devices located therein.

26.006 <u>Violations and penalties</u> ---

(1) **Unlawful acts**: It shall be unlawful for any person, firm or corporation to install, erect, construct, alter, extend, repair, or remove any electrical distribution system regulated by the electrical code, or cause the same to be done, in conflict with or in violation of any of the provisions of the electrical code as hereby adopted.

(2) **Authority**: The Electrical Inspector is hereby authorized to inspect any and all electrical installations within the city jurisdiction, to placard and order removed or remodeled and put in proper and safe condition for the prevention of fire and safety of life, and electrical heating and lighting apparatus, power generators, motors, machinery, fixtures and connections, electrical equipment used in the supply, distribution or utilization of electrical current for light, heat or power purposes and to control the disposition and arrangements of the same so that persons and property shall not be endangered.

(3) **Notice**: The Electrical Inspector or other enforcing officer shall serve a notice or order on one (1) or more of the persons, firms or corporation responsible for the installation, erection, construction, alteration, extension, repair, or removal, demolition, any electrical distribution system or equipment in violation of the provisions of the electrical code, in violation of a detailed statement or a plan approved thereunder, or in violation of a permit or certificate issued under the provisions of the electrical code. Such order shall direct the discontinuance of the illegal action or condition of the abatement of the violation. For this purpose, the owner, lessee or licensee of the building or structure or equipment shall be considered responsible as well as any persons, firm or corporation engaged in such activities.

(4) **Summary abatement of violation**: If the necessary changes or repairs are not completed within the time specified in any notice, the Electrical Inspector or enforcing officer shall have the authority to disconnect the electrical service to the equipment or installation in question where the maintenance or continuance of the violation creates an imminent threat of

serious injury to persons or property in addition, and even if prior notice has not been given, if the Electrical Inspector or enforcing officer in the course of discharging his duties, discovers any violation of this code, which creates an imminent threat of serious injury to persons or property, and the circumstances do not allow for notice to be given, as provided above, or if any electrical equipment may interfere with the work of the Fire Department, the Electrical Inspector shall have the authority to disconnect or cause the immediate disconnection of such service or equipment (without prior notice). If fires have damaged the wiring of any building or structure, reconnection to electrical supply shall not be made until authorized by the Inspector, enforcing officer, Building Inspector, Fire Chief or their respective designees.

26.007 Required inspections --- Upon the completion of any installation or alteration of electrical equipment for which a permit or license is required, the person, firm, or corporation, making the installation or alteration shall notify the Inspection Department. An inspection of the installation or alteration shall be made within two (2) business days of the time such notice is received, or as soon thereafter as practical. If the Electrical Inspector shall find such installation in conformity with the provisions of Chapter 19 and 26, it shall approve the installation with the supply of electricity, and a written notice of such authorization be sent to the agency supplying the electrical service and contractor. If the authorization is issued for the installation, connection and use of a temporary service, the permit shall designate the time of expiration but may be revoked by the department for cause before expiration. When any electrical equipment is to be hidden or concealed from view by the permanent construction of the building, the person, firm, or corporation installing the equipment shall notify the Inspection Department and such equipment shall not be concealed until it has been inspected and approved or until two (2) business days shall have elapsed from the time of the notification; provided that on any large installation, where the concealment of equipment proceeds in stages, the person, firm, or corporation installing such equipment shall give the Inspection Department notice, and inspection shall be made periodically during the progress of the work..

26.008 Right of entry; removal or remedying defective or unsafe conditions --- The Inspection Department shall have the right at reasonable times to enter any building, and shall be given prompt access thereto upon application to the owner or individual having charge or control, thereof, for the purpose of making inspections and tests of the electrical distribution systems therein, or otherwise in enforcing the provisions of this Code. Whenever, in the judgment of the Electrical Inspector or enforcing officer, any electrical wiring or appliance is defective, or dangerous, or whenever, from any cause, the premises shall be in such defective condition as to present a danger of fires, or accidents to workmen or the general public, the Electrical Inspector or enforcing officer shall at once cause the removal of such defects and the remedying of such improper conditions as provided in Section 26.006.

26.009 Stop orders --- Wherever any work or project governed by provisions of Chapter 19 and 26 is being performed or carried on in violation of any of the provisions of these Sections, it shall be the duty of the Electrical Inspector or enforcing officer to post a printed notice of violation to "stop work" signed by the Inspector, on the premises where such work is in progress, and to notify the individual in charge of such work on the premises of such order. After the posting of such notice, it shall be unlawful for any individual to do any further work on such project until

such time as the defects or violations of Chapters 19 or 26 have been eliminated or remedied to the satisfaction of the Inspection Department and such “stop work” sign has been removed by the Inspector. However no stop work order so posted shall affect work not governed by Chapter 19 or 26 except where the progress of such work would interfere with inspection of work governed by said Chapter.

26.010 Appeal --- Any owner or person who is aggrieved or affected by an order, ruling, decision or interpretation of the Inspector or other enforcing officer in any of the matters relative to the interpretation or enforcement of any of the provisions of the Electrical Code may appeal the order, ruling, decision or interpretation to the Building Commission established by and in accordance with Article XVII (Electrical Commission) of Chapter 11 (Boards and Commissions) of the Municipal Code of Quincy.

26.011 Chapter not to exempt --- Nothing in this Chapter shall be construed to exempt any person, firm or corporation from liability now existing or that in the future may arise to the city of any person for damage from negligence or from defective construction relating to maintaining or making connection with any such system of electrical power within the corporate limits of the city, nor to release any person, firm or corporation from any restriction under ordinances granting them their respective franchises; nor shall the city be held to assume any liability by reason of the inspection authorized herein or certificate or permit being issued pursuant to the provisions of this Chapter, or from a failure of the Building Inspector to perform his full duties hereunder.

26.012 Penalty --- Any person, firm or corporation who or which violates any of the provisions of this article shall, in addition to such other remedies as the law may afford, be punishable as set forth in Chapter 32 of this Code.

In addition to the penalties provided it Chapter 32, any person, firm, corporation continuing to perform electrical work contrary to any "stop-work orders" issued pursuant to Chapters 11, 19 and 26 of this Code shall be fined not less than $200.00 nor more than $1000.00 upon conviction thereof. This provision shall not apply to work undertaken to correct or remove a violation of this Code or other unsafe condition as directed by the Electrical Inspector.

CHAPTER 27

FLAMMABLE LIQUIDS

Section 27.001 **Prohibition** --- It shall be unlawful to store, handle, or offer for sale any flammable or volatile liquids in violation of any provision of this Chapter.

27.002 **Enforcement** --- It shall be the duty of the Fire Chief and the Building Inspector, with the cooperation of the Police Department, to see to the enforcement of the provisions of this Chapter.

27.003 **Classification** --- For the purpose of this Chapter, flammable liquids are divided into three classes, according to flash point, as follows:

Class I: Liquids with a flash point at or below 20 degrees Fahrenheit (4 degrees Centigrade) closed cup tester.

Class II: Liquids with a flash point above that for Class I and at or below 70 degrees Fahrenheit (21 degrees Centigrade).

Class III: Liquids having a flash point above 70 degrees Fahrenheit closed cup tester.

The flash point shall be as determined with the Elliot, Abel, Abel Pensky or the Tag closed cup testers, but the Tag closed cup tester (standardized by the United States Bureau of Standards) shall be authoritative in case of dispute. All tests shall be made in accordance with the methods adopted by the American Society for testing materials.

Representative examples of the classes of flammable liquids are:

Class I	Class II	Class III
Methyl-acetate	Alcohol	Kerosene
Ether	Amyl acetate	Amyl alcohol
Carbon bl-sulphide	Tuluol	Turpentine
Gasoline	Ethyl acetate	Fuel Oil
Naphtha	Methyl alcohol	Stoddard solvent
Benzol	Ethyl alcohol	
Acetone	Pyridine	
Collodion		

27.004 **Small storage limited** --- Storage of flammable liquids of Classes I, II and III shall be in accordance with the rules governing general storage and service stations except:

(1) Not to exceed five gallons of crude petroleum, benzine, benzol, gasoline, naphtha and their compounds may be kept on hand if stored in a proper safety container, remote from flame or open fire. Such storage must not be in any cellar, basement, or pit, and should be in a room with direct ventilation to the outside and preferably in any outbuilding or garage.

(2) Ten gallons of kerosene may be stored above ground in a proper safety can and sixty gallons may be stored for the retail trade within a building, provided storage is in an approved tank. Tank shall set in a metal pan extending at least eight inches in front. Tank should be located on the first floor where the influx of natural light is sufficient to light the room, and reasonable ventilation must be provided.

27.005 **Generally** ---- Above ground storage tanks: The storage of flammable liquids in outside, above tanks is prohibited unless a permit for the same is obtained as hereafter provided and said tanks are constructed and comply with the following regulations and specifications:

(1) **Tank and vault specifications**: Any above ground storage tank shall meet the following specifications:

(a) A steel tank meeting the requirements of the National Fire Prevention Association (NFPA) rule 30, for above ground tanks, which NFPA 30, is incorporated herein by reference.

(b) Steel tanks, having a capacity in excess of 301 gallons, shall have a six (6) inch emergency vent, and tanks having a capacity of 300 gallons or less shall have a four (4) inch emergency vent.

(c) Steel tank openings shall be threaded, except for any detector tube.

(d) Steel tanks and secondary containment tanks shall be encased in a vault having reinforced concrete walls of not less than six (6) inches.

(e) Vaults shall be constructed so as to permit monitoring between the primary and secondary containment tanks.

(f) Vaults shall be placed on a reinforced concrete pad, consisting of exterior steel posts located not more than four (4) feet in width from each other, which pad and posts shall be approved by the Building Inspector.

(g) Exterior vault surfaces shall be covered by a protective epoxy coating or similar surface.

(h) Vaults shall be marked with the name of the product stored and by the words "Flammable - KEEP FIRE AND FLAME AWAY", both in letters at least four (4) inches high and in contrasting color from the vault.

(i) Vaults shall contain a minimum five (5) gallon recovery or spill containment vessel mounted to the vault fill pipe or on the top of the vault system.

(2) **Public use prohibited**: Above ground storage tanks shall be used solely for storage at commercial, industrial, governmental or manufacturing establishments and solely for the purpose of fueling vehicles used in connection with their respective business or operation and not for the purpose of retail sale or other sale of the stored flammable liquid.

(3) **Size and location**: Any above ground tank shall not exceed 2,500 gallon capacity and no more than two (2) such containers may be located on any single lot, tract, property or any combination or series of lots, tracts or properties which are adjacent or contiguous to each other and which are owned or titled in the name of the same person or persons. Any such tanks shall further be located the minimum distances described below from the following:

(a) A minimum of fifty (50) feet from any residential structure.

(b) A minimum of eighty-five (85) feet from any school, church, hospital, nursing home or other place of public assembly or accommodation.

(c) A minimum of thirty (30) feet from any other building or flammable stored liquid.

(d) A minimum of three hundred (300) feet from any mine shaft or any air or escape shaft for any mine.

(e) A minimum of two hundred (200) feet from any well located on property adjacent to the property upon which the tank is located.

(f) A minimum of seventy-five (75) feet from any well located on the same property as the property upon which the well is located.

(g) A minimum of thirty (30) feet from any adjoining property line, and from all sewers, manholes catch-basins, septic tanks, cisterns or cesspools.

(4) **Permit**: A permit and fee shall be required for the construction and location of any such above round storage tanks as provided in Sections 27.051 - 27.053, inclusive of this code. In

addition to said requirements, no such permit shall be issued by the building inspector unless a permit therefore has been obtained form the Illinois State Fire Marshall, if required, and until the application and all required plans have been approved by the city Fire Marshall, and the proposed tank, vault and pad comply with the requirements of this Code.

(5) **Appeal**: Any person who is aggrieved by an order, ruling or decision or interpretation of the above provisions, by the Fire Marshall and/or Building Inspector may request appeal or review of such order, ruling, decision or interpretation, in the same manner provided for appeals under Article II (Fire Prevention) of Chapter 21 (Health Regulations) of this Code. In addition to the power and authorities therein provided, the Fire Chief shall have the power to grant a variance from the requirements of this Section, provided the general health, safety and welfare of the public is not endangered thereby.

(6) **Incorporation of other regulations**: The City clerk shall maintain on file in the office of the city Clerk, three (3) copies of the NFPA regulation or rule referred to above.

27.006 Gasoline containers must be red --- All receptacles used for the keeping or storing of gasoline, naphtha, benzine or benzol shall be painted red and no liquids other than gasoline, naphtha, benzine or benzol shall be placed in such container.

27.007 Empty drums --- Drums or barrels in which liquids of Classes I, II and III have been stored shall have tags, plugs, or bungs replaced immediately after package has been emptied and shall be promptly removed from the premises.

27.008 Use within building restricted --- The mixing, storing or handling of Class I and II liquids in open containers is prohibited in any building, except in the compounding of medicine and prescriptions in drug stores.

27.009 Pouring into sewers prohibited --- No liquids of Classes I, II and III or solutions containing such liquids, shall be poured into any sewer or any drain which is connected with a sewer system.

27.010 Storage in public buildings restricted --- No liquids of Class I or II shall be kept or stored in any schoolhouse, public hall or place of assembly, or in any public building, except for demonstrative purposes or for industrial or mechanical uses and then only under competent supervision.

27.011 Use in starting fires --- Flammable liquids shall not be used to start or kindle fires in stoves, furnaces or otherwise.

27.012 Fire to be kept away from flammable liquids --- Flammable liquids shall always be kept away from fire or open flame; fire or open flame shall always be kept away from flammable liquids.

27.013 Location of tanks - restricted classes of property --- No storage tank shall be within eighty-five (85) feet of any school, church, hospital or public hall. The distance shall be measured from the near edges or the tank in all directions to near point of buildings.

A public hall is any place which is used at any time for public meetings or the assembling of people for amusement, instruction or religious worship.

27.014 Location of tanks - property lines and buildings--- The minimum distance from individual tanks to line of adjoining property which is or may be built upon shall not be less than the following:

Tank capacity (gallons)	Minimum distance (feet)
2,000 or less	10
6,000 or less	20
21,000 or less	25
31,000 or less	30
45,000 or less	40
64,000 or less	50
80,000 or less	60
128,000 or less	75
200,000 or less	85
266,000 or less	100
400,000 or less	150
666,000 or less	250
1,333,000 or less	300
2,666,000 or less	350

In case of tanks for the storage of crude petroleum, the foregoing minimum distance shall be doubled.

These distances shall apply also to other buildings on the property except those necessarily connected with the installations (such as oil warehouse, pump house, and garage).

Location of tanks with reference to rail road tracks over which passenger trains are moved shall conform to the regulations of the Bureau of Explosives of the Association of American Railroads (formerly American Railroad Association) 30 Vesey Street, New York City.

When general oil storage is maintained in connection with a filling station, the distance from general storage tanks to filling station buildings, tanks and equipment shall be the same as that required to property lines.

27.015 Distance between tanks --- The minimum distance from tanks to adjacent tanks shall be as follows:

Tank capacity (gallons)	Minimum distance (feet)
300 or less	3
500 or less	3

1,000 or less	3
8,000 or less	3
12,000 or less	3
18,000 or less	3
24,000 or less	5
30,000 or less	10
48,000 or less	10
75,000 or less	13
100,000 or less	15
100,000 to 2,500,000	One tank diameter

If tanks are of different capacity, the capacity of the larger tank shall govern the distance to adjacent tanks.

27.016 <u>Construction of tanks - specifications</u> ---

(1) Tanks shall be covered with asphaltum or other non-rusting coating or paint.

(2) All pipe connections shall be made through flanges or reinforcements securely riveted, welded or bolted to the tank and shall be made tight.

(3) All openings shall be made liquid and vapor tight, except breather vents. Gaskets used shall be such as are not affected by heat or the contents of the tank.

(4) Covers for manholes, handholes and gauge holes shall be made tight fitting and normally kept in place.

27.017 <u>Normal vents in tanks</u> --- Each tank over one hundred gallons capacity shall have vent openings, except safety valves, provided with approved non-corrodible flame arresters so attached as to completely cover the openings.

Vent openings shall be in no case less than one-fourth inches in diameter, and where a power pump is used in filling tanks and a tight connection is made to fill pipe, vent shall not be smaller than fill pipe.

27.018 <u>Special safety or emergency vents in tanks</u> --- Additional vent openings or safety valves adequate to relieve any excessive pressure due to external heat shall be provided, of a type which shall be self-closing when pressure is relieved.

The total area of vents shall not be less than twenty-four square inches for tanks of 21,000 gallons capacity or less; and 21,000 gallons capacity.

27.019 <u>Setting of tanks</u> --- Tanks more than one foot above the ground shall have a firm foundation and supports of noncombustible materials, bases of which shall rest below the frost line.

Unprotected steel as a support for tanks shall not be permitted. No combustible materials shall be permitted under or within ten feet of any storage tanks except stairways to and walks on top which shall be incombustible.

27.020 <u>Grounding of tanks</u> --- All tanks shall be grounded electrically and effectively to permanent moisture.

27.021 <u>Piping material</u> --- All piping shall be standard full weight wrought iron or steel for working pressures less than one hundred pounds; for working pressure in excess of one hundred pounds, extra heavy pipe and fittings shall be used. No pipe less than one-half inch internal diameter will be permitted.

27.022 <u>Piping runs</u> --- Piping shall be run as directly as possible and proper allowance made for expansion and contraction.

27.023 <u>Piping above ground</u> --- Piping when above ground shall be protected against mechanical injury.

27.024 <u>Piping underground</u> ---

(1) Pipes shall not be surrounded or covered by cinders or other material of corrosive effect, but preferably should be laid in sand, and where carried in conduit, the opening of such conduit must be fully protected to prevent escape of liquid under dangerous conditions.

(2) Pipe lines buried on railroad property shall be laid at a depth of not less than three feet; where they pass under tracks they shall be laid at least four feet below the bottom of ties.

(3) Piping buried in city streets or other area where other pipe lines are carried shall be placed in conduit. Joint of conduit shall be sealed to prevent leakage and pitch shall be toward tank yard.

(4) Underground piping shall be coated with asphaltum or other corrosion-resisting materials.

27.025 <u>Joints in pipes</u> --- Joints may be gilded or of the ordinary screw type; if the screw type, they shall be made up with litharge and glycerine, lamp black or shellac.

27.026 <u>Tests of piping</u> --- Piping after installation shall be tested at a pressure fifty percent in excess of the working pressure and shall be proven tight. Tests shall continue thirty minutes.

27.027 <u>Normal valves in pipes</u> --- Each pipe attached to a tank shall be provided with a valve at the tank, with no branches or outlets between the tank and the valve.

In case two or more tanks are cross-connected, there shall be a valve at each cross-connection. Tanks with different classes of liquids shall not be cross-connected.

27.028 <u>Emergency internal check valves</u> --- In addition to normal valve, there shall be an extra valve at each pipe line, installed on the inside of the tank and operated by an effective heat-releasing device, which shall automatically prevent the flow of liquid from the tank in case of fire, even if pipe lines are broken from the tank.

27.029 <u>Dikes required</u> --- Embankments or dikes are required:

(1) For each tank containing crude oil or other liquid which has a tendency to boil over.

(2) For each individual tank exceeding 50,000 gallons (1,200 barrels) in capacity.

(3) For individual tanks of less than 50,000 gallons, or groups of tanks with individual tank capacity of less than 50,000 gallons, when installed on the bank of a stream or other body of water, or on land permitting of rapid drainage thereto.

27.030 Capacity of dikes --- Dikes shall have a capacity of not less than the capacity of the tank or group of tanks surrounded. Dikes surrounding tanks containing crude oil or other liquid which has a tendency to boil over shall have a capacity of not less than 125 percent of the capacity of the tank or group of tanks surrounded or shall have a suitable coping or deflector projecting inward, properly constructed to minimize the effect of a "boil over" wave.

27.031 Material and construction of dikes --- Dikes shall be constructed of earth, clay, masonry or reinforced concrete not higher than one-half the height of the tank or tanks enclosed, so constructed as to afford adequate protection.

Earthwork embankments shall be firmly and completely built of good earth or clay, free from stones, vegetable matter and other foreign material. They shall have a flat section at the top not less than two and one-half feet wide and a slope of at least 1 to 1 (45 degrees) on both sides.

Masonry or concrete dikes shall have footings below the frost line.

If a concrete floor covering is provided for the area enclosed by a concrete dike, a sump shall be provided at some convenient place, attached to which shall be a pump of approved design, so that any accumulation of water or oil may be removed immediately.

27.032 No openings in dikes permitted --- Embankments or dikes shall be continuous, without openings for piping or roadway.

27.033 Buildings - general requirements --- It shall be unlawful to store, or to sell, or offer for sale any flammable or volatile liquids as defined in this Article in an amount in excess of one gallon in any building or frame construction, or in any building other than a building of fireproof construction as defined in the Chapter 23 of this Code and amendments thereto of the city; provided that this Section shall not be construed to prohibit the storage of such liquids in the fuel tanks of automobiles or in tank, for heating systems installed in compliance with the provisions of the city ordinances.

27.034 Pumphouse --- Motor and pump or pumps shall be located in a separate, non-combustible building, not less than ten feet from tanks, warehouses, garage or property lines.

Motors shall be of the polyphase, non-sparking or explosion-proof type and shall be grounded to permanently moist earth.

If pump house is electrically lighted, lights shall be of the vapor-proof type, wiring shall be in sealed conduit, and the light switch shall be of the explosion-proof type or shall be placed outside the building.

Motor starting switches shall be of the explosion-proof type or oil bath type.

Screened openings of not less than sixty-four inches shall be construed in opposite corners as floor line to provide proper ventilation.

All doors of pumphouse shall open outward.

Doors shall be left open at all times when pumps are in operation

27.035 <u>Construction of warehouse</u> --- Warehouses shall be constructed so that refuse cannot accumulate under floor.

(1) Storage of liquids of Class I shall not be permitted in any building. Storage of liquids of Class I shall not be permitted except in original sealed containers and no transfer of such liquids in such containers to other containers shall ever be made inside the warehouse.

(2) Warehouse shall be kept clean, neat and orderly, and free from accumulation of grease and oil spillage.

(3) Electrical installation. The National Electrical Code shall govern the electrical installation.

27.036 <u>Garage - construction of</u> --- Floor of garage shall be of concrete or other non-combustible material, laid directly on the ground or on a well-tamped and puddled fill

(1) Adequate ventilation shall be provided to carry off any inflammable gases which may accumulate.

(2) No connection to any house drainage or to any sewer system shall be made from any garage waste basin, sink, floor drain or waste, unless an adequate grease trap is provided ahead of such connection. This does not apply to lavatories, toilets or wash basins, used exclusively for toilet or personal use, nor to downspouts carrying surface water from roof.

27.037 <u>Location of loading dock</u> --- Truck loading docks and platforms shall be located not less than ten feet from storage tanks, plant buildings and property lines.

27.038 <u>Electrical equipment</u> --- All electric lights at loading or unloading docks shall be of vapor-proof construction. Electric wiring shall be sealed conduit at docks and switches shall be of the explosion-proof type or placed at some point remote from the docks.

27.039 <u>Pumps and pipe lines</u> ---

(1) Gasoline and naphtha shall never be handled through the same pump and pipe lines as kerosene and fuel oils.

(2) Pipe line shall have a definite color scheme for painting to indicate the product which is being carried by the respective lines. The color red shall be for gasoline and naptha. Valves on lines in pumphouse shall be tagged to denote the product handled and controlled by each valve.

(3) Pumps delivering to or taking supply from tanks or tank cars shall be provided with valves on both suction and discharge pumps.

27.040 <u>Grounding</u> --- Before unloading operations are started and before any connection or contact is made with piping or other loading equipment, the tank car shall be electrically grounded, in an effective manner. Permanent electrical connection of not less than number 0 copper cable shall be made between the rails on which tank cars stand and the piping system of the storage plant. (NOTE) This connection may be accomplished in two ways. Rails may be bonded by means of standard rail bonds and connected to the permanent piping system with number 0 electric cable connections at each end of the loading or unloading section; or a similar connection may be made between each rail on which cars stand and the permanent piping system.

27.041 **<u>No unloading by gravity</u>** --- The withdrawal of liquids from tank cars through bottom outlets shall not be permitted. Tank cars shall be unloaded through dome (manhole) only. Pumps required to accomplish this shall be of adequate type and securely installed.

(1) **Exception**: Fuel oils may be unloaded by gravity.

(2) The use of compressed air to discharge contents of tank cars is prohibited, but this shall not be construed to prevent the use of a standard system employing an inert gas, such as carbon dioxide or nitrogen, as pressure generating medium for his purpose.

27.042 **<u>No unloading to portable containers</u>** --- Unloading from tank cars to tank trucks or to any portable containers shall not be permitted.

27.043 **<u>Dome covers</u>** ---- After unloading pipe is inserted into dome of tank car and before any pumping is done, dome shall be tightly covered with wet burlap or some other type of cover equally effective.

27.044 **<u>Other restrictions</u>** ---

(1) All connections between tank cars and pipe lines shall be in good condition and not permit leakage.

(2) Tank cars shall not be left connected to pipe lines except when loading or unloading is going on, and during all such time a competent man shall be present and in charge.

(3) The presence of flame lanterns, flame switch lights or other exposed flame lights or fires during the process of loading or unloading is prohibited.

(4) Siding used in connection with tank car unloading operations shall not be common to other users, or they shall be provided with necessary derails or with warning signs in accordance with Section 4, Paragraph 697(b) of the Interstate Commerce Commission Regulations on the Transportation of Explosives.

(5) The unloading of tank cars and all operations in connection therewith shall be in full accord with the rules and regulations of the Interstate Commerce Commission.

27.045 **<u>Grounding</u>** --- Before loading operations begin, tank trucks shall be electrically bonded to pipe lines by means of a bonding device at loading dock.

27.046 **<u>Fencing</u>** --- The area which embraces the tank yard, including dike and all above ground piping and pipe lines, shall be properly fenced with a metal fence.

27.047 **<u>Care and attendance</u>** ---

(1) Property shall be kept free from weeds, high grass, rubbish and litter, and shall be kept neat, clean and orderly throughout.

(2) Open light or flame shall not be permitted on the property.

27.048 **<u>Fire protection</u>** --- Approved chemical fire extinguishers, foam generators or other smothering agents for extinguishing oil fires shall be provided.

27.049 <u>No storage within building</u> --- Barrels and drums used for Class I liquids, whether full or empty, shall be stored in the open or on open platforms in plant yard. Platforms may have roofs but all sides shall be open.

(1) No open lights shall be permitted in such storage yard.

(2) Caps, bungs, and plugs shall be closed tightly immediately after container is emptied.

(3) Gasoline and naphtha shall be handled only in barrels or drums painted red and properly labeled and no other liquids shall be handled in such barrels or drums.

27.050 <u>Tanks, trucks and wagons</u> --- Tanks, tank trucks and wagons shall be constructed with double bulkheads.

Each compartment of tank shall be numbered and the same number shall appear on pipe line at rear of truck or wagon connected with that compartment.

A serviceable metal tag shall be fastened securely to each faucet, designating the contents of the compartment it controls by lettering not less than one-fourth inch high. Tags shall be painted according to the same color scheme as the pipe line, red always indicating gasoline or naphtha.

Faucets shall be of the self-closing type.

Heavy bumpers shall be provided across rear adequate to protect all faucets in case of a rear end collision.

Tanks, chassis, axles and springs shall be metallically connected and a drag chain shall be attached long enough to reach the ground at all times.

If buckets are used to deliver gasoline or naphtha, they shall be painted red and properly labeled. They shall be used for delivering gasoline and naphtha only, and gasoline and naphtha shall not be delivered in any other buckets.

No retail deliveries from tank trucks or tank wagons shall be permitted in any street or alley in the city nor on any highway outside the city.

Each tank truck or tank wagon shall carry an approved fire extinguisher suitable for extinguishing gasoline and oil fires, such as carbon tetra-chloride, carbon dioxide, foam or powder.

27.051 <u>Permits</u> --- It shall be unlawful to construct, install or enlarge any tank, pump or piping equipment for the storage or handling of flammable or volatile liquids such as defined in this Article without first having obtained a permit therefore. Applications for such permits shall be made to the Building Inspector and shall be accompanied by drawing to scale showing the location as well as plans showing the type and nature of installation or alteration.

27.052 <u>Approval</u> --- No such permit shall be issued until the Building Inspector has certified that the contemplated work fully complies with the ordinances of the city.

27.053 <u>Fees</u> --- The fee for such permits shall be:

(1) For installation of fuel oil tanks having a capacity of more than two thousand gallons and less than twenty thousand gallons $5.00.

(2) For installation of tanks for storage of gasoline having a capacity of less than ten thousand gallons $10.00.

(3) For installation of fuel oil tanks having a capacity of twenty thousand gallons or more $10.00.

(4) For installation of gasoline storage tanks having a capacity of 1,000 gallons or over $15.00

(5) For installation of tanks for other flammable liquids $10.00.

27.054 **Service stations** --- Notwithstanding any of the foregoing, an applicant for a permit to construct, install or enlarge any tank, pump or piping equipment for the storage or handling of flammable or volatile liquids in connection with or use by a service station as hereafter defined shall be deemed to have complied with the provisions of this Chapter if he shall first have obtained a permit from the State of Illinois therefore.

27.055 **Definition** --- A service station is any place of business where gasolines, or any highly volatile fuels for motor vehicles or internal combustion engines, are sold or offered for sale at retail, and dispensed into the fuel tanks of such motor vehicles.

27.056 **Penalty** --- Any person, firm or corporation who violates any of the provisions of this title shall, in addition to such other relief as the law may afford, be punishable is set forth in Chapter 32 of this Code.

CHAPTER 28

LIQUIFIED PETROLEUM GASES

Section 28.001 **Definition** --- The term “liquified petroleum gas", as used in this Chapter, shall be construed to include any material composed predominantly of propane, propylene, butane, (normal butane or iso-butane) and butylene or any mixture of them.

28.002 **Compliance - inspection** --- It shall be unlawful to produce, store or use liquified petroleum gas, or to install or maintain any equipment for such production or use, unless such production, storage and utilization equipment is constructed and maintained in compliance with the provisions of this Chapter.

It shall be the duty of the Fire Chief end Building Inspector, or such other officer or employee as may be designated by the Mayor to enforce the provisions of this Chapter and to make such inspections or tests as may be necessary in connection therewith. Whenever a test is necessary to determine whether any equipment or method complies with the standards prescribed, or referred to in this Chapter the enforcing official may accept the results of a test conducted by or under the supervision of the Underwriters Laboratories, Inc.

28.003 **Odorizing** --- All liquified petroleum gases used or stored in the municipality shall be effectively odorized by an agent of such character as to indicate by a distinctive odor the presence of gas in the air down to a concentration of one-fifth the lower limit of combustibility.

28.004 **Containers** --- All containers used for liquified petroleum gases shall be constructed to the standards prescribed therefore in the "Standards of the National Board of Fire Underwriters for the Storage of Liquified Petroleum Gases Bulletin of September, 1951" as published in pamphlet form by the National Board of Fire Underwriters, hereinafter referred to as N.B.F.U. pamphlet No. 58.

The maximum filling density (the percent ratio of the weight of gas in a container to the weight of water the container will hold at 60 degrees F.) shall be that prescribed in a paragraph B.11 (page 16) of N.B.F.U. pamphlet No. 58.

No such container for use in connection with any building, shall be located between the building and the street upon which the building abuts, nor within such building. The installation of such containers and location with reference to buildings, shall be in accordance with the standards prescribed in the National Board of Fire Underwriters Pamphlet No. 58.

28.005 **Equipment** --- No such equipment shall be installed or used unless it complies with the standard therefore established in the N.B.F.U. pamphlet No. 58.

28.006 **Production** --- It shall be unlawful to operate a plant for the production of liquified petroleum gases, or for filling containers with such gases, in the municipality unless such activity is in full compliance with the standards prescribed in N.B.F.U. pamphlet No. 58; and it shall be unlawful to conduct or operate such activity unless all buildings and equipment used in connection therewith comply with the standards prescribed in that bulletin.

28.007 **Storage** --- It shall be unlawful to engage in the business of storing liquified petroleum gases in the municipality unless the premises and equipment thereon to be used in such activity are in full compliance with the standards prescribed in the N.B.F.U. pamphlet No. 58; and it shall

be unlawful to conduct or operate such activity unless all buildings and equipment used in connection therewith comply with the standards prescribed in that bulletin.

28.008 **Regulations on storage** --- No liquified petroleum gases shall be stored in the municipality except in compliance with the standards prescribed in N.B.F.U. pamphlet No. 58 of September, 1951.

28.009 **Copies of N.B.F.U.** --- The clerk shall keep on hand copies of the N.B.F.U. pamphlet herein referred to for inspection and distribution without charge to any interested persons.

28.010 **Penalty** --- Any person, firm or corporation who violates any of the provisions of this title shall, in addition to such other relief as the law may afford, be punishable as set forth in Chapter 32 of this Code.

CHAPTER 29
ZONING

ARTICLE I	**THE CITY AND ALL CONTIGUOUS UNINCORPORATED TERRITORY WITHIN ONE AND ONE-HALF MILES OF THE QUINCY CORPORATE LIMITS IS DIVIDED INTO DISTRICTS**
ARTICLE II	**USE OF PREMISES IN THE CITY AND ALL CONTIGUOUS UNINCOPORATED TERRITORY WITHIN ONE AND ONE-HALF MILES OF THE QUINCY CORPORATE LIMITS IS REGULATED**
ARTICLE III	**MAXIMUM HEIGHT LIMITS ARE ESTABLISHED**
ARTICLE IV	**MINIMUM YARDS ARE ESTABLISHED**
ARTICLE V	**MINIMUM LOT AREAS AND WIDTHS ARE ESTABLISHED**
ARTICLE VI	**OFF-STREET PARKING SPACES AND LOADING**
ARTICLE VII	**ACCESSORY USES AND BUILDING AND LOADING**
ARTICLE VIII	**NON-CONFORMING USES**
ARTICLE IX	**PLANNED DEVELOPMENT**
ARTICLE X	**LANDMARKS AND HISTORIC PLACES**
ARTICLE XI	**PERMITS**
ARTICLE XII	**AMENDMENTS AND CHANGES**
ARTICLE XIII	**VIOLATIONS AND PENALTY**
ARTICLE XIV	**SIGNS**
ARTICLE XV	**SITE PLAN REVIEW**

ARTICLE I THE CITY AND ALL CONTIGUOUS UNINCORPORATED TERRITORY WITHIN ONE AND ONE-HALF MILES OF THE QUINCY CORPORATE LIMITS IS DIVIDED INTO DISTRICTS

Section 29.101 **Definitions** --- All definitions provided in this Chapter or in this Code shall apply for all purposes of this Chapter, wherever set forth, except as the context may otherwise require. If regulatory provisions are incorporated in definitions, such definitions shall themselves be considered as imposing regulations. The following definitions are specifically prescribed:

Adult uses: The following specified uses shall be included within the term "adult uses":

Adult book stores: An establishment having as a substantial portion of its stock in trade, books, magazines, films for sale or viewing on the premises by use of motion picture devices or any other coin-operated means, and other periodicals which are distinguished, characterized, represented or advertised by or based on their emphasis on matter depicting, describing or relating to "specified sexual activities" or "specified anatomical areas" or an establishment with a segment or section devoted to the sale or display of such material. Without limiting the scope of this definition, establishments advertising films rated as "XXX" will be considered an adult book store.

Adult entertainment cabaret: A public or private establishment which serves food and/or alcoholic beverages and features or has, whether regularly or irregularly topless, nude or semi-nude dancers, strippers, male or female impersonators, or similar entertainers.

Adult mini motion picture theatre: An enclosed building with a capacity for less than fifty (50) persons used for presenting material distinguished, characterized, represented or advertised by or based on an emphasis on matter depicting, describing or relating to "specified sexual activities" or "specified anatomical areas", for observation by patrons therein. Without limiting the scope of this definition, establishments advertising films rated as "XXX" will be considered an adult mini motion picture theatre.

Adult motion picture theatre: An enclosed building with a capacity of fifty (50) or more persons used regularly and routinely for presenting motion pictures having as a dominant theme material distinguished, characterized, represented or advertised by or based on an emphasis on matter depicting, describing or relating to "specified sexual activities" or "specified anatomical areas" for observation by patrons therein. Without limiting the scope if this definition, establishments advertising films rated as "XXX" will be considered an adult motion picture theatre.

Alley: Land devoted to secondary access to lots. Frontage on an alley shall not be considered as satisfying any requirements related to frontage on a street.

Bed and breakfast operation: A use which is subordinate to the principal use of a dwelling unit as a single family unit and in which transient guests are provided a sleeping room and board in return for payment.

Body shop or model studio: Any public or private establishment which describes itself as a body shop or model studio, or where for any form of consideration or gratuity, figure models who display "specified anatomical areas" are provided to be observed, sketched, drawn, painted, sculptured, photographed or similarly depicted by persons paying such consideration or gratuity, or where for any form of consideration or gratuity, nude and semi-nude dancing, readings, counseling sessions, body painting and other activities that present materials distinguished or characterized by an emphasis on matter depicting, describing or relating to "specified sexual

activities" or "specified anatomical areas" are provided for observations by or communication to persons paying such consideration or gratuity.

Board: The Board of Zoning Appeals established in Article VII of Chapter 11 of this Code.

Build: To erect, convert, enlarge, reconstruct, structurally alter, or otherwise materially change a building or structure.

Building or structure: Any structure with substantial walls and roof securely affixed to the land and entirely separated on all sides from any other structure by space or by walls in which there are no communicating doors, windows or openings built for use of persons or animals, whether as shelter, storage or otherwise. Structure means anything built that requires a permanent location.

Camp grounds: Any area or tract of land used to accommodate two or more camping parties, including cabins, tents, house trailers or other camping outfits.

Church: A building, together with its accessory buildings and uses, where persons regularly assemble for religious worship, and which building, together with its accessory buildings and uses, is maintained and controlled by a not-for-profit religious body organized to sustain public worship. An accessory use may include, but shall not be limited to a nursery, prekindergarten, kindergarten, play, special and other private schools, or a day care center.

City: Quincy, Adams County, Illinois.

Clinic: An establishment occupied by one or more members or a medical, dental or other healing profession.

Club: Any not-for-profit organization whose premises, whether owned or leased by said organization, are restricted to its members and their guests and are used for its own not-for-profit purposes and not for unrelated purposes.

Commission: Plan Commission established in Article V of Chapter 11 of this Code.

Council: City Council of Quincy, Adams County, Illinois.

District: A part of the city or of the contiguous unincorporated territory within one and one-half miles of the Quincy corporate limits wherein regulations of this Article are uniform.

District map: The map referred to in Section 29.102(3). The term district map may also include zoning map, official zoning map, or other words of similar importance indicating a reference to such map.

Dwelling: A building or structure used entirely for residential purposes. A dwelling may involve (without limiting the same) modular housing or prefabricated housing, but shall not include hotels, motels, lodging houses, boarding houses, group homes or halfway houses or similar housing. A single-family dwelling is a dwelling that contains only one living unit; a two-family dwelling is a dwelling that contains only two living units and a multiple dwelling is a dwelling that contains more than two living units.

Family: Family as used herein shall include any one of the following:

(1) An individual, or two or more persons related by blood, marriage or adoption, living together as a single housekeeping unit; or,

(2) A group of two or more persons, all of whom are related by blood, marriage or adoption, except that the group may include one person not so related, living together as a single housekeeping unit; or,

(3) A group of two (2) or more persons all of whom are related by blood, marriage or adoption, except the group may include up to eight (8) persons up to eighteen (18) years of age

not so related who have been placed in the housekeeping unit either pursuant to and as approved by Court Order or, alternatively, by the Department of Child and Family Services or a Child Welfare Agent duly licensed as such by the State of Illinois, pursuant to and in accordance with the Illinois Child Care Act of 1969, as from time to time amended, living together as a single housekeeping unit; or,

(4) A group of up to four persons over eighteen (18) years of age (who may or may not be related) who have been placed in the single housekeeping unit by an agency licensed under the Community Integrated Living Arrangement Act of 1987, as from time to time amended, except that the group may additionally include an unrelated person providing personal care assistance or supervision to said group. "Related" for the purpose of this definition means any of the following relationships by blood, marriage or adoption: Parent, grandparent, great-grandparent, descendant, step-descendant; great-uncle, great-aunt, brother, sister, step-parent, step-brother, step-sister, uncle, aunt, nephew, niece or first cousin.

Farm: An area used for the growing of the usual farm products such as vegetables, fruit, trees and grain and their storage on the area as well as for the raising thereon of the usual farm poultry and farm animals such as horses, cattle, sheep and swine. The term "farm" includes the operating of such an area for one or more of the above uses including, among others, dairy farms with the necessary accessory uses for treating, storing or processing the milk or other produce; provided, however, that the operation of and such accessory uses shall be secondary to that of the normal farming activities. A farm does not include intensive livestock raising such as commercial feed lots or large batteries of rabbit hutches on farms of less than forty (40) acres, nor does it include feeding or disposal of garbage or rubbish. Residential structures occupied by persons primarily engaged in farming are included in the term "farm".

Garage, public: A building or portion thereof used for the housing of motor vehicles or where such vehicles are equipped for operation, repaired or kept for renumeration hire or sale, not including exhibition or showrooms for model cars.

Hotel: A building not consisting of living units and occupied by more than twenty (20) persons.

Institution: A not-for-profit establishment for public use.

Interested party: The record title owner, or the representative thereof, of each property within 250’ in each direction of the boundary line of the property subject to the requested zoning action. The number of feet occupied by all public roads, streets, alley or other public ways shall be excluded in computing the 250’ requirement; provided further that in no event shall this requirement exceed 400’, including public streets, alleys and other public ways.

Live or legitimate theater: A place where drama is performed on a stage as opposed to other media, such as motion pictures or television.

Living unit: The room or rooms occupied by a family. The living unit must include a separate kitchen and toilet and related facilities.

Lodging house: A dwelling consisting of not more than one living unit occupied by not more than twenty (20) persons not related by blood, marriage or adoption. This term includes rooming house, boarding house, tourist home, group homes or half-way houses, and sleeping rooms.

Lot: A parcel of land adequate for occupancy by a use herein permitted providing the yards, area and off-street parking herein required and fronting directly upon a street.

Lot of record: A lot for which a deed has been duly recorded in the office of the Recorder of Adams County, Illinois, at the effective date of any past, present or future zoning regulations, as may be applicable at the time or recordation. A lot of record which shall subsequently become a part of a subsequent lot of record shall continue to be subject to all regulations applicable to it at the time such lot of record was originally established or those thereafter established. The combining of lots of record through a subsequent deed shall not alter the regulations which would otherwise be applicable.

Lots, zoning: A tract of land which at the time of applying for a building permit (or, if no building permit is required, at the time of use of identification of a proposed use) is designated (or is in fact used or proposed to be used) by its owner, developer, occupant or other appropriate person, as a tract of land all of which is to be used (or is used or proposed to be used), developed or built upon as a unit under a single ownership.

Massage establishment: Any establishment having a fixed place of business where any person, firm, association or corporation engages in, or carries on, or permits to be engaged in or carried on, any of the activities mentioned in the definition of "massage", including but not limited to massage establishments licensed pursuant to Chapter 19 of the Municipal Code of the City of Quincy. For purposes of the above adult uses, the following special definitions shall apply:

Massage: Any method of pressure on or friction against or stroking, kneading, rubbing, tapping, pounding, vibrating or stimulating of the external soft parts of the body with the hands or other parts of the human body or with the aid of any mechanical or electrical apparatus or appliance with or without such supplementary aids as rubbing alcohol, liniments, antiseptics, oils, powder, creams, lotions, ointments or other similar preparations commonly used in this practice.

Specified anatomical areas: Any one or more of the following conditions:

(1) Less than completely, and opaquely covered:

(a) Human genitals, pubic region or pubic hair; or

(b) Buttock; or

(c) Female breast below a point immediately above the top of the areola; or,

(d) Human male genitals in a discernibly turgid state, even if completely opaquely covered.

Specified sexual activities: Any one or more of the following conditions:

(1) Human genitals in a state of sexual stimulation or arousal; or,

(2) Acts or representations of acts of human masturbation, sexual intercourse or sodomy, beastiality, oral copulation or flagellation; or,

(3) Fondling or erotic touching of human genitals, pubic region, buttock or female breast; or,

(4) Excretory functions as part of or in connection with any activities set forth in (1) through (3) above.

Mobile homes: A factory-assembled, movable dwelling designed and constructed to be towed on its own chassis, comprised of frame and wheels, whether temporary or permanent, to be used without a permanent foundation, and distinguishable from other types of dwellings in that the standards to which it is built include provisions for its mobility on that chassis. A mobile home shall be considered a mobile home despite the fact that it is subsequently modified so as

not to conform exactly to the above stated definition. Such modification may include, but shall not be limited to, modifying the mobile home for use as an office rather than a dwelling or modifying the mobile home so that it is no longer movable (such as by removing the wheels). A mobile home shall further be considered a mobile home despite the fact that it is placed on a permanent or semi-permanent foundation or that it satisfies usual building requirements for standard construction. The term mobile home shall include the term trailer or other description of the same. Modular housing and prefabricated housing may be considered a mobile home as provided in the definition of those terms. It is the intent of this ordinance that all single-wide structures be considered mobile homes whether they might otherwise be said to constitute modular housing or prefabricated housing. All mobile homes shall be located in mobile home parks or mobile home subdivisions.

Mobile Home Park: An area of land under one ownership where designated spaces for mobile homes are rented. The term mobile home park includes the term trailer camp.

Mobile home subdivision: An area of land similar to a mobile home park, but with spaces or lots primarily reserved for sale to individual owners as residential sites for mobile homes.

Modular housing: A dwelling made up of several pieces, consisting of standard "modules" transported to or constructed at the site and generally not distinguishable from conventional permanent housing. Although otherwise qualifying as modular housing, modular housing shall be considered a mobile home if less than fifteen (15) feet in width or thirty-two (32) feet in length or if the modular housing is what would normally be considered the equivalent of a single-wide mobile home. A mobile home shall not be considered modular housing. Modular housing (as distinguished from a mobile home) must comply with all applicable building, plumbing and electrical codes adopted and incorporated in the Municipal Code.

Motel: An inn or group of cabins designed for occupancy by paying guests.

Prefabricated housing: A dwelling consisting mostly or entirely of component parts manufactured at a factory, transported by trailer or truck to a building site, and there constructed and assembled on a permanent foundation. Although otherwise qualifying as prefabricated housing, prefabricated housing shall be considered a mobile home if less than fifteen (15) feet in width or thirty-two (32) feet in length or if the prefabricated housing is what would normally be considered the equivalent of a single-wide mobile home. A mobile home shall not be considered prefabricated housing. Prefabricated housing (as distinguished from a mobile home) must comply with all applicable building, plumbing and electrical codes adopted and incorporated in the Municipal Code.

Premises: Land together with any buildings or structures occupying it.

Sign: See Section 29.1403 of this Code.

Sign, banjo: See Section 29.1403 of this Code.

Street: If Article VII of Chapter 13 of this Code does not apply, the City Engineer may approve other means of access as a street for purposes hereof, provided that provisions are made for access, public utilities and other general or similar needs not only for the orderly development of the specific zoning lot in question but also of adjoining areas or zoning lots. The City Engineer may require, as a condition of approval, that street options on easements be granted, or impose other reasonable conditions, to assure suitable development of the entire area and for adjoining areas and zoning lots.

Tower: Unless otherwise provided, the term tower shall include television, radio or any other form of communications tower or other structures whose elevation is designed for emitting or receiving signals.

Use: Any purpose for which a building or other structure or a tract of land may be designed, arranged, intended, maintained or occupied; or, any activity, occupation, business or operation carried on, or intended to be carried on, in a building or other structure or on a tract of land.

Warehouse: A structure or part of a structure, for storing goods, wares and merchandise, whether for the owner or for others, whether it is a public or private warehouse.

For other applicable definitions, see the following, among others, sections;

Height: see Section 29.301
Yards: see Section 29.401
Parking: see Section 29.601
Accessory uses: see Section 29.701
Non-conforming uses: see Section 29.801(2)

29.102 <u>Districts established</u>:

(1) The city and the continuous unincorporated territory within one and one-half miles of the Quincy corporate limits are divided into seven (7) types of districts:

RU Districts	-	Rural
RE Districts	-	Resort
R Districts	-	Residential
NR Districts	-	Neighborhood Residential
C Districts	-	Commercial
D Districts	-	Downtown
M Districts	-	Industrial

(2) The seven (7) types of districts are further divided into the following specific districts:

RU1	-	Rural District
RE1	-	Resort District
RS	-	Single-Family District
R1A	-	Single-Family District
R1B	-	Single-Family District
R1C	-	Single-Family District
R2	-	Two-Family District
R3	-	Multi-Family District
NR1	-	Neighborhood Residential District
NR2	-	Neighborhood Residential District
C1A	-	Limited Local Commercial District
C1B	-	Limited Local Commercial District
C2	-	Commercial District
C3	-	Planned Commercial District
D1	-	Downtown Retail District

D2 - Downtown General Business District
D3 - Downtown Riverfront District
D4 - Downtown Office and Medical Facility District
D5 - Downtown Industrial District
M1 - Light Industrial District
M2 - Heavy Industrial District
M3 - Planned Industrial District

(3) In addition to the specific districts, property may also acquire the following identifiers:

L - Landmark
H - Historic District

These additional identifiers shall be appended to the specific district of properties designated by ordinance as being Landmarks or within the boundaries of an Historic District as provided for in Article X of this Chapter. Such additional identification is only designed to grant the various protections afforded by Article X and, unless otherwise specified, is not intended to remove any requirement that the property otherwise comply with the zoning regulations and other ordinances of the City of Quincy.

(4) **District map**: The boundaries of the districts are as shown on the "The City of Quincy Zoning District Map" compiled September 18, 1998, as amended from time to time, which shall be maintained by the secretary of the Quincy Plan Commission and, for this purpose only, the secretary of the City of Quincy Plan Commission shall be considered a Deputy City Clerk. Upon adoption or amendment of a specific zoning district, the map shall be revised by the Plan Commission secretary or by such other personnel as the Director of Planning and Development may designate. The map shall be maintained as part of the geographic imaging system of the City of Quincy and copies shall be made available to the public upon payment of a fee in the amount which shall offset the costs of copying and publishing the official map. Such map as maintained hereunder shall be the final authority as to the current zoning status of lands and buildings, subject to such amendments then in effect.

(5) **Interpretation of map**: Where uncertainty exists as to the boundaries of districts as shown on the district map, the following rules shall apply:

(a) Boundaries are the centerline of highways, expressways, streets or alleys, unless otherwise indicated.

(b) Boundaries are platted tracts on lot lines, unless otherwise indicated.

(c) Boundaries indicated as following railroad lines shall be construed to be midway between the main track.

(d) All territory in the unincorporated area hereafter coming under the zoning jurisdiction of the City of Quincy shall be and the same is hereby classified for zoning purposes as RU1 - Rural, until otherwise reclassified by amendment.

(e) Whenever the Council or other authority vacates a street or alley, adjacent districts shall extend to the centerline of the vacation.

(6) **Changes**: If, by amendment to these provisions, any change made in any district boundary or in any other matter shown on the district map, such change shall be indicated on the map promptly after the amendment is adopted by the secretary of the Plan Commission.

29.103 <u>Intent and purpose</u> --- The intent and purpose of these provisions include, but are not limited to:

(1) Promoting and protecting the public health, safety, morals, comfort, and general welfare of the city;

(2) Providing adequate light and air;

(3) Encouraging the most appropriate use of land throughout the city;

(4) Conserving and enhancing the taxable value of land and buildings;

(5) Preventing the overcrowding of land;

(6) Avoiding undue concentration of population;

(7) Fostering a more rational pattern of land use relationship between residential and non-residential uses;

(8) Protecting residential and non-residential areas from harmful encroachments by incompatible uses;

(9) Preventing such additions to and alterations of remodeling of existing buildings or structures as would not comply with the restrictions and limitations imposed hereunder;

(10) Lessening congestion on the public streets;

(1l) Preserving and increasing the amenities of the city;

(12) Providing for the gradual elimination of non-conforming uses of land, building and structures which are adversely affecting the character and value of desirable development in each district;

(13) Protecting the air, water and land resources of the city from the hazards of pollution;

(14) Preserving and maintaining the essential character of the city and existing amenities;

(15) Preserving and protecting buildings, groups of buildings, neighborhoods and communities of distinguished architectural character and appearance;

(16) Providing for the orderly and functional arrangement of land uses and buildings;

(17) Establishing standards for the orderly development or redevelopment of neighborhoods, or functional and geographic parts of neighborhoods;

(18) Securing for the public adequate locations for housing, employment, shopping, education and recreation;

(19) Facilitating the adequate provision of transportation, utility systems, schools, parks and other public requirements;

(20) Providing for orderly sequences of growth in neighborhoods and the community;

(21) Promoting the economic diversity of the community and to enhance opportunities for participation in the economic and social system of the community;

(22) Encouraging the construction and maintenance of a full range of housing opportunities;

(23) Establishing a comprehensive land use regulation ordinance to serve the City of Quincy and the unincorporated territory within one and one-half miles of the corporate limits, based upon the community's development plans and overall city policies and objectives; and

(24) To exercise the full power and authority granted it under the Constitution of the State of Illinois and all applicable laws of said state or the United States as they pertain to zoning.

29.104 <u>General provisions</u> ---

(1) **Interpretation**:

(a) **Minimum requirements**: The provisions herein shall be held to be the minimum requirements for the promotion of the public health, safety, morals and welfare. Except as provided in paragraphs (7) and (9) of Section 29.403 and Section 29.701 et seq. relating to accessory buildings, there shall not be more than one (1) building or structure on one lot.

(b) **Relationship with other laws**: The provisions herein regulating uses of property shall not be construed to allow violation of any other applicable law, ordinance, resolution, rule or regulation. Where the conditions imposed by any provisions herein upon the use of land or buildings or upon the bulk of buildings are either more restrictive or less restrictive than comparable conditions imposed by any other provision herein or any other law, ordinance, resolution, rule or regulation of any kind, the regulations which are more restrictive or which impose higher standards or requirements shall govern. The title and interpretation provisions of Article I of Chapter 33, generally applicable to this Code, are specifically made applicable to this Chapter as if fully set forth herein.

(c) **Effect on existing agreements**: These provisions are not intended to abrogate any easement, covenant or any other private agreement provided that where the regulations hereof are more restrictive or impose higher standards or requirements than such easement, covenants or other private agreements, the requirements herein shall govern.

(2) **Use and bulk regulations**: No building, structure or land shall hereafter be used or occupied, and no building or part thereof, or other structure shall be erected, raised, moved, reconstructed, extended, enlarged or altered, except in conformity with the regulations herein specified for the district in which it is located.

(3) **Lot coverage**:

(a) **Maintenance of yards, courts and other open spaces**: The maintenance of yards, courts and other open spaces and minimum lot area legally required for a building shall be a continuing obligation of the owner or the owner's successor in title of such building or of the property on which it is located, as long as the building is in existence. Furthermore, no legally required yards, courts or other open space or minimum lot area allocated to any building shall, by virtue of change of ownership or for any other reason, be used to satisfy yard, court, other open space or minimum lot area requirements for any other building. Yards, parking space or lot area required for one building cannot be used for another building.

(b) **Division of zoning lots**: No improved zoning lot shall hereafter be divided into two (2) or more zoning lots unless all improved zoning lots resulting from each such division shall conform with all the applicable regulations of the zoning district in which the property is located. The size of a lot may not be reduced below the requirements of this Chapter.

(4) **Frontage**: All buildings and uses established on or after the effective date hereof must front on a street.

(5) **Lot**: Every building or structure must be built on a lot. Except as provided in subsections (7) and (9) of Section 29.403 and Article VII, there cannot be more than one building or structure on one lot.

ARTICLE II USE OF PREMISES IN THE CITY AND ALL CONTIGUOUS UNINCORPORATED TERRITORY WITHIN ONE AND ONE-HALF MILES OF THE QUINCY CORPORATE LIMITS IS REGULATED

Section 29.201 **Generally** --- The use of premises in the city and all contiguous unincorporated territory within one and one-half miles of the city's corporate limits are subject to the use restrictions herein set forth. Unless the context shall otherwise require, all headings contained in this Article II, such as "residential uses" and "recreational and social facilities" are for convenience only and shall not be construed as necessarily allowing any and all uses of such general description in the particular zoning district involved irrespective of whether specified in the list of permitted uses under such category.

29.202 **Premises in the city and in the contiguous unincorporated territory within one and one-half miles of the Quincy corporate limits shall be used for the following purposes** ---

(1) **RU1 district (rural district)**: In the RU1 district only the following uses are permitted:

RESIDENTIAL:

- Single-family dwelling

RECREATIONAL AND SOCIAL FACILITIES:

- Bike trails
- Country clubs (private), including club houses, golf courses, driving ranges, tennis courts, swimming pools and other recreational facilities
- Parks
- Playgrounds
- Private clubs, except skeet and gun clubs, provided that the chief activity of such club shall not be a service customarily carried on as a business, and provided further that such club's facilities or grounds shall not be leased out for use by others or for purposes not directly and materially related to such club.
- Riding stables and riding paths, provided that any building or enclosure housing animals shall be located at least 150’ from all property lines.

AGRICULTURAL USES:

- Farms, provided that no farm shall be operated either publicly or privately for the feeding or disposal of garbage, rubbish or offal and provided further that any structure or enclosure for the shelter of livestock or poultry shall be located not less than 150’ from any street or lot line.
- Grain elevators and similar storage structures including buildings for temporary storage of grain.
- Greenhouses
- Nurseries
- Roadside stands offering for sale only farm products which are produced upon the premises, and which stands shall be removed during any period when they are not in use.

- Truck gardens

RELIGIOUS USES:
- Churches
- Convents, monasteries, rectories and similar religious institutions.

EDUCATIONAL USES:
- Private schools with curriculum similar to public schools, but not business, trade or commercial schools.
- Public schools

MISCELLANEOUS:
- Hospitals and institutions of a not-for-profit educational, religious, charitable or philanthropic nature; provided, however, that such buildings shall not be located upon sites containing an area of less than five (5) acres, they may not occupy over 20% of the total area of the lot, and the buildings shall be set back from all yard lines a distance of not less than 2' for each foot of building height.
- Kennels
- Railroad tracks, but not including yards and similar facilities.
- Towers less than 50' in height located on the subject property not less than the tower height (plus five additional feet) from the nearest adjacent property line.
- Veterinary hospitals

(2) **RE1 district (resort district)**: In the RE1 district only the following uses are permitted:

RESIDENTIAL USES:
- Residential uses permitted in the RU1 district
- Summer homes and cabins which need not front upon a street or place.

RECREATIONAL AND SOCIAL FACILITIES:
- Recreational and social facilities permitted in the RU1 district
- Bathing beaches and bath houses, provided appropriate approval has been received from all applicable authorities.
- Boating docks
- Marinas, providing for the sale or rental of boats, boating equipment and gas and oil for the boats.
- Sale or leasing of fishing equipment and bait

AGRICULTURAL USES:
- Agricultural uses permitted in the RU1 district

MISCELLANEOUS:
- Emergency equipment storage buildings

(3) **RS, R1A, R1B, and R1C district (single family districts)**: In the RS, R1A, R1B and R1C districts, only the following uses are permitted:

RESIDENTIAL USES:

- Single-family dwellings

RECREATIONAL AND SOCIAL FACILITIES:

- Country clubs (private), including golf courses, driving ranges, tennis courts, swimming pools, and other recreational facilities.
- Golf courses and accessory club houses except miniature or practice driving tees and lighted courses, provided no accessory club house is located nearer than150' to the side or rear of lot lines.
- Parks
- Playgrounds
- Towers less than 35' in height and located on the subject property not less than the tower height (plus five additional feet) from the nearest adjacent property line.

EDUCATIONAL INSTITUTIONS:

- Educational uses permitted in the RU1 district

PUBLIC AND GOVERNMENTAL LAND AND BUILDINGS:

- Public libraries
- Community buildings, when publicly owned and operated, provided that such buildings are of standard construction.

(4) **R2 district (two-family district)**: In the R2 district there may be any uses permitted in RS, R1A, R1B and R1C districts and, additionally, the following:

RESIDENTIAL USES:

- Two-family dwellings

(5) **R3 district (multi-family district)** In the R3 district, there may be any uses permitted in the R2 district and, additionally, the following:

RESIDENTIAL USES:

- Boarding houses
- Group homes or half-way houses
- Lodging houses
- Multiple dwellings
- Rooming houses
- Sleeping rooms
- Tourist homes

RECREATIONAL AND SOCIAL FACILITIES:

- Private clubs, except skeet and gun clubs, fraternities, sororities and lodges, provided that the chief activity of such club shall not be a service customarily carried on as a business, and provided further that such club's facilities or grounds shall not a leased out for use by others or for purposes not directly and materially related to such club.

HEALTH, MEDICAL & OTHER CHARITABLE INSTITUTIONS:

- Hospital (but not animal hospitals or animal clinics)
- Not-for-profit charitable, educational, religious or philanthropic institutions (but not institutions used primarily for penal or mental treatment).
- Nursing, convalescent or rest home,

(6) **NR districts (Neighborhood Residential Districts)**:

(a) **Purpose**: The NR1 (Neighborhood Residential 1) and NR2 (Neighborhood Residential 2) districts are established as general residential districts which provide for a wide variety of dwelling accommodations. The NR2 district, additionally, allows selected commercial uses. These districts are considered particularly appropriate for, but are not limited to, undeveloped areas of multiple acres intended for residential use, for deteriorating residential areas and for areas of transition between nonresidential areas and single-family areas.

(b) **Permitted uses**: In the NR1 district, only the following permitted uses are allowed:

RESIDENTIAL USES:

- Single-family dwellings
- Two-family dwellings
- Multiple dwellings not exceeding 6 units in any individual multiple dwelling.

In the NR2 district, the following permitted uses are allowed in addition to those permitted in NR1 district, provided, that the sale of alcoholic beverages shall not be permitted (except by special permit):

RESIDENTIAL USES:

- Group homes or half-way houses
- Multiple dwellings regardless of the number of units

SALE OF GOODS & PRODUCTS PRIMARILY AT RETAIL AS FOLLOWS (AND NONE OTHERS):

- Bakeries, provided that not more than five persons are employed or utilized (in any capacity) on the premises at any one time.
- Book and stationery stores
- Business machine sales and service
- Camera and photographic supply stores
- Candy and confectionery stores
- Catalog stores

- Coin, philatelic, stamp and numismatic stores
- Dairy products stores
- Delicatessens
- Drug stores and pharmacies
- Dry goods stores
- Florist shops
- Food stores, grocery stores, meat markets, fish markets.
- Gift shops
- Haberdasheries
- Hobby shops
- Ice and milk shops
- Ice cream stores
- Jewelry stores
- Leather goods and luggage stores
- Millinery shops
- Musical instrument sales and repair
- Newsstand
- Notion store
- Office supply stores and repair of office equipment, provided such repair is clearly secondary to the primary use.
- Orthopedic and medical appliance stores, but not including the assembly or manufacture of such articles.
- Phonograph records, tape and sheet music stores
- Radio and television sales and service, providing any repair service is clearly secondary to the primary use.
- Radio and television service, provided that not more than five persons are employed or utilized (in any capacity) on the premises at any one time
- Restaurants
- School supply stores
- Shoe stores

SERVICE USES AS FOLLOWS (AND NONE OTHERS):

- Artist's studios
- Barber shops
- Beauty parlors
- Blueprinting and Photostatting establishments
- Clothes pressing establishments, provided that not more than ten persons are employed or utilized (in any capacity) on the premises at any one time.
- Credit unions
- Dry cleaners and laundries including drive-in facilities, provided that not more than ten persons are employed or utilized (in any capacity) on the premises at any one time.
- Locksmith shops
- Photographic studios

- Telegraph offices

EDUCATIONAL INSTITUTIONS AS FOLLOWS (AND NONE OTHERS):
- Dance schools
- Dance studios
- Music studios

HEALTH, MEDICAL & CARE INSTITUTIONS AS FOLLOWS (AND NONE OTHERS):
- Chiropodist's offices
- Chiropractor's offices
- Dental clinics
- Medical clinics
- Dentist's offices
- Doctor's, surgeon's and physician's offices
- Optician's offices
- Osteopath's offices
- Podiatrist’s offices

OFFICES INVOLVING NO RETAIL SALES INCLUDING BUT LIMITED TO:
- Accountant's offices
- Architect's offices
- Attorney's or law offices
- Auditor's offices
- Bookkeeping service offices
- Business and professional offices, miscellaneous
- Chamber of Commerce offices
- Detective agencies
- Security service offices
- Employment agencies
- Engineer's offices
- Insurance agencies
- Labor unions and organization offices
- Land surveyor's offices
- Merchant's associations
- Not-for-profit organization offices
- Political organization offices
- Real estate offices
- Regional sales offices
- Secretarial services offices
- Security and commodity broker offices

(c) **Special uses**: No special permit shall be granted pursuant to Section 29.203 or planned developments approved pursuant to Article IX for NR1 and NR2 districts, except for the following in the NR1 or NR2 districts:

- Nursery, prekindergarten, kindergarten play, special and other private schools, and day care centers providing care for eight or more children.
- Hospitals and nursing homes, educational, religious and philanthropic institutions and senior citizens public housing, public welfare facilities.
- Waste stabilization pond (lagoon)
- Boarding houses
- Lodging houses
- Rooming houses
- Sleeping rooms
- Tourist homes
- Bed & breakfast homes

and additionally, in the NR2 district: sale of alcoholic beverage.

Uses granted by special permit or planned development shall not be treated as non-residential uses for purposes of determining the10% density under Subsection 29.202(6)(d).

(d) **Density restrictions**: Uses in the NR1 and NR2 districts are regulated by density. In this regard, the following specific provisions shall apply:

1.) For each single-family dwelling located on a zoning lot, there shall be a minimum of 6,000 sq. ft. of gross zoning lot area.

2.) For dwellings or uses other than single-family dwellings there shall be a minimum of 6,000 sq. ft. of gross zoning lot area for one living unit or other individual or separate use, plus 2,000 sq. ft. of gross zoning lot area for each additional living unit or other individual or separate use.

3.) For rooming houses, sleeping rooms, tourist homes and group homes or half-way houses, if allowed by special permit, there shall be a minimum of 6,000 sq. ft. of gross zoning lot area, plus a minimum of 500 sq. ft. for each person to occupy the premises on a residential basis in excess of those allowed in a single-family dwelling.

4.) In determining whether density requirements have been satisfied, areas dedicated or proposed to be dedicated for streets shall not be considered.

5.) In the NR2 district no specific additional area is required. However, non-residential uses permitted may not occupy more than 10% of the area contained in the zoning tot, including area devoted to parking for or accessory to such uses.

(e) **Subdivision**: A zoning lot developed within a NR1 or NR2 district need not remain under single ownership after being developed. Rather, it may be subdivided in accordance with Article VII (Subdivisions) of Chapter 13 (Administrative or Other Provisions Relating to the City), if applicable, or other applicable laws, ordinances, rules or regulations.

(f) **Minimum area requirements**: No minimum area requirements are imposed on zoning lots to be zoned NR1. No zoning lot or lots of less than 30,000 sq. ft. shall be zoned NR2.

(g) **Plat**: Prior to the development and issuance of a building permit for any zoning lot in NR1 or NR2 district, a plat thereof shall be prepared setting forth its typography and the

design, density, location and size of the proposed development. Provisions for access and public or private utilities and community television or radio antenna systems shall also be set forth. The plat shall be accompanied by any supporting materials, such as protective covenants. The City Engineer may also provide other plat requirements. The plat, and any supporting materials, shall be submitted to the City Engineer for comments and suggestions. In addition to providing comments and suggestions, the City Engineer shall require that provisions for access, public or private utilities, community television or radio antenna systems, and other general or similar needs are adequate and will allow for not only the orderly development of the zoning lot or lots in question but also of adjoining areas and zoning lots. The City Engineer may require as a condition of approval, for example, that street options or easements be granted, or impose other reasonable conditions, to assure suitable development of the entice area and for adjoining areas and zoning lots. The City Engineer shall certify such plat on approval. Decisions of the City Engineer shall be subject to appeal in the same manner as decisions of the Building Inspector.

(7)(a) In the C1A district there may be only the following uses:

RESIDENTIAL USES AS FOLLOWS (AND NONE OTHERS):

- Single-family dwellings
- Two-family dwellings

SALE OF GOODS & PRODUCTS PRIMARILY AT RETAIL AS FOLLOWS (AND NONE OTHERS):

- Art galleries
- Hearing aid stores
- Optician sales, retail
- Picture framing; when conducted for on-premise retail trade

SERVICE USES AS FOLLOWS (AND NONE OTHERS):

- Artist's studios
- Credit unions
- Photographic studios
- Telegraph offices

EDUCATIONAL INSTITUTIONS AS FOLLOWS (AND NONE OTHERS):

- Dance schools
- Dance studios
- Music studios

HEALTH, MEDICAL & CARE INSTITUTIONS AS FOLLOWS (AND NONE OTHERS):

- Chiropodist's offices
- Chiropractor's offices
- Dental clinics
- Medical clinics
- Dentist offices

- Doctor's surgeon's and physician's offices
- Optician's offices
- Osteopath's offices
- Podiatrist's offices

OFFICES INVOLVING NO RETAIL SALES INCLUDING BUT NOT LIMITED TO:

- Accountant's offices
- Architect's offices
- Attorney's or law offices
- Auditor's offices
- Bookkeeping service offices
- Business and professional offices, miscellaneous
- Chamber of commerce offices
- Detective agencies
- Security service offices
- Employment agencies
- Engineer's offices
- Insurance agencies
- Labor unions and organization offices
- Land surveyors offices
- Merchants' associations
- Not-for-profit organization offices
- Political organization offices
- Real estate offices
- Regional sales offices
- Secretarial services offices
- Security and commodity broker offices
- Towers less than 50’ in height and located on the subject property not less than the tower height (plus five additional feet) from the nearest adjacent property line.

(7) (b) In the C1B district, in addition to the uses permitted in RS, R1A, RIB, RIC, R2, R3 and C1A, there may also be the following uses, provided however that the sale of alcoholic beverages shall not be permitted (except by special permit) and there shall be no outside storage permitted:

SALE OF GOODS & PRODUCTS PRIMARILY AT RETAIL AS FOLLOWS (AND NONE OTHERS):

- Antique shops
- Appliance shops
- Art supply stores
- Bicycle sales and repair shops, provided that not more than five persons are employed or utilized (in any capacity) on the premises at any one time.
- Book and stationery stores

- Business machine sales and service
- Camera and photographic supply stores
- Candy and confectionery stores
- Carpet and rug cleaning
- Carpet and rug stores
- Catalog stores
- Catering establishments
- China and glassware stores
- Coin, philatelic, stamp and numismatic stores
- Dairy products stores
- Delicatessens
- Department stores
- Drapery stores
- Drug stores and pharmacies
- Dry good stores
- Household appliance stores and service, provided any repair service is clearly secondary to the primary use
- Household appliance repair, provided that not more than five persons are employed or utilized (in any capacity) on the premises at one time.
- Extermination shops
- Florist shops and conservatories
- Food stores, grocery stores, meat markets, fish markets
- Furniture stores
- Furrier shops, including the incidental storage and conditioning of furs
- Garden supply and seed stores, including strictly lawn and garden equipment, but not farm machinery or supplies
- Gift shop
- Haberdasheries
- Hardware stores
- Hobby shops
- Ice and milk shops
- Ice cream stores
- Jewelry stores
- Leather goods and luggage stores
- Linoleum and tile stores
- Mail order house
- Millinery shops
- Musical instrument sales and repair
- Newsstands
- Notion stores
- Office supply stores and repair of office equipment provided such repair service is clearly secondary to the primary use.

- Orthopedic and medical appliance stores, but not including the assembly or manufacture of such article
- Paint and wallpaper stores
- Pawn shops
- Pet stores
- Phonograph record, tape and sheet music stores
- Plumbing and heating showrooms, but not shops
- Radio and television sales and service, provided any repair service is clearly secondary to the primary use
- Radio and television service, provided that not more than five persons are employed or utilized (in any capacity) on the premises at any one time.
- Restaurants
- Retail outlet stores, accessory to manufacturing or wholesale establishment.
- School supply stores
- Second hand stores
- Shoe stores
- Sporting goods stores
- Tobacco shops
- Toy stores
- Trading stamp stores
- Wearing apparel shops

SERVICE USES AS FOLLOWS (AND NONE OTHERS):

- Animal hospitals; for care and treatment of domestic pets and animals only, where there are no open kennels
- Banks including drive-in facilities
- Barber shops
- Beauty parlors
- Blueprinting and Photostatting establishments
- Clothes pressing establishments, provided that not more than ten persons are employed or utilized (in any capacity) on the premises at any one time.
- Clothing and shoe tailoring or repair, provided that not more than five persons are employed or utilized (in any capacity) of the premises at any one time.
- Clothing rental agencies
- Currency exchange
- Dry cleaners and laundries including drive-in facilities, provided that not more than ten persons are employed or utilized (in any capacity) on the premises at any one time.
- Financial institutions
- Funeral parlors and undertaking establishments
- Investment companies
- Loan companies
- Locksmith shops
- News syndicates

- Newspaper distribution agencies
- Parking lots, open for storage of automobiles
- Personnel training centers
- Photo processing and film printing businesses
- Radio service and repair shops
- Recording studios
- Savings and loans; including drive-in facilities
- Taxidermists
- Television service and repair shops
- Travel agencies and bureaus and transportation ticket offices
- Water softener service
- Window cleaning firms

EDUCATIONAL INSTITUTIONS INCLUDING, BUT LIMITED TO:

- Athletic schools
- Business college
- Commercial schools
- Trade schools
- Vocational schools

(8) In the C2 district, in addition to the uses permitted in RS, R1A, RIB, RIC, R2, R3, CIA and C1B, there may also be:

SALES OF GOODS AND PRODUCTS PRIMARILY AT RETAIL AS FOLLOWS (AND NONE OTHERS):

- Auction rooms/house, but not for animals or livestock
- Automobile parts and accessories dealers, including installation providing such installation services are clearly secondary to the primary use
- Automobile vehicle sales and service. (See also, "Service Uses" under this section)
- Bakeries, provided that not more than five persons are employed or utilized (in any capacity) on the premises at any one time
- Bars and cocktail lounges, including live entertainment and dancing
- Boat and marine showrooms, sales and service
- Bottled gas dealers
- Camper and recreational vehicles sales and service
- Farm supplies
- Feed stores
- Frozen food stores, including locker rental in conjunction therewith
- Mobile home dealers
- Model home or garage displays
- Motorcycle and ATV sales and service
- Package liquor stores
- Restaurants, including live entertainment, dancing and/or the service of alcoholic beverages

- Snowmobile sales and service
- Swimming pools sales and service
- Taverns
- Truck sales and service, provided such service is clearly secondary to the primary use, and not including truck terminals.

SERVICE USES AS FOLLOWS (AND NONE OTHERS):

- Automobile driving schools
- Automobile and motor vehicle washing facilities for not more than 4 vehicles
- Automobile rentals
- Automobile repair facilities which provide engine tune-up and replacement of parts such as alternators/generators, batteries, belts, exhaust, radiators, hoses, tires, transmissions, wheel alignment for balancing, brake service and suspension, excluding auto body repair painting, frame straightening and machining of parts.
- Automobile service stations, for the retail sale and dispensing of fuel, lubricants, coolants, tires, batteries, minor accessories and supplies including installation and minor services customarily incidental hereto; facilities for chassis and gear lubrication and for washing of not more than four vehicles are permitted only if enclosed in a building.
- Automobile sales, new or used. For "franchise automobile dealers" (as hereinafter defined) such uses shall include, as an accessory use only, automobile repair and service shops, including body repair and painting, provided such accessory use is further subject to the following additional conditions and restrictions. Any accessory repair and service shop use shall not exceed 25% of the zoned lot. Accessory automobile repair and service use includes the right to temporarily store vehicles intended for repair, maintenance or service, but does not include or permit the storage or maintenance of vehicles primarily intended for salvage or junk or for use of parts for other vehicles. All body repair, painting, service, or maintenance, shall take place or be performed within enclosed buildings. Where any such permitted accessory use is not within an enclosed building (for example, the temporary storage of vehicles being repaired) and such use abuts a residential district at a side or rear lot line only by an alley, such accessory use shall be effectively screened from the abutting residential district by a solid wall or fence at least eight feet in height extending along such rear or side lot line. As used herein "franchise automobile dealers" shall mean a person, business or entity engaged in the business of the retail sale of new automobiles pursuant to a license or franchise agreement with an automobile manufacturer.
- Cartage and express facilities, trucks not over 1-1/2 tons capacity
- Clothing and shoe tailoring, sewing, stitching, repair, manufacturing, production and assembly provided that not more than ten (10) persons are employed or utilized (in any capacity) on the premises at any one time.
- Electrical shops
- Equipment rental and leasing service
- Furnace, heating, air-conditioning, and refrigeration shops, supplies & service

- Furniture cleaning, repair and upholstering
- Interior decorating studios, including upholstering and making of draperies, slip covers and other similar articles, when conducted as part of the retail operations and secondary to the principal use.
- Lawnmower sales and repair shops
- Linen, towel, diaper and other similar supply services
- Office equipment repair
- Parcel delivery service
- Parking lots, open for storage of private passenger automobiles
- Parking lots, commercial, enclosed parking
- Print shops, provided not more than ten persons are employed or utilized (in any capacity) on the premises at any one time.
- Plumbing shops, provided not more than ten persons are employed or utilized (in any capacity) on the premises at any one time.
- Sewer and septic tank cleaning and rodding service
- Sheet metal shops, provided not more than ten persons are employed or utilized (in any capacity) on the premises at any one time.
- Theatres, indoor only
- Tire, tire retreading and repair shops, provided not more than ten persons are employed or utilized (in any capacity) on the premises at any one time.
- Towing service

MISCELLANEOUS USES:

- Circuses, carnivals and similar entertainment activities, provided that the same shall be of a strictly temporary nature and in no event exceeding seven (7) consecutive days for any individual event.
- Recycling collection centers for aluminum cans, glass and/or paper products, but only if clearly incidental or subordinate to a commercial use otherwise allowed in the C2 district and not nearer than 50’ of a residentially zoned area, provided there shall be no open storage of cans, glass or paper products.

(9) **C3 district (planned commercial district)**: In the C3 district, there may be any of the uses set forth in the above sections, subject to the following:

(a) **Generally**: A C3 district shall be laid out and developed as a unit according to a plan approved by the Council for the purpose of providing modern shopping facilities of integrated design in appropriate locations to serve residential neighborhoods. The uses allowed shall be limited to those contemplated by the original plan or any amendment thereof.

(b) **Plan and procedures**: Before such district is established, the person or persons desiring to use and develop the land shall submit a plan to the Commission showing in detail the manner in which the land is to be used, the location, character and appearance of buildings, parking areas, service areas, walks, lighting and appurtenant facilities the provisions for grass, trees, shrubs and other landscaping adjacent to the surrounding property and all other material information. If the Commission reports to the Council that the plan complies with all regulations of this chapter, is in the best interests of the city, will not adversely affect adjacent property

values and is consistent with the public interest and purposes of this Chapter, then the Council may approve the district and plan, and building and occupancy permits may be issued to carry out the approved plan.

(c) **Conditions and guarantees**: Prior to approving any plan, the Plan Commission may recommend, and the City Council may stipulate, such conditions and restrictions upon the establishment, location, construction, maintenance and operation of the use or uses as deemed necessary for the protection of the public interest and to secure compliance with the standards and requirements as specified herein, or as may be from time to time required. In all cases in which a C3 district is approved, the City Council shall require such evidence and guarantee as it may deem necessary as proof that the conditions stipulated in connection therewith are being, and will be complied with. All such conditions and guarantees must be fully complied with prior to the use or uses commenced. If such conditions, guarantees or specific conditions are not complied with, the use shall be immediately terminated. The City Council may also revoke any use for a failure to comply. In that event the zoning shall revert to its former zoning.

(d) **Special condition**: All plans approved hereunder shall be subject to the specific condition that if actual construction of buildings is not begun and thereafter actively pursued within 2 years of the date of approval by the City Council, the district shall automatically revert to the same zoning classification existing prior to said approval, provided that the City Council may extend such time periods as it shall deem appropriate. Actual construction of buildings shall require, at a minimum, actual work on the components of the building and not mere land preparation and architectural planning.

(e) **Amendment**: Plans may be amended by the same procedure by which they are originally approved. Any material change in the plan or use must be approved. Notwithstanding anything herein to the contrary, a strictly temporary use or activity otherwise permitted in a C2 district shall not require a plan amendment although not contemplated or set forth in the plan.

(10) **Downtown districts ---**

(a) **General standards for all downtown districts**: All non-residential uses of structures and land in the downtown district are subject to the general standards and regulations of this ordinance. In addition, all uses located in the downtown districts shall be subject to the following district standards:

1.) **Outdoor storage**: No outdoor storage of goods or materials shall be permitted unless permitted by a special use permit as specified in this ordinance. When approved via a special permit, outdoor storage areas shall be screened by an six foot tall wooden sight proof fence as approved on the site development plan.

2.) **Adult uses**: No adult uses as defined in Article I of this ordinance shall be permitted in any downtown district.

3.) **Accessory buildings, structures and uses**: No automatic vending machines dispensing food or drink items shall be permitted on the exterior of any structure. All uses shall conform to the requirements for accessory buildings, structures and uses as set forth in Article VII.

4.) **Site plan review**: To insure compliance with the applicable provisions of this ordinance, any exterior building construction or site improvements, or increase in the intensity of an existing use, including variances and special uses, but excluding normal maintenance activity, in the downtown districts shall require site plan review prior to the issuance of a building permit. This process shall ensure that new development proposals are in full compliance with all

applicable city codes, ordinances, standards and policies. Development proposals which are located within existing buildings or result in the redevelopment of existing properties shall comply with those city requirements and policies as specified by the Municipal Code of the City of Quincy.

5.) **Definitions**: The following definitions shall apply to the interpretation and enforcement of this ordinance.

Storefront: The first story of the facade of a commercial establishment facing the street. A storefront usually incorporates a main entrance and large display windows.

Story: The portion of building between the surface of any floor and the surface of the floor next above, or if there is no floor above, the space between the floor and the ceiling next above.

Abrasive cleaning: Any method utilized to clean a building exterior causing the wearing of the building's material surface. An example of an abrasive cleaning method is the use of sandblasting.

6.) **Setbacks and street wall alignment**:

a.) In the D1 district all structures shall be built to the street right-of-way unless the adjoining structures are set back from the street right-of-way. Where no structures exist on a block, new structures shall be built to the street right-of-way line. Where adjoining buildings are set back from the right-of-way line, new structures shall be set back the same distance as the adjoining building located closest to the street right-of-way. On corner lots, new structures shall be built out to the street right-of-way of both streets.

b.) All structures in the D2, D3, D4 and D5 districts shall be set back the same distance as the adjoining buildings. If the adjoining structures are set back different distances, then the new construction shall be set back the average distance between the new structures or set back the same distance as the adjoining structure located closest to the street right-of-way. If no structures are located on the block, the setback shall mirror the setback of the structures across the street. If none of these provisions apply, the setback shall be as established on the site development plan. No parking spaces shall be permitted in front of a structure unless located within a public right-of-way.

c.) Where a side or rear yard in a D district is adjacent to a R district, such yard shall have a width or depth of 10’ and provide sight proof landscaping and/or fencing to screen the use from adjacent properties as approved on a site plan per requirement in Article XV.

7.) **Building standards**: All non-residential uses of structures in the D1, D2, D3 and D4 downtown districts, and all residential structures having more than four dwelling units in the D1, D2, D3 and D4 downtown districts, are subject to the general standards and regulations of this ordinance. Any new structures or alterations to the exterior of any existing non-residential structure, other than routine maintenance, shall comply with the following design standards.

a.) **Building height**: All new structures constructed within the D1 district shall be two (2) stories in height and shall have a front facade of at least 24’ in height. If the proposed structure is a single story structure, it shall have a false facade in compliance with Section d). **Windows** of this ordinance. Unless otherwise provided by this ordinance, building heights shall not exceed a height of five (5) stories or 60’.

b.) **Building width**: New buildings greater than 30’ in width shall have facades visually subdivided into proportional bays. Said proportional bays shall not exceed 30’.

c.) **Roof forms**: Roof lines of new construction shall be similar to roof lines of adjacent buildings with historically appropriate roof forms. Gable roof shapes are permitted if parapet walls hide the end wall and water drainage is contained within the property. Roof lines of rear additions shall be lower than the roof line of the main structure.

d.) **Windows**:

(1) **Windows in commercial structures**:

(a) **Upper story windows**: Proportions of upper story window openings shall be similar to the proportions of adjacent historically appropriate buildings. Upper story window openings shall appear as punched openings within a solid wall, with glazing set back from the exterior wall surface.

(b) **First floor storefronts**: New storefronts and replacement storefronts in the D1 district shall maintain the basic features of a historic storefront: display windows resting upon bulkheads, entrances flanked by piers or columns, and transoms and belt courses above the display windows and entrance. At least 80% of the area of the first floor storefront shall be glass.

(c) In all downtown districts at least 30% of the first floor area of any structure shall be glass. At no time shall the glass area exceed 80% of the first floor area.

(d) Replacement windows shall reflect the design of the original building or period style if known.

(e) Window openings blocked or screened by concrete units, brick, plywood or other materials shall be reopened to reestablish the original rhythm of the voids on any street facade.

(2) **Windows in new residential structures**: Proportions of window openings in new residential structures or uses shall be similar to the proportions of window openings of adjacent historically appropriate buildings. Window openings shall appear as punched openings within a solid wall, with glazing set back from the exterior wall surface.

(3) **Industrial structures**: Industrial structures shall maintain existing window openings.

e.) **Exterior materials**:

(1) **New construction materials**: Brick, stone, exterior insulation finish systems ("Dryvit") or split-faced concrete block shall be used as construction material for front facades and side-street-facing facades.

(2) **Rehabilitation construction materials**: When rehabilitating existing structures, brick or stone shall be utilized to closely match the historically appropriate building materials. Upon site plan review split-faced concrete block may be used as an alternative when colored to match the historically appropriate materials.

(3) **Detailing materials**: Cast and molded metals, wood, structural glass when replicating a historically appropriate storefront design, fiberglass replications of architectural details, or architecturally detailed exterior insulation systems shall be used as detailing materials or visible exteriors of new or rehabilitated buildings.

(4) **Prohibited exterior materials**: Unless used to replicate a historically appropriate design, the following materials are prohibited from use on visible exteriors of new or rehabilitated buildings: wood, vinyl, or aluminum siding, wood, asphalt, or fiberglass/asphalt shingles; structural ribbed metal panels; plywood or plastic sheathing: reflective and mirrored glass; unfinished metal.

f.) **Abrasive cleaning methods**: The use of abrasive cleaning methods, for example sandblasting, on the masonry exterior of any structure in the downtown district is prohibited.

g.) **Variances**: Where exceptional or unusual conditions exist appeals for variation to these restrictions shall be heard by the Board of Zoning Appeals who shall in turn make recommendation, consistent with the aesthetic character of the downtown districts, to the City Council.

8.) **Signs**: Wall signage shall be permitted on each side of the structure with direct street frontage. When individual letters are utilized for wall signage, the area of the signage shall include the area within a continuous perimeter around each word. No attached wall sign shall be placed more than 25' above the street grade.

a.) **Front facade sign area**: The combined area of all signs and display advertisements on the front facade shall not exceed 10% of the storefront area.

b.) **Side street wall signs**: Side street wall signs shall be flush-mounted or painted directly upon the flat surface of the building.

(1) Side street wall signs painted directly on the building surface shall not exceed 5% of the side street wall.

(2) Side street wall signs attached to the building surface shall not exceed 32 sq. ft.

c.) **Side or rear facade sign area**: When parking for a structure is located to the side or rear of the structure wall signage of 20 sq. ft. will be permitted on the side or rear facade of the structure.

d.) **Projecting signs**: Projecting signs allowed by city revocable permit shall be no larger than 15) sq. ft. Brackets for projecting signs shall be located under the second floor window sills, or no more than 15' from the street level.

e.) **Ground-mounted signs**: Ground-mounted signs shall not exceed a height of 6' or an area of 32 sq. ft. per face. These signs may be backlit cabinet signs where no less than 60% of the sign face area must be of an opaque material such as wood or metal.

f.) Signage permanently painted on glass shall not exceed 5% of the total area of the glass display windows.

g.) **Directional signs**: Directional signs of 6 sq. ft. shall be permitted. The height of directional signage shall not exceed 3'.

h.) **Prohibited signage and awnings**: The following are prohibited to the downtown district.

(1) Internally-lighted signs.

(2) Internally-lighted and/or plastic awnings.

(3) Flashing signs, pedestal signs, and pie-mounted signs.

(4) Mass-produced blow-molded plastic signs.

(5) Billboards of all types and sizes, and whether affixed to structures or free-standing.

(6) Portable trailer signs, temporary portable signs of like nature, and other similar signs not permanently affixed to a building or to the ground are not permitted except through the revocable permit process.

9.) **Parking**: All uses within the downtown districts shall provide parking in compliance with Article VI of this ordinance. Except the following provisions shall be adhered to:

a.) No parking spaces shall be permitted in front of a structure unless located within a public right-of-way.

b.) When no structure exits on a property, all off street parking facilities shall provide adequate landscaping and/or iron, brick or natural stone fencing between 6 inches and 42 inches in height at the build line as approved by the Department of Planning and Development on the site development plan

c.) Existing buildings not complying with off-street parking requirements (as of the effective date of this ordinance) may be remodeled, repaired, structurally altered and change use without complying with the minimum parking standards. If a structure is enlarged in any way, parking must be provided for the area of the enlargement in compliance with Article VI of this ordinance.

d.) Where parking is provided in a D district adjacent to a R district, all parking spaces, loading spaces and drives shall be setback from the R district10'. This setback shall provide sight proof landscaping and/or fencing to screen the use from adjacent properties as approved on a site plan per requirements in Article XV.

10.) **Landscaping**: When any construction, alteration, or change in use in a downtown district requires site plan review, a landscaping plan shall be included with the site plan.

11.) **Height, yard and area requirement**: Unless otherwise noted in the downtown district regulations height, yard and area requirements for all lots and structures shall conform to Articles III, IV and V of this ordinance.

12.) **Transmission and receiving apparatus**: Any transmission or receiving apparatus is permitted as an accessory use on top of any downtown building. Said equipment shall not exceed a height greater than 15 feet higher than the building. Such equipment shall be screened from the street level as approved by the Director of Planning and Development.

13.) **Existing uses**: Any permitted existing use, located in a downtown district prior to August 1, 1998 shall be permitted by special use permit.

(b) **D1 downtown retail district**:

1.) **Intent and purpose**: The D1 downtown retail district is a district intended to accommodate a wide variety of retail commercial uses, including both convenience retail and those which attract shoppers from a larger market area. The street level areas of all buildings shall be utilized for retail and retail service type uses to promote active street level uses and a retail core in the central business district. Uses above the street level shall provide a wider range of services and customer needs. Residential uses shall be encouraged on the upper floors of buildings to provide pedestrian activity in this retail core area after business hours.

2.) **Primary permitted uses**: The following uses shall be permitted within the D1 district:

- Bars, taverns and night clubs
- Educational institutions
- Financial institutions
- Health clubs

- Lobbies and public spaces when located within an office building or an apartment building
- Off street parking lots, excluding the sale or storage of vehicles
- Personal service establishments
- Professional offices
- Public offices and facilities
- Religious institutions
- Repair shops for small appliances and personal electronics
- Restaurants (except those with drive-through services)
- Retail sales
- Theaters
- Accessory uses customarily incidental and subordinate to the services

3.) **Secondary uses**: The following uses shall be permitted above or below the street level of all structures within the Dl district:

- Artist, music and dance studios
- Hotels
- Photography studio
- Radio and television stations
- Residential units
- Accessory uses customarily incidental and subordinate to the principal use it serves

4.) **Special uses**: The following special uses are permitted in the D1 district subject to the provisions of Section 29.203 of this ordinance:

- Automobile sales and service
- Drive-up banking facilities including automated and teller operated facilities
- Drive-through or drive-up facilities
- Hotels when no primary permitted uses of the district are provided on the street level
- Indoor recreation facilities
- Mortuary
- Motels
- Sales of automotive parts
- Secondary permitted uses when located on the first floor of a structure
- Vocational schools and other private for profit schools

5.) **Height requirement**: No structure shall be permitted less than 25 feet or 2 stories in height. Any structure over 5 stories or 60 feet in height shall be permitted through the special use permit procedure in Section 29.203 of this ordinance.

(c) **D2 downtown general business district**:

1.) **Intent and purpose**: The D2 downtown general business district is a district intended to accommodate a wide variety of traditional downtown commercial uses, including retail, office, institutional and service uses.

2.) **Permitted uses**: The following uses shall be permitted within the D2 district:

- Artist, music and dance studios
- Banquet facilities
- Bars, taverns and night clubs
- Child care centers
- Contractor's offices with indoor storage, including plumbing, electric, heating and cooling contractors
- Equipment rental and leasing service
- Essential public utility facilities
- Financial institutions, including freestanding automatic teller machines and drive-up facilities
- Health clubs
- Hotels
- Indoor and outdoor recreation facilities
- Lumber yards and farm implement dealerships
- Mortuary
- Motels
- Newspaper printing and publishing
- Off street parking lots, excluding the sale or storage of vehicles
- Offices
- Personal service facilities
- Photography studio
- Printers
- Product assembly
- Public offices and facilities
- Public utility facilities
- Radio and television studios
- Religious institutions
- Repair of electronics, small engines, appliances and electronic motors
- Residential units
- Restaurants (except those with drive-through service)
- Retail sales
- Sales of automotive parts
- Sign printing and assembly
- Schools
- Telecommunication facilities
- Theaters
- Veterinary clinics (excluding kennels)
- Accessory uses customarily incidental and subordinate to the principal use it services

3.) **Special uses**: The following special uses are permitted in the D2 district subject to the provisions of Section 29.203 of this ordinance:

- Car washes
- Convenience stores with gasoline service
- Drive-through facilities
- Metal and machine fabrication
- Outdoor storage facilities as an accessory use to any permitted use, when screened with landscaping and a 6 foot high sight proof fence
- Telecommunication facilities over 60 feet height
- Vehicle body shops, filling stations, service, sales and/or leasing facilities
- Vocational schools, dance studios, and other private for profit schools
- Warehousing and distribution centers

4.) **Height requirements**: No structures over 5 stories or 60 feet in height shall be permitted without a special use permit as provided in Section 29.203 of this ordinance.

(d) **D3 downtown riverfront district**:

1.) **Intent and purpose**: The D3 downtown riverfront district is intended to accommodate a concentration of entertainment, hospitality and tourism uses while accommodating the existing industrial uses. Also located within this district is the "Arts Corridor" which welcomes a variety of uses to show artist's talents, provide a unique experience for pedestrians and serve as a highly visible "foyer" to the city.

2.) **Permitted uses**: The following uses shall be permitted within the D3 district:

- Automatic teller machines
- Bars, taverns and night clubs
- Bicycle sales and rental
- Essential public utility facilities
- Galleries
- Health clubs
- Indoor sports facilities
- Motels and hotels
- Museums
- Offices
- Outdoor theaters
- Public facilities
- Residential units
- Restaurants (except those with drive-through service)
- Retail sales
- Studios
- Telecommunication facilities
- Theaters

- Warehousing, light manufacturing, production, processing, assembly, fabrication, packaging, cleaning, servicing, testing, repair, display, storage and sales of materials, goods or products within a structure
- Accessory uses customarily incidental and subordinate to the principal use it services including outdoor display and sales. All restaurants, bars, taverns and night clubs may have outdoor seating when associated with the primary use.

3.) **Special uses**: The following special uses are permitted in the D3 district subject to the provisions of Section 29.203 of this ordinance:

- Vehicle filling stations, service stations, body shops or repair facilities
- Drive-through or drive-up facilities
- Telecommunication towers over 60 feet in height

4.) **Height requirements and view protection**: This Section is intended to preserve the views west of 3rd Street. Heights of buildings and projecting signage will be regulated as a measure to preserve the view of the Mississippi River from upper levels of buildings and the public right-of-way.

The height of the east elevation of any proposed structure west of 3rd Street within this district shall not exceed a height of 4 stories (50 feet). The maximum height of the west elevation of a structure shall be established at the same elevation above mean sea level as the roof line of the east elevation. Structures east of 3rd Street shall not exceed a height of 5 stories (60 feet). Any structure exceeding these height requirements will not be permitted without a special use permit as provided in Section 29.203 of this ordinance.

All east-west street corridors in this district shall be free of signs or awnings projecting more than 3 feet from any structure over the right-of-way. All new structures constructed along these streets west of 3rd Street shall comply with the above mentioned height requirements and be set back 5 feet from the right-of-way.

5.) **Outdoor uses**: Outdoor table service for eating and drinking establishments shall be permitted to encroach into the public right-of-way. The encroachment shall provide a 4 foot wide walkway and all outdoor eating establishments shall be clearly delineated by decorative fencing or planters.

6.) **Performance standards for industrial uses**: The performance standard regulations shall establish standards for vibration, noise, odor, smoke, toxic gases, emissions, radiation, glare, and heat to minimize negative effects on adjacent land uses and developments.

a.) **Vibration**: Every use shall be so operated that the maximum ground vibration generated is not perceptible without instruments at any point beyond the lot line of the lot on which the use is located.

b.) **Noise**: Every use shall be so operated that the noise generated does not exceed noise levels beyond its property lines in excess of the sound produced in normal commercial activities.

c.) **Odor**: Every use shall be so operated that no offensive or objectionable odor is emitted in accordance with the requirements of Chapter 21 of the Municipal Code.

d.) **Smoke**: Every use shall be so operated that no smoke from any source shall be emitted in accordance with the requirements of Chapter 21 of the Municipal Code.

e.) **Toxic gases**: Every use shall be so operated that there is no emission of toxic, noxious, or corrosive fumes or gases.

f.) **Emission of dirt, dust, fly ash, and other forms of particulate matter**: Every use shall be so operated that there is no emission of dirt, dust, fly ash and other forms of particulate matter.

g.) **Radiation**: Every use shall be so operated that there is no dangerous amount of radioactive emissions.

h.) **Glare and heat**: Any operation producing intense glare or heat shall be performed in an enclosure in such a manner as to be imperceptible along any lot line without instruments.

i.) Any addition, modification or change in any regulations, code, ordinance or other standard referred to in the zoning performance standards regulations shall become a part of these regulations.

(e) **D4 downtown office and medical facility district**:

1.) **Intent and purpose**: The D4 downtown office and medical facility district is intended to provide for the specific needs of medical centers and uses associated with these centers in an area to insure the compatibility of land use.

2.) **Permitted uses**: The following uses shall be permitted within the D4 district:

- Adult day care centers
- Assisted living facilities
- Bars, taverns and night clubs
- Bed and breakfast facilities when utilized by families of patients
- Board and care facilities
- Boarding houses and dormitories for students of private technical schools, nursing schools or medical schools permitted within this district
- Child care centers
- Essential public utility facilities
- Financial institutions, including freestanding automatic teller machines and drive-up facilities
- Florists
- Greeting card and gift shops
- Group homes
- Health clubs
- Hospices
- Hospitality houses
- Intermediate care facilities
- Medical centers
- Medical and dental offices
- Mortuaries
- Multiple family residences
- Nursing and medical schools
- Nursing homes
- Offices

- Pharmacies, convenience stores (without gas pumps) and variety stores
- Printers
- Private technical schools teaching skills directly related to the medical profession and use of medical equipment
- Public buildings
- Religious institutions
- Residential care facilities
- Restaurants (except those with drive-through service)
- Sale and rental of medical equipment
- Schools
- Sheltered care facilities
- Single family residences
- Skilled care facilities
- Telecommunication facilities
- Accessory uses customarily incidental and subordinate to the principal use it services except that no automatic vending machines shall be permitted on the exterior of any structure or in view of the public right-of-way

3.) **Special uses**: The following special uses are permitted in the D4 district subject to the provisions of Section 29.203 of this ordinance:

- Convenience stores with gas pumps
- Restaurants with drive-through service
- Retail sales
- Telecommunication facilities over 60 feet in height
- Vehicle filling stations, service stations or repair facilities
- Vocational schools, dance studios, and other private for profit schools

4.) **Height and area requirements**: No structures over 5 stories or 60 feet in height shall be permitted without a special use permit as provided in Section 29.203 of this ordinance.

(f) **D5 downtown industrial district**:

1.) **Intent and purpose**: The D5 downtown industrial district is intended to accommodate traditional downtown river uses. These uses are typically light industrial, manufacturing and warehousing activities that have historically been located in the downtown area. The district further maintains these uses and any future use at a scale and intensity that is compatible with the residential and commercial uses in the area.

2.) **Permitted uses**: The following uses shall be permitted within the D5 district:

- Any use permitted within the D2 downtown general business district
- Warehousing, manufacturing, production, processing, assembly, fabrication, packaging, cleaning servicing, testing, repair, display, storage and sales of materials, goods or products within a structure
- Accessory uses customarily incidental and subordinate to the principal use it services

3.) **Special uses**: The following special uses are permitted in the D5 district subject to the provisions of Section 29.203 of this ordinance:

- Car washes
- Lumber yards and farm implement dealerships
- Outdoor storage facilities
- Restaurants with drive-through facilities
- Telecommunication facilities over 60 feet in height
- Vehicle body shops, filling stations service, sales and/or leasing facilities
- Vocational schools

4.) **Height requirements and view protection**: This Section is intended to preserve the view corridors west of 3rd Street. Heights of buildings and projecting signage will be regulated as a measure to preserve the view of the Mississippi River from upper levels of buildings and the public right-of-way.

The height of the east elevation of any proposed structure west of 3rd Street within this district shall not exceed a height of 4 stories (50 feet). The maximum height of the west elevation of a structure shall be established at the same elevation above mean sea level as the roof line of the east elevation. Structures east of 3rd Street shall not exceed a height of 5 stories (60 feet). Any structure exceeding these height requirements will not be permitted without a special use permit as provided in Section 29.203 of this ordinance.

All east-west street corridors in this district shall be free of signs or awnings projecting more than 3 feet from any structure over the right-of-way. All new structures constructed along these streets west of 3rd Street shall comply with the above mentioned height requirements and be set back 5 feet from the right-of-way.

(11) **M1 - light industrial district**:

Intent and purpose: The M1 light industrial district encompasses areas wherein may be achieved a satisfactory correlation of factors such as adequate transportation facilities, accessibility to dwelling areas, efficient land assembly, adequate topographic conditions, and adequate provision of public utility facilities required by industry. Uses permitted in the district are typically light industrial, manufacturing, distribution and warehousing activities that are compatible with the residential and commercial uses in the area. Industrial activity in which the finished product is generally produced from semi-finished material applies to this district. Commercial uses are permitted within the district to provide support services to the industrial uses.

Permitted uses: In the MI district, there may be the following uses, provided that such uses are not obnoxious or offensive due to emission of noise, odor, dust, gas or, vibration:

COMMERCIAL:

- Commercial uses permitted in any C district and specially set forth in Section 29.202(5), but not uses incorporated by reference from the RS, R1A, R1B, RIC and R2 districts.
- Contractors offices and storage facilities
- Night clubs
- Farm machinery sales and service

- Lumber yards
- Storage and sale of new trailers and other similar equipment on an open lot provided that compliance is made with the screening and fencing requirements stated elsewhere in these provisions
  Telecommunication centers

MANUFACTURING:

- Production, processing, cleaning, testing or repair, limited to the following uses and products:
- Advertising displays
- Apparel and other products manufactured from textiles
- Art needle work and hand weaving
- Automobile painting, upholstering, repairing, reconditioning and body and fender repairing and motor vehicle washing facilities when done within the confines of a structure.
- Awnings, venetian blinds
- Bakeries
- Beverages - bottling and distributing
- Boat, camper and recreational vehicle storage facilities
- Books - hand binding and tooling
- Bottling works
- Brushes and brooms
- Cameras and other photographic equipment and supplies
- Camper storage facilities
- Canning and preserving
- Canvas and canvas products
- Carting, express hauling or storage yards
- Ceramic products - such as pottery and small glazed tile
- Cleaning and dyeing establishments
- Clothing
- Concrete block manufacturing
- Concrete ready-mix plants
- Confectionery manufacturing
- Cosmetics and toiletries
- Dentures
- Display lot - for open display of goods and equipment ancillary to the principal use may be permitted unfenced provider that the area involved shall not exceed 10% of the total lot area of the principal use and the area must be properly maintained and shall be completely within the setback requirements set forth elsewhere in this Section.
- Drugs
- Electronics
- Electric motor repairing
- Fiber products manufacturing, provided fibers are previously prepared
- Food products processing

- Foundry casting lightweight nonferrous metal, and no brass, manganese, bronze or zinc
- Fur goods, not including tanning and dyeing
- Glass products, from previously manufactured glass
- Grain elevators
- Hair, felt and feather products (except washing, curling and dyeing)
- Hosiery
- Ice, dry and natural
- Ink mixing and packaging and inked ribbons
- Insecticides
- Jewelry
- Laboratories - medical, dental, research, experimental and testing
- Laundries
- Leather products, including shoes and machine belting
- Luggage
- Lumber yard (including related roof-covered display areas within any yard and setback requirements)
- Machine shops for tool, die and pattern making
- Manufactured homes
- Metal finishing, plating, grinding, sharpening polishing, cleaning, rust-proofing, and heat treatment
- Mini-storage facilities, provided all storage is enclosed facilities and provided there is no storage of flammable liquids or explosive materials
- Metal stamping and extrusion
- Monument engraving
- Musical instruments
- Open storage of building material, lumber, coal, machinery and pipe (not otherwise permitted) when the material is enclosed within a solid fence at least six (6) feet high within required building lines
- Orthopedic and medical appliances, such as artificial limbs, braces, supports, stretchers
- Paper products, small, such as envelopes and stationery, bags, boxes, tubes and wallpaper printing
- Perfumes and cosmetics
- Pharmaceutical products, compounding only
- Plastic products, but not including the processing of the raw materials
- Plating
- Precision instruments - such as optical, medical and drafting
- Products from finished materials - plastic bone, cork, feather, felt fiber, fur, glass, hair, horn, leather, paper, precious and semi-precious stones, rubber, shell or yard
- Printing and newspaper publishing, including engraving and photoengraving
- Public utility electric substation and distribution centers, gas regulation centers and underground gas holder stations
- Repair of household or office machinery or equipment

- Rubber products, small and synthetic treated fabrics (excluding all rubber and synthetic processing), such as washers, gloves, footwear, bathing caps and atomizers
- Sheet metal products (light)
- Sign painting shops
- Soap and detergents, packaging only
- Soldering and welding
- Sporting and athletic equipment, such as balls, baskets, cues, gloves. bats, racquets and rods
- Statuary, mannequins, figurines and religious and church art goods, excluding foundry operations
- Television and radio broadcasting transmitters
- Textiles - spinning, weaving, manufacturing, dyeing, printing, knit goods, yarn, thread and cordage, but not including textile bleaching
- Tire retreading, recapping and rebuilding
- Tobacco curing and manufacturing and tobacco products
- Tools and hardware - such as bolts, nuts and screws, doorknobs, drills, hand tools and cutlery, hinges, house hardware, locks, nonferrous metal castings and plumbing appliances
- Truck, tractor, trailer or bus storage yards and terminals
- Umbrellas
- Upholstering (bulk), including mattress manufacturing, rebuilding and renovating
- Vehicles, children's such as bicycles, scooters, wagons and baby carriages
- Watches
- Wood products, such as furniture, boxes, crates, baskets, pencils, cooperage works
- Wholesale and warehousing building

PUBLIC AND COMMUNITY SERVICE USES:

- Bus terminals, bus garages, bus lots, street railway terminals, or streetcar houses
- Electric and gas substations
- Fire stations
- Municipal or privately owned recreation buildings or community centers
- Parks and recreation areas
- Police stations
- Sewage treatment plants
- Telephone exchanges
- Water filtration plants
- Water pumping stations
- Water reservoirs

RESIDENTIAL USES:

- Dwelling units for watchmen and their families and when located on the premises where they are employed in such capacity

- Multiple dwellings: Multiple family dwellings established in any M1 district (light industrial district) prior to the effective date of this amendment (July 12 1992) may be maintained as non-conforming uses in accordance with this Code
- Single-family and two-family dwelling units established before the effective date hereof

(12) **M2- heavy industrial district**:

Intent and purpose: The M2 heavy industrial district encompasses industrial areas wherein may be achieved a satisfactory correlation of transportation facilities, accessibility to dwelling areas, efficient land assembly, topographic conditions, and provision of public utility facilities required by industry. Such areas may contain certain mineral and natural resources. These areas may be situated and operated so that the extraction, processing or both, of basic raw materials may be conducted in a manner that will not create conflict or hazard in the general community and that will protect and preserve the public health, safety, and general welfare.

Permitted uses: In the M2 district, there may be any use, subject to the following exceptions and special provisions:

(a) **Church or other uses**: No church, library, school or hospital shall be built.

(b) **Dwellings**: No building shall be built or converted for dwelling purposes other than one for a resident watchman or caretaker employed on the premises where they are employed in such capacity.

(c) **Junk yards**: Junk yards, auto wrecking yards and salvage yards are permitted, but must be surrounded by a solid fence at least six (6) feet high located within the building lines, and provided the junk, automobiles or salvage shall not be piled higher than the fence.

(d) **Animal crematoriums**

(e) **Separate approval**: The following uses must be given separate Council approval. Before granting such approval, the Council shall refer application to the Fire Chief for study, investigation, and Council may assume approval of the application.

- Acid manufacture
- Cement, lime, gypsum or plaster of paris manufacture
- Distillation of bones
- Explosives manufacture or storage
- Fat rendering
- Fertilizer manufacture
- Gas manufacture
- Garbage, offal or dead animals, reduction or dumping
- Glue manufacture
- Petroleum or its products, manufacturing, refining of or wholesale storage of smelting of tin, copper, zinc or iron ores
- Stockyards or slaughter of animals

(f) **Special conditions**: The City Council may, after a public hearing, impose conditions on any use in the M2 district, if found necessary by the City Council in furtherance of the public health, safety or morals.

(g) **Adult uses**: Without limiting the uses permitted in the M2 district, adult uses are specifically allowed.

(13) **M3 - planned industrial district**:

Intent and purpose: The M3 planned industrial district encompasses areas wherein may be located developments and uses permitted in the M1 light industrial district and such development and use designated in the C commercial districts as may be specifically related to a particular industrial activity or complex. It is the purpose of these regulations to facilitate the establishment of developments and uses in locations appropriate under approved site plans and conditions. Such approved plans and conditions shall be consistent with good planning practice and compatible with permitted developments and uses in adjoining districts, so as to protect the general welfare subject to the following exceptions and special provisions.

(a) **Generally**: A M3 district shall be laid out and developed as a unit according to a plan approved by the Council for the purpose of providing modern industrial areas of integrated design. The uses allowed shall be limited to those contemplated by the original plan or any amendment thereof.

(b) **Plan and procedure**: Any area may be zoned M3 prior to the submission of plans regarding actual use. Before such district is utilized, however, the person or persons desiring to use and develop the land shall submit a plan to the Commission showing in detail the manner in which the land is to be used, the location, character and appearance of buildings, parking areas, service areas, walks, lighting and other landscaping adjacent to the surrounding property and all other material information.. If the Commission reports to the Council that the plan complies with all regulations of this Chapter, is in the best interests of the city, will not adversely affect adjacent property values and is consistent with the public interest and purposes of this Chapter, then the Council may approve the district and plan, and building and occupancy permits may be issued to carry out the approved plan.

(c) **Condition and guarantees**: Prior to approving any plan, the Plan Commission may recommend, and the City Council may stipulate, such conditions and restrictions upon the establishments, location, construction, maintenance and operation of the use or uses as deemed necessary for the protection of the public interest and to secure compliance with the standards and requirements as specified herein, or as may be from time to time required. In all cases in which a M3 district is approved, the City Council shall require such evidence and guarantee as it may deem necessary as proof that the conditions stipulated in connection therewith are being and will be complied with. All such conditions and guarantees must be fully complied with prior to the use or uses being commenced. If such conditions, guarantees or specific condition are not complied with, the use shall be immediately terminated. The City Council may also revoke any use for a failure to comply. In that event, the zoning shall revert to its zoning prior to M3 zoning.

(d) **Special condition**: All plans approved hereunder shall be subject to the specific condition that if actual construction of buildings is not begun and thereafter actively pursued within two (2) years of the date of approval by the City Council, the plans shall no longer be considered approved, provided that the City Council may extend such time periods as it shall deem appropriate. Actual construction of buildings shall require, at minimum, actual work on the components of the building and not mere and preparation and architectural planning.

(e) **Amendment**: Plans may be amended by the same procedure by which they are originally approved. Any material change in the plan or use must be approved. Notwithstanding

anything herein to the contrary, a strictly temporary use or activity otherwise permitted in a M3 district shall not require a plan amendment although not contemplated or set forth in the plan.

(f) **Limitations on use**: Notwithstanding anything herein to the contrary, the following limitations are placed on use:

1.) No church, library, school or hospital shall be built. No building shall be built or converted for dwelling purposes other than one for a resident watchman or caretaker employed on the premises where they are employed in such capacity.

2.) Open storage of materials shall be limited to that incidental to the industrial use and shall be surrounded by a concrete or masonry wall of at least six (6) feet in height, if such storage is not fully enclosed within a building and provided that materials shall not be stored higher than the wall.

3.) Outdoor advertising shall be limited to one sign relating to the products, services or name of the establishment and attached to a building in a manner not to extend more than one foot from any facade.

29.203 <u>Certain uses may be located by special permit</u> ---

(1) **Generally**: Pursuant to this Section, uses set forth in Subsection 29.203(2), or otherwise allowed in this Chapter by special permit, may be allowed by special permit. Additionally, building and structures may, by special permit, be built to a height greater than otherwise allowed by the provisions of this Chapter. The City has determined that the uses and variations allowed pursuant to this Section are such that they have a unique, special or unusual impact upon the use or enjoyment of neighboring property. The authority of this Section is in addition to other provisions of this Chapter such as those pertaining to planned developments.

(2) Uses for which special permits may be secured, conditions that must be observed. and districts in which use will be allowed are:

USES	SPECIFIC CONDITIONS	DISTRICTS
Nursery, prekindergarten, kindergarten, play, special and other private schools, and day care for more than 12 children	At least 100 square feet of open play space must be provided for each child enrolled	Any
Hospital and nursing homes, educational, religious and philanthropic institutions and senior citizens public housing, public health facilities	Building may occupy not over 25% of lot and must be set back an additional two feet over usual yard requirements for each one foot building exceeds usual height limits. Off-street parking must be provided as required in Section 29.602.	Any
Cemetery and/or mausoleum	At least 20 acres in area for new cemeteries. A mausoleum shall be at least 200 feet from every street line and adjoining lot line.	R only

Dormitories, fraternities and sororities	For students of a college or university and when located within 300 feet of the main administrative building.	Any
Airport and landing field	Must have prior approval of Federal Aviation Agency	Any
Greenhouse and nurseries truck gardens and/or roadside stands	No greenhouse shall be closer than 25 feet to a lot that is residentially zoned.	R1A, R1B, R1C, R2 and R3
Mobile home parks, trailer camps or mobile subdivisions	All inhabited mobile homes or trailers shall be located in a mobile home park or trailer camp. The provision of Article X, Chapter 19, of this Code and other applicable ordinances or laws shall be complied with. Mobile home subdivisions must be subdivided as any other real estate and must satisfy the minimum yard requirements established hereunder or by the special permit, if specifically provided for.	RU, C and M only
Motels and hotels	Motels and hotels shall provide at least 1,000 sq. ft. of lot area for each unit. There must be at least 20' between buildings, but for purposes of this requirement a series of attached units comprising a continuous structure shall be considered as one building. Each unit shall contain at least 200 sq. ft. of floor area and provide heating, lavatory, toilet and tub or shower with hot and cold water. Plans and installation shall be subject to approval of Building Inspector and permits shall be valid only so long as the installations receive Building Inspector's approval as complying with these and other applicable state and municipal regulations.	C1B, C2, C3 only RU1, R1A when frontage upon a numbered highway.
Motels and hotels	None	C4 only
Outdoor theaters	Must be approved by the Highway Dept. when on or near a state highway.	C and M only

Private recreational and activities	None	RU1, C, M only
Mining and extraction of minerals or raw materials and the manufacturing, processing, treating and storing of materials or minerals, which are extracted from any portion of the district.	**(a)** No excavation, blasting or stock piling of materials shall be located within 100' of any public road or other property line. **(b)** All excavation slopes in excess of one to one shall be adequately fenced as to be determined by the Building Inspector. **(c)** Stripping of topsoil for sale or for use on other premises, except as may be incidental to a construction project and confined to the construction area, shall be prohibited in all districts. **(d)** Before approval of any new or extension to a sand, gravel or stone quarrying operation, a performance bond shall be secured from the applicant sufficient to ensure that upon completion of the extraction operations the abandoned quarry will be left in a safe, attractive and useful condition in the interest of public safety and general welfare. **(e)** A nonclimbable fence, a minimum of 6' in height, shall be installed around the quarry and all its operations as a safety device. Such fences shall be constructed of fine mesh in rectangular shapes, and the sizes of such rectangles shall not exceed two inches by four inches. **(f)** Access to the quarry shall not make use of established minor residential access streets. **(g)** Any crushing of rock or processing of material shall be done in such a way as to minimize the amount of airborne dust created. **(h)** The quarry and all its buildings, pits and processing equipment shall be effectively screened from the view of any adjoining property in a residential district with a fence or durable masonry wall 6' in height, or natural planting of comparable opacity at least 6' in height.	RU1

Parking Lots	**(a)** A special permit shall not be required for parking lots which are accessory to permitted uses, are located within the same zoning district as the permitted use and adjoin the principal use. **(b)** All open off-street parking areas and driveways shall be improved with a compacted road base, not less than 4” thick, surfaced with asphalt concrete or some comparable all weather dustless material. **(c)** All open automobile areas containing more than five (5) parking spaces shall be effectively screened on each side adjoining or fronting on any property situated in a residence district or any institutional premises by a wall, fence or densely planted compact hedge as provided in the permit. Such required screening shall conform with the front and side yard setback requirements of the district in which the parking is located. Planting screens or hedges shall not exceed 3’ in height where location is such that sight lines are necessary for vehicular movement across pedestrian ways. **(d)** The illumination of a parking lot shall be designed so that the light from lighting fixtures in the parking lot does not reflect direct rays or spill over in adjacent residential district. All parking lot lighting arrangements shall be installed as approved by the City Engineer. The following standards shall apply to all off-street parking lots, except as otherwise provided in the special permit: **(1)** All lighting fixtures shall not be placed higher than 15’ above the finished grade. **(2)** Fixtures shall be of the non-spill type, hooded to prevent glare. **(3)** Candle power per fixture shall not be less than 2.0 foot candles and not more than 3.0 foot candles measured at grade level under the fixture. **(e)** Finished grade and drainage shall be approved by the City Engineer.	RU, RE and R

Clinics	The building or buildings must not occupy more than one-third of the lot area, the yards are landscaped (i.e. not used for off street parking) and provided that the facility provides one off street parking space for each 200 sq. ft. of floor space in the building.	R2, R3
Undertaking establishments	An establishment wholly owned and operated by a person who is both a licensed funeral director and a licensed embalmer in accordance with the provisions of the Illinois Revised Statutes. The building or buildings must not occupy more than one third of the lot area, the yards are landscaped (i.e. not used for off-street parking) and provided that the facility provide for one off-street parking space for each 200 sq. ft. of floor space used for the conduct of the business.	R2, R3
Waste stabilization pond (lagoon)	Must be approved by the engineer and be a accordance with the state health requirements.	Any
Mobile home sales	Mobile home sales may be located on a lot subject to the specific conditions hereafter stated. For purposes of this Section, "mobile home" shall mean a structure designed for permanent habitation and so constructed as to permit its transport on wheels, temporarily or permanently attached to its frame, from the place of its construction to the location, or subsequent locations, at which it is intended to be permanent habitation and designed to permit the occupancy thereof as a dwelling place for one (1) or more persons. The following specific conditions shall apply: **(a)** That a site plan shall be prepared at a specific scale showing ingress and egress from a public street, the maximum number of mobile homes to be maintained, and the location	C1

	lay-out for mobile homes, artificial lighting, office, off-street parking, any pole or ground sign and any other improvements. **(b)** That there shall be a set-back from the front property line of not less than 25’ and a side-yard of 15’, except where adjacent to a residential district, in which each side-yard shall not be less than 25’ and a rear yard when adjacent to a residential district of not less than 25’. In the side and rear yards adjacent to residential areas screen plant material dense enough to reduce the view of mobile homes by 50% shall be installed, maintained and not permitted to grow over the property line. The plant material shall be of a disease resistance variety that will attain a height of not less than 10’. **(c)** That artificial lighting installed shall not adversely affect adjacent properties. **(d)** That all driveways, display lots and off-street parking areas shall be surfaced with a bituminous dust-free material or concrete. **(e)** That all hard surfaced areas shall be drained so as not to deposit surface water on adjacent properties. **(f)** That only one structure shall be permitted to be used for a sales office. **(g)** That there all be no assembly or repair of mobile homes on the lot. **(h)** That there shall be one automobile parking space for each three mobile homes on display plus one parking space for each employee. **(i)** That all advertising or display sign shall be located in accordance with the site plan and in compliance with the City of Quincy ordinance regulating signs	
Electric and gas substations	Non-climbable fences or comparable safety devices shall be installed and maintained in order to make the facility inaccessible to the general public. A hedge or other natural planting of comparable opacity, fence or wall may be required along any exterior property line which adjoins a residential district or a commercial office use.	RU1, RE1, RS, R1A, R1B, R1C, R2, R3, C1A, C1B, C2, C3

Club	Regulations governing and R2 and R3 districts apply. No parking allowed in a required front yard. Parking areas to comply with Section 29.602. It shall be permissible to serve food and meals on such premises, provided adequate dining room and kitchen facilities are available. The sale of alcoholic beverages shall be permitted only if specifically allowed by the special permit issued and if permitted be in compliance with the applicable federal, state, county and city laws.	RU1, RS, R1A, R1B, R1C and R2
Change from one non-conforming use to another (see Section 29.801(6))	The change must not be detrimental to or tend to alter the character of the neighborhood; the change must not increase congestion in the streets; and the change must be no less restricted than the existing use.	Any District
Enlargement, extension or structural alteration of non-conforming use, building or structure (see Section 29.801 (7)).	The enlargement, extension or structural alteration must not be detrimental to or tend to alter the character of the neighborhood; the enlargement, extension or structural alteration must not exceed the applicable bulk regulations for the district; the applicable off-street parking requirements must be complied with for the enlarged portion of the use; and there must be some compelling public necessity requiring such enlargement, extension or structural alteration.	Any District
Baseball park	The land area for a baseball park area shall not and be less than 5 acres. A site plan shall be prepared at a specific scale showing ingress and egress from a public street, diamond, bleacher area(s), office, concession area, off-street parking, artificial lighting, landscaping, any signs and any other improvements. That there shall be a set back from the front property line of not less than 25’ and a side-yard when located in or adjacent to residential district, a side-	RU1, C, and M only

	yard(s) not less than 25’ and a rear yard when adjacent to a residential district of not less than 25’ and a rear yard when adjacent to a residential district of not less than 25’. In the side and rear yards adjacent to a residential area there shall be installed a cyclone type wire fence with decorative slats not less than 5’ in height to protect the residential areas from any playing activities. That all driveways, display lots and off-street parking areas shall be surfaced with a dust-free material. That all hard surfaced areas shall be drained so as not to deposit surface water on adjacent properties. That only one structure shall be permitted to be used for an office. Off-street parking: One parking space shall be provided for each four seats plus additional spaces as may be required for affiliated uses as concession stands, etc. There shall be provided one parking space for each employee. That all advertising or display signs shall be located in accordance with the site plan and in compliance with City of Quincy ordinance regulating signs. The site plan shall be approved by the Illinois Department of Transportation when on or near a state highway.	
Roller skating rink and/or ice skating rink	The land area shall not be less than one acre. A site plan shall be prepared at a specific scale showing the location of the structure on the lot, an ingress and egress from a public street, off street parking any lighting, landscaping, signs and any other improvements. There shall be a setback for the front property line in compliance with the district in which it is to be located. If a setback is not required in the district, then there shall be a setback of not less than 25’. When adjacent to or within a residential district, there shall be a side-yard(s) not less than 25’ and a rear-yard when adjacent to a residential district of not less than 25’. In	RU1, C and M only

	the side and rear yards adjacent to residential areas, screen plant material dense enough to reduce the view of the roller skating rink by 50% shall be installed, maintained and not permitted to grow over the property line. The plant material shall be a disease resistant variety that will attain a height of not less than 10'. All driveways and off-street parking areas shall be surfaced with a dust-free material. Off-street parking: There shall be provided ten parking spaces for each 1,000 sq. ft. of floor area. All advertising or display signs shall be located in accordance with the site plan and in compliance with the City of Quincy ordinance regulating signs.	
Live (legitimate) Theatre	Affiliated uses including but not limited to a restaurant and barfacilities shall be included in the principle building and may be permitted. A site plan shall be prepared at a specific scale showing the location of the structure on the lot, any ingress and egress from a public street, off street parking, any lighting, landscaping signs and any other improvements. There shall be a setback from the front property here in compliance with the district in which it is to be located. If a setback is not required in the district, then there shall be a set back of not less than25'. When adjacent to or within a residential district, there shall be a side yard not 1ess than 25' and a rear yard when adjacent to a residential district of not less than 25'. In the side and rear yards adjacent to residential areas, screen plant material dense enough to reduce the view of the theater building by 50% shall be installed, maintained and not permitted to grow over the property line. The plant material shall be of a disease resistant variety that will attain a height of not less than 10'. All driveways and off-street parking areas shall be	C only

	surfaced with a dust-free material. Off-street parking: **Theater**: One parking space for each four seats up to 400 seats, plus one parking space for each six seats over 400 seats. **Restaurant**: One parking space for each 100 sq. ft. of floor area, plus one parking space for each employee. **Establishments dispensing beverages for consumption on the premises:** One parking space shall a provided for each 300 sq. ft. of floor area plus one parking space for each employee. All advertising or display signs shall be located in accordance with the site plan and in compliance with the City of Quincy ordinance regulating signs.	
Office uses including, but not limited to, business and professional offices	Special permits may be general or limited to one business or more particular office uses and a maximum number of owners, operators or employees.	R3
C1B permitted uses	Special permits may be general or 1imited to one or more particular uses and a maximum number of owners, operators or employees.	C1A
Unregistered non-conforming use (see Section 29.801(5)(a)).	The non-conforming use must have been conducted at least within the time periods prescribed by Section 29.801(8).	Any District
Non-conforming use (see Article VIII)	Any non-conforming use may be made a special use by the granting of a special permit, provided such non-conforming use lawfully exists pursuant to Article VIII.	Any District
Publicly owned and operated buildings, structures and properties (not specifically permitted)	None	Any R
Railroad yards	None	Any R

Skeet and gun clubs	**(a)** Adequate provisions must be made for preventing bullets or other projectiles from straying into any occupied areas or adjoining properties. **(b)** The area for the club shall be of sufficient size or distance from adjoining properties so that applicable state noise regulations are complied with and so that there will not be unreasonable amounts of noise to adjoining properties. Appropriate tests may a conducted to determine noise level.	RU1 and M
Towers	Building permit required if tower height exceeds limitations specified in Sections 29.202.	
Warehousing - storage	Such use as proposed shall be compatible with adjoining uses.	C2
Campgrounds	None	RU1 and RE
Adult uses	**(a)** An adult use may not be located within 500' of any pre-existing adult use; any not-for-profit school, community college, college or other similar education institution; any church or other place of worship; and residentially zoned areas; and building used by the United States, the State of Illinois or any unit of local government; any parks or play grounds; or any business which sells or dispenses in some manner alcoholic beverages. This restriction may, however, be waived by the City Council if: **(1)** The proposed use will not be contrary to the public interest or injurious to nearby properties; and the spirit and intent of this provision observed; **(2)** The proposed use will not enlarge or encourage the development of a "skid-row" or similar deteriorated area; **(3)** The establishment of an additional use of this type in the area will not be contrary to any program of	C2, C3, C4, and M1

neighborhood conservation or improvement, either residential or nonresidential; **(4)** The other applicable regulations of this Chapter are observed; **(5)** The owner of owners (as opposed to the occupants) of a majority of the property or properties within which such use may not be located (e.g. residentially zoned areas) consent in writing to such proposed use. For the purposes of these restrictions, measurements shall be made in a straight line, without regard to intervening structures or objects, from the property line of the adult use to the nearest property line of the other use. For purposes of the consent requirement provided above, the following specific rules shall apply: **(1)** The requisite majority shall require the consent of the owner or owners of the property or both the properties if there is one such property or there are two such properties, and any number more than 50% of such properties if there are more than two such properties. **(2)** The relative area of properties shall not be a consideration, but only the actual number of individual properties. **(3)** Each property considered shall be a zoning lot and not divisions or parts thereof. **(4)** Any property or properties owned or occupied by any person, firm or corporation interested, or to be interested, directly or indirectly, in the proposed adult use or the property at which it is to be located shall not be considered. Such interest may include among others, any interest as stockholder, partner, investor, sole proprietor, agent, employee, landlord or consultant. **(5)** In determining whether multiple owners of property consent to such use, the majority in interest (as opposed to a majority in number) will be determinative. **(6)** When title to real estate is conveyed after written consent is given, the consent shall remain valid unless withdrawn by a majority of the then owners. **(7)** A

consent may be withdrawn before a permit is approved by the City Council, but the applicant has a right to substitute new consents for those lost through withdrawal. **(8)** The consent requirement shall not be construed to vest the power to issue permits in landowners. The City Council retains the power to deny a permit event if the required consents are filed. Instead, the consent requirement is imposed because adult uses are considered as so potentially disturbing to the neighboring uses specified that additional limitations are warranted. **(b)** The adult use specifically permitted shall be limited to a single primary adult use, although the special permit may allow for other secondary adult uses. The primary adult use shall be one of those within the term “adult uses”. **(c)** Advertisements, displays, promotional materials or activities (other than an approved sign) shall not be shown, exhibited or undertaken so as to be visible to the public, from pedestrian sidewalks or walkways, or from other areas which are public or semipublic. **(d)** Any sign shall be approved by the City Council, shall contain only the actual name of the business, and shall not overhang any public street or sidewalk. **(e)** No building in which the use is located shall be painted in garish colors or in any other fashion as will effectuate the same purpose as a sign or advertisement. **(f)** Lobby and entrance areas must be designed so as to minimize obstruction of sidewalks during operating hours. **(g)** No loudspeakers or sound equipment shall be used in connection with the use that can be discerned by the public from pedestrian sidewalks or walkways, or from other areas which are public or semi-public. **(h)** In the event the adult use also involves a use which is licensed, such as the sale of alcoholic beverages, massage

establishments or theaters, such use shall at all times be properly licensed. **(i)** No unlawful activities may be conducted on the premises. **(j)** This provision shall not be construed to allow violation of any applicable laws, including but not limited to those pertaining to obscenity, indecent conduct (Section 31.104 hereof), or the sale of alcoholic beverages (Chapter 18 hereof).

EDITOR'S NOTE: Ordinance No. 8041provided the following transition provision:Transition: The provisions of this ordinance as they pertain to special permits for adult uses shall not apply to any adult use lawfully in existence at the time this ordinance takes effect, provided that such adult use continues to be conducted at the same location and in the same manner it was on the effective date of this ordinance, the ownership of the business or stock in the business conducting such use is not changed at any time thereafter to the cumulative extent of 50% or more, and the adult use is registered with the secretary of the Plan Commission within 90 days after the effective date of this ordinance. No charge shall be made for such registration. The form of registration shall be as prescribed by the secretary of the Plan Commission but shall set forth, at a minimum, the location, nature and ownership of such adult use. Upon being duly registered, a special permit for such use shall be issued. Except as otherwise provided in this Section, the special permit shall thereafter be subject to the provisions generally applicable to special permits, provided, however, without further approval, the use can be made to more conform with the requirements governing adult uses. In the event the location, nature or ownership of the adult use is changed as provided above, or such adult use is not registered, the right to

	continue such use shall automatically terminate. If and when requested by the secretary of the Plan Commission, the last known owner or owners of the use shall file an affidavit with the secretary of the Plan Commission setting forth any such changes relative to the use (e.g. ownership). If not provided within 30 days after a request therefore is made, the right to continue the use shall terminate and the special permit considered withdrawn. In the event of an extension of jurisdiction of the city's zoning authority, the same rules shall apply as to such use, but from the date such jurisdiction is effectively extended. Once the right to continue an adult use hereunder terminates, a special permit under the terms of said Section 29.203(2), as amended by this ordinance, shall be required. In the event an adult use also sells alcoholic beverages, such other use must be separately registered if a special permit would be required in the district involved. Such other registration shall not be deemed to allow the continuance of the adult use beyond the period allowed by this Section. Instead, each respective use shall be governed by their separate transition provisions.	
Sale of alcoholic beverages	**(a)** The sale of alcoholic beverages may not be located within 500’ of any pre-existing district use for the sale of alcoholic beverages; and not-for-profit the school, community college, college or other similar educational institution; any church or other place of worship, any residentially zoned areas; any building used by the United States, the State of Illinois or any unit of local government; or any parks or playgrounds. This restriction may, however, be waived by the City Council if: **(1)** The proposed use will not be contrary the public interest or injurious to nearby properties, and the spirit and intent of this provision observed; **(2)** The proposed use will not	NR2 and C1B and other district in which the sale of alcoholic beverages is incidental and secondary to a primary use, including but not limited to colleges, country clubs

enlarge or encourage the development of a "skid-row" or similar deteriorated area; **(3)** The establishment of an additional use of this type in the area will not be contrary to any program of neighborhood conservation or improvement, either residential or non-residential; and, **(4)** The other applicable regulations of Chapter are observed **(b)** Such business must be properly licensed.**(c)** No illegal activities may be conducted on the premises. **(d)** This provision shall not be construed to allow violation of any applicable laws including, but not limited to those pertaining to the sale of alcoholic beverages. The issuance of a special permit shall further not be construed to allow the sale of alcoholic beverages without the requisite license such as that required by Chapter 18 of the Municipal Code of the City of Quincy or other applicable laws or ordinances.

and golf courses except by special permit, the sale of alcoholic allowed as a primary use in districts of a higher classification than C1B such as C1A, and all residential districts.

EDITOR'S NOTE: Ordinance No. 8041 provided the following transition provisions: Transition: The provisions of this ordinance as they pertain to special permits for the sale of alcoholic beverages shall not apply to any business lawfully licensed and actually selling alcoholic beverages at the time this ordinance takes effect, provided that such use continues to be conducted at the same location and in the same manner it was on the effective date of this ordinance, and the use is registered with the secretary of the Plan Commission within 90 days after the effective date of this ordinance. No charge shall be made for such registration. The form of registration shall be as prescribed by the secretary of the Plan Commission but shall set forth, at a minimum, the location and nature of such use. Upon being duly registered, a special permit for such use shall be issued. Except as otherwise provided in this section, the

	special permit shall thereafter be subject to the provisions generally applicable to special permits, provided, however, without further approval, the use can be made to more conform with the requirements governing the sale of alcoholic beverages. In the event the location or manner of the use is changed as provided above, or such use is not registered, the right to continue such use shall automatically terminate. In the event of an extension of jurisdiction of the city's zoning authority, the same rules shall apply as to such use, but from the date such jurisdiction is effectively extended. Once the right to continue the sale of alcoholic beverage hereunder terminates, a special permit under the terms of said Section 29.203(a), as amended by this ordinance, shall be required. The conduct of a business for the sale of alcoholic beverages is expressly permitted notwithstanding the sale or transfer of the business. To better give effect to this Section, the secretary of the Plan Commission may notify in writing all holders of a liquor license under Chapter 18 of the Municipal Code of Quincy of the registration requirements of this ordinance.	
Bed and breakfast	**a)** Applicants shall submit a floor plan of the dwelling unit illustrating that the proposed operation will comply with the city zoning ordinance as amended, other applicable city codes and ordinances, and within the provisions of this Section. **(b)** The Quincy Fire Dept. and Building Inspection Office shall be contacted in order that the building can be inspected for compliance with all city building and fire**(**prevention codes, all related ordinances and the State of Illinois Life Safety Code. The inspection shall include, but shall not be limited to, the proper number and type of exits, open staircases, emergency lighting and installation of smoke detectors. **(c)** Lavatories and bathing facilities shall be	Any

available to all persons using any bed and breakfast operation and shall comply with all city and state plumbing and electrical codes. **(d)** Two (2) off-street parking spaces plus (1) additional space per room to be rented must be provided. Tandem parking is allowed; however, not more than two (2) cars per space shall be allowed. All parking spaces shall be paved. If the applicant is unable to meet this condition, the applicant may request special consideration from the Plan Commission. The city's intent is to discourage yards from being destroyed, landscaping removed or the integrity of the neighborhood altered in order to provide parking. In such a case the applicant shall submit an analysis of parking required and parking provided within a 300 foot radius of the subject parcel. After review, the Plan Commission may recommend lowering the number of the required parking spaces based on the fact that, sufficient parking exists in the neighborhood. **(e)** A non-internally illuminated identification sign, not exceeding 4 sq. ft. may be mounted flat against the wall of the principle building. **(f)** The dwelling unit in which the bed and breakfast operation takes place shall be the principle residence of the operator/owner and said operator/owner shall live on the premises when the bed and breakfast operation is active. **(g)** The bed and breakfast sleeping room(s) shall occupy no more than a total 25% of the dwelling unit floor area. If the applicant is unable to meet this condition, the applicant may request special consideration from the Plan Commission. **(h)** The maximum consecutive stay for any occupants of bed and breakfast operations small be 90 days Each operator shall keep a list of all persons staying at the bed and breakfast establishment for purposes of verification of this subsection. Such list shall be available for inspection by city officials at any time.

Storm-Water Retention/ Detention areas and facilities	A special permit shall be required for the placement of storm-water retention/ detention areas or facilities in resident al districts which are adjacent to or which benefit developments located in commercial or industrial districts. Fencing and landscaping of such storm-water retention/ detention areas shall be required as needed to ensure the safety and aesthetic appeal of adjacent residential areas.	Any
Animal Crematoriums	Animal crematoriums shall be located at least 100' from a property boundary in the M1 district, 200' from a property boundary in the C2 district and 300' from any property line in an RU1 district	RU1, C2, M1

(3) **Standards**: No special use shall be recommended by the Plan Commission unless said Commission shall find:

(a) That the establishment, maintenance or operation of the special use will not be unreasonably detrimental to or endanger the public health, safety, morals, comfort or general welfare.

(b) That the special use will not be injurious to the use and enjoyment of other property in the immediate vicinity for the purpose already permitted, nor significantly diminish and impair property values within the neighborhood.

(c) That the establishment of the special use will not impede the normal and orderly development and improvement of surrounding property for uses permitted in the district.

(d) That adequate utilities, access roads, drainage and/or other necessary facilities have been or are being provided.

(e) That adequate measures have been or will be taken to provide ingress and egress so designed as to minimize traffic congestion in the public streets.

(f) That the special use shall in all other respects conform to the applicable regulations of the district in which it is located, except as such regulations may in each instance be modified by the City Council pursuant to the recommendations of the Plan Commission.

(g) That the special use shall in all respects also conform to the applicable regulations of the district in which if located it would be a permitted use, except as to such regulations may in each instance be modified by the City Council pursuant to the recommendations of the Plan Commission.

(4) **Conditions and guarantees**: Prior to granting any special use, the Plan Commission may recommend, and the City Council shall stipulate, such conditions and restrictions upon the establishment, location construction, maintenance and operation of the special use as deemed necessary for the protection of the public interest and to secure compliance with the standards and requirements as specified herein, or as may be from time to time required. In all cases in which special uses are granted, the City Council shall require such evidence and guarantees as it

may deem necessary as proof that the conditions stipulated in connection therewith are being and will be complied with. All such conditions, guarantees and the applicable specific conditions set forth in subparagraph 29.203(2), above, must be fully complied with prior to the use being commenced. If such conditions, guarantees or specific conditions are not complied with, the use shall be immediately terminated. The City Council may also revoke any special permit for a failure to comply.

(5) **Limitation of special permit**: It is the responsibility of all applicants for special permits to submit complete and thorough plans relative to any specially permitted use. This is particularly important relative to the exterior of any building. Any use, activity or items not clearly incidental to or implied from the specially permitted use shall not be allowed. What is clearly incidental to or implied shall be strictly construed. Use, activity or items shall include, but not be limited to, lighting, signs and parking arrangements.

(6) **Procedures**:

(a) **Application**: The form of application for a special permit shall be prescribed by the secretary of the Plan Commission, but shall include such requirements as may be imposed by the Plan Commission or the City council, if any. All applications for special permits shall be filed with the secretary of the Plan Commission. The application shall be accompanied by eight (8) copies of a detailed plot plan of the lot and proposed use, drawn to an accurate scale by a person competent therein, showing all pertinent information. It is the responsibility of all applicants for special permits to submit complete and thorough plans relative to any specially permitted use. This is particularly important relative to the exterior of any building or structure. Any use, activity or items not clearly incidental to or implied from the specially permitted use shall not be allowed. What is clearly incidental to or implied shall be strictly construed. Use, activity or items shall include, but shall not be limited to, landscaping, lighting and parking arrangements. The secretary of the Plan Commission may also require submission of a proposed form of special permit.

(b) **Review by Plan commission**: The Plan Commission shall conduct a public hearing on the application to be held within sixty (60) days from the date of the receipt of the application by the secretary of the Plan Commission. After the hearing on the application, the Plan Commission shall file a report with the City Council. The Plan Commission shall have sixty (60) days following the filing of the application to hold a hearing and submit its report. If a report is not filed with the City council within sixty (60) days, it may be assumed by the City Council that the Plan Commission approved the application, providing a hearing has been held. In its review, the Plan Commission shall consider the standards and conditions set forth in this Section as well as any other pertinent matters.

(c) **Notice of hearing**: The Plan Commission shall cause to be published public notice of the hearing on each proposed special permit at least once, not less than fifteen (15) days nor more than thirty (30) days before such hearing, in a newspaper published within the City of Quincy. The notice shall contain the date and location for which the public hearing, the subject property for which the special permit is requested, a brief statement of the use for which the special permit is being requested and shall state that every person in attendance at the hearing shall have an opportunity to be heard, that every “Interested Party” (as defined under Article I of Chapter 29 of the Municipal Code) shall have the right to cross-examine others at the hearing, provided that such Interested Party enters his or her appearance with the Department of Planning and Development no later than three (3) business days before the date of the public hearing. In

addition to providing public notice by publication, the Department shall post a sign at the subject property advising the public of the requested action; such sign shall be posted not less than fifteen (15) days prior to the public hearing.

(d) **Notice to property owners**: The applicant shall not less than fifteen (15) days before the date of the public hearing, serve written notice, either in person or by registered or certified mail, return receipt requested, on at least one owner of each property within 250' in each direction of the lot line of the subject property unless waived by the Plan Commission or City Council. Ownership shall be based solely on the tax records of Adams County. The number of feet occupied by all public roads, streets, alleys or other public ways shall be excluded in computing the 250' requirement; provided further that in no event shall this requirement exceed 400', including public streets, alleys and other public ways. Said notice shall contain the same information as is required under subparagraph (6)(c) above for the public hearing notice. If, after a bona fide effort to determine such address by the applicant, the owner of the property on which notice is served cannot be found at his or its last know address, or the mailed notice is returned because the owner cannot be found at the last known address, the notice requirements of these provisions shall be deemed satisfied. Proof of giving notice hereof by affidavit shall be filed with the secretary of the Plan Commission. A failure to comply with the provisions of this subsection shall not affect or invalidate the issuance of a special permit and additionally may be waived by the City Council or Plan Commission.

(e) **Issuance**: After receiving the recommendations and report of the Plan Commission, the City Council may grant the proposed special permit, with or without change, may eject it, may recommit it to the Plan Commission for further consideration, or take other appropriate action. The special permit shall be issued by the secretary of the Plan Commission if and as a proved by the City Council. Such special permit shall be subject to such terms and conditions as required by the City Council and otherwise by this Chapter. Such terms and conditions may exceed those otherwise contemplated herein if deemed necessary for the protection of the public interest and to secure compliance will the standards and requirements specified herein or as may be from time to time required.

(f) **Continuation of hearing**: After notice of a scheduled hearing has been published, or served on adjoining property owners, as provided herein, such hearing may be continued or withdrawn only upon approval of the Plan Commission. A request by an applicant for continuation or withdrawal may only be granted for good cause. Any such request must be made in person to the Plan Commission or in writing setting forth the reasons for the request. Notwithstanding any such request, the Plan Commission shall have the discretion to: grant the request; deny the request and hold any required public hearing and make a recommendation to the City Council regarding the subject application; or grant a continuance and defer taking any final action, but proceed with any required public hearing. In addition, and notwithstanding the foregoing, if an applicant (who has otherwise failed to previously request a continuation or withdrawal of an application) fails to appear at the scheduled hearing, the application may be denied by the Plan Commission with or without any required public hearing and such denial reported to the City Council.

(g) **Fees**: Except in those cases where a special permit is requested by the city, a fee of $200.00 shall be paid to the city to defray the costs of publishing and posting notice of the proposed special permit and the costs of maintaining a record of the public hearing.. Such fee shall be paid to the secretary of the Plan Commission.

(7) **Multiple special permits**: In the event two (2) or more uses or activities are conducted on premises requiring special permits, a separate special permit shall be required for each such use or activity.

(8) **Change in or additions to use**: An amendment to a special permit shall be sought in the event there is proposed any material change in or addition to a specially permitted use or any matters related to the same. An amendment to a special permit shall be sought in the same manner as an original special permit. Without in any way limiting the requirement of obtaining an amendment to a special permit, a material change or addition in a specially permitted use shall be deemed to occur if there is or will be a change in or addition to a use, activity or items not clearly incidental to or implied from the specially permitted use. What is clearly incidental to or implied from shall be strictly construed. Use, activity or items shall include, but not be limited to lighting, signs, parking arrangements, size of any structure, change in access, an increase or amplification of the intensity of such use, and an increase in that portion of a tract occupied by the use.

(9) **Permits run with land**: All special permits run with the land unless they shall otherwise provide. The right to conduct the specially permitted use is, accordingly, incident to the ownership of the premises to which it pertains. A specially permitted use may be rebuilt if damaged or destroyed. However, in all events, the use shall be subject to the terms and conditions of this Article and the special permit.

(10) **Effect of denial of special permit**: After a public hearing has been held and a special permit denied in whole or part by the City Council, an application for the same special permit or a permit which is substantially or materially the same as the denied permit shall not be resubmitted for a period of one (1) year from the date of such denial, unless allowed by the City Council. In general, resubmission shall be allowed only if there is substantial new evidence or proof of changed conditions found to warrant resubmission.

ARTICLE III MINIMUM & MAXIMUM HEIGHT LIMITS ARE ESTABLISHED

Section 29.301 <u>Terms relating to "height" are defined</u> ---

(1) A basement has less than one-half (1/2) its height below grade; a cellar has more than one-half (1/2) its height below grade. If a basement is subdivided and used for dwelling purposes it is counted as a story, a cellar is not.

(2) The height of a building is the vertical distance from the grade to:

(a) The highest point of a flat roof;

(b) The deck line of a mansard roof; or

(c) The mean height between eaves and ridge for gable, hip, and gambrel roofs.

(3) Grade is the average level of the finished surface of the ground for buildings more than 5' from a street line. For buildings closer than 5' to a street, the grade is the sidewalk elevation at the center of the building. If there is more than one street, an average sidewalk elevation is to be used. If there is no sidewalk, the City Engineer shall establish the sidewalk grade.

29.302 <u>Except as provided in Section 29.303, buildings (including any tower or towers located on the roof or top thereof) shall not exceed the following height limits</u>

(1) 40' above grade in C3 and N3 districts, provided however, that one (1) or more structures in the C3 district having a total maximum area on any floor not in excess 10% of the total area of the shopping center lot and which structures are located not less than 100' from all streets and property lines, may be erected to a height of not more than 120'; and provided further, that a sign, spire or tower that is used solely for ornamental or decorative purposes, the base area of which does not exceed 1% of the first floor area of the building to which it is attached, may be erected to any height.

(2) 35' above grade in RU1, RE1, RS, R1A, R1B, R1C, R2, R3, C1A and C1B districts.

(3) 45' above grade in the NR1, NR2 and C2 districts.

(4) 60' above grade in the M1 district.

(5) 75' above grade in the M2 district.

29.303 <u>Above height limits may be exceeded in the following instances</u> ---

(1) If a public building, church, temple, hospital, institution or school is set back an additional foot over the yards required in Article IV, it may be increased in height 2' over the height limit of Section 29.302 up to a limit of 70'.

(2) Chimneys, church steeples, cooling towers, elevator bulkheads, fire towers, monuments, stacks, stage towers or scenery lofts, tanks, water towers, ornamental towers, spires, wireless towers, grain elevators or necessary mechanical appurtenances may be erected to a height of now or hereafter provided by ordinance.

(3) Storage buildings are exempt from the story limitation (but not the "number of feet limitation).

(4) Single-family dwellings, two-family dwellings and multiple dwellings may be increased in height by not more than 10' when the side and rear yards are increased over the yard requirements of the district in which they are located by not less than 10', but they shall not exceed three (3) stories in height.

29.304 <u>Height violations not to be reconstructed</u> --- Those parts of existing buildings that violate height regulations may be repaired and remodeled but may not be reconstructed or structurally altered.

29.305 <u>Living in basement prohibited</u> --- No living unit may be located entirely in a basement or cellar, except however, that a living unit may be located in a basement or cellar outside the limits of the City of Quincy for a period of two (2) years after the date of issuance of a building permit for said living unit.

ARTICLE IV MINIMUM YARDS ARE ESTABLISHED

Section 29.401 **Generally** --- The provisions hereof shall govern yard requirements and related matters.

Centerline: A line halfway between the street lines.

Frontage: The distance along a street line from one intersecting street to another or from one intersecting street to the end of a dead end street.

Main building: The building occupied by the primary use.

Width, buildable: The width of lot left to be built upon after the side yards are provided.

Width, lot: The width of a lot at the front yard line.

Yard: An open space, on the same zoning lot with a building or structure, unoccupied and unobstructed from is lowest level to the sky. Except as otherwise permitted herein, "yard" extends along a lot line and to a depth or width specified in the yard requirements for the zoning district in which such zoning lot is located.

Yard, front: A yard extending along the full length of the front lot line between the side lot lines (and not side yards lines).

Yard, rear: A yard extending along the full length of the rear lot line between the side lot lines (and not side yards lines).

Yard, side: A yard extending along a side lot line from the front yard to the rear yard.

Yard, corner side: A side yard which faces a public street.

Yard, interior side: A side yard which is located immediately adjacent to another zoning lot or to an alley separating such side yard from another zoning lot.

29.402 **Except as provided in Section 29.403 and Article VII, yards shall be provided for buildings as shown in the following tabulation** ---

DISTRICT	ONE FRONT YARD OF	TWO SIDE YARDS OF	ONE REAR YARD OF
RU1	50 feet	20 feet	50 feet
RE1	25 feet	5 feet	25 feet
RS	40 feet	12 feet	50 feet
R1A	30 feet	10 feet	30 feet
R1B	25 feet	7.5 feet	30 feet
R1C	25 feet	5 feet	30 feet
R2	25 feet	5 feet	25 feet
R3	25 feet	5 feet	25 feet
C1A	25 feet	none	25 feet
C1B	25 feet	none	none
C2	25 feet	none	none
C3	120 feet	none	40 feet
M1	25 feet	none	none
M2	25 feet	none	none
M3	30 feet	20 feet	20 feet

No yard requirements shall apply to the NR1 and NR2 districts except as follows:

(1) Where a NR1 or NR2 district adjoins, another zoning district, no building shall be located nearer to such district division line than the side yard or rear yard provisions applicable to such other district, as appropriate, to the development in the NR district and what would otherwise be the side yard or rear yard.

(2) Where a NR1 or NR2 district adjoins or a zoning lot fronts on a street, no building shall be located nearer to such street than 25'.

29.403 <u>These general rules for yards must also be observed</u> ---

(1) On lots fronting on two nonintersecting streets a front yard must be provided on both streets.

(2) On corner lots in the R districts the width of the yard along the side street shall not be less than any required front yard on such street. On corner lots that are lots of record the buildable width cannot be reduced to less than 28' except that there shall be a yard along the side street side of such a tract of at least 5' as well as the required side yard on the other side.

(3) On corner lots in the C, MI or M2 districts that rear upon a R district, a ten (10) foot yard must be provided along the side street side.

(4) Where a frontage is divided among districts with different front yard requirements, the deepest front yard shall apply to the entire frontage.

(5) Where a side or rear yard in a commercial district is adjacent to a residential district, such yard shall have a width or depth of 15' and provide sight proof landscaping and/or fencing to screen the use from adjacent properties as approved on a site plan per requirements in Article XV.

(6) Where a side or rear yard in a manufacturing district is adjacent to a residential district, such yard shall have a width or depth of 50' and provide sight proof landscaping and/or fencing to screen the use from adjacent properties as approved on a site plan per requirements in Article XV.

(7) In the C and M districts there may be more than one commercial or industrial building on a lot provided that the required yards be maintained around the group of buildings.

(8) Dwelling uses, except hotels, locating in C and M districts must provide the yards required in the R3 district.

(9) There may be two or more related multi-family, hotel, motel, or institutional buildings on a lot; provided that:

(a) The required yards be maintained around the group of buildings, and

(b) Buildings that are parallel, or that are within 45 degrees of being parallel, be separated by a horizontal distance that is at least equal to the height of the highest building.

(c) Where a multi-family development is adjacent to single-family residential uses, all buildings of such multi-family development shall be set back from the property limits at least 30'.

(10) Where a lot in the M2 district is adjacent to a lot in an R district, the building shall be set back from such a lot line one foot for each 7' of building height.

(11) Those parts of existing buildings that violate yard regulations may be repaired and remodeled but not reconstructed or structurally altered.

(12) On corner lots (lots abutting on 2 or more streets at their intersections) the front yard shall face the shortest street dimension of the lot except that if the lot is square or almost square, i.e. has dimensions in a ratio of 3:2 to 3:3, then the front yard may face either street.

(13) For the purposes of the side yard requirements, a two-family or a multiple dwelling shall be considered as one building occupying one lot.

(14) Motor vehicles, boats, trailers, campers and the like shall not be parked. located or stored in required front yards, provided, however, that passenger automobiles and pick up trucks or vans of class A shall be allowed as that term is defined for purposes of the Illinois Motor Vehicle Code if parked or located on a driveway for only temporary periods of time and in no event more than 24 consecutive hours. This provision shall not be construed to permit parking spaces contrary to Subsection 29.603(2).

(15) Drive - thru lanes used for commercial and business purposes are not permitted in the required front, back or side yard set back. This requirement shall exclude residential driveways.

20.404 <u>The following exceptions may be made in yard regulations</u> --

(l) On lots of record the side yard may be reduced to 10% of the tract width but not less than 5' in the RS or R1A district and 3' in all other districts.

(2) On lots of record the rear yard may be reduced to 20% of the tract depth.

(3) Where, on the effective date of August 23, 1963, 40% or more of a frontage was occupied by two (2) or more buildings, then the front yard is established in the following manner:

(a) Where the building furthest from the street provides a front yard not more than 10' deeper than the building closest to the street, then the front yard for the frontage is and remains an average of the then existing front yards.

(b) Where this (a) is not the case and a lot is within 100' of a building on each side, then the front yard is a line drawn from the closest front corners of these two adjacent buildings.

(c) Where neither (a) or (b) is the case and the lot is within 100' of an existing building on one side only, then the front yard is the same as that of the existing adjacent building.

(4) Sills, belt courses, cornices, and ornamental features may project only one foot into a required yard.

(5) Open fire escapes or lattice-enclosed fire escapes, fireproof outside stairways and balconies opening upon fire towers projecting into a rear yarn for a distance of not more than 5' when so placed as to not obstruct light and ventilation and the ordinary projections of chimneys and flues, may be permitted by the Building Inspector.

(6) Decks may project into the rear yard requirement 15'.

(7) No side yards are required for dwellings which are erected above commercial and industrial structures.

(8) If side yards are provided where not required (i.e. in C and M districts) they must be at least 5' wide.

29.405 <u>The following special building lines are hereby established</u> --- Irrespective of the previous provisions of this Article, no building may be erected or structurally altered closer than 40' to the centerline of the street on Twelfth Street from Broadway to the north city limits, on Thirtieth Street from Maine to Turner Road, on Thirty-sixth Street from State Street to Locust Street and on Locust Street from Twenty-fourth to Thirty-sixth Street.

ARTICLE V MINIMUM LOT AREAS AND WIDTHS ARE ESTABLISHED

Section 29.501 **Table of minimums** --- Except as provided in Section 29.502, there shall be the minimum lot width, minimum lot area and minimum lot area per family as shown on the following table.

District	Lot Width in Feet	Lot Area In Square Feet	Lot Area Per Family In Square Feet: Single Family Dwellings	Two Family Dwellings	Multiple Dwelling
RU1	150	43,560	43,560	*	*
RE1	50	5,000	5,000	*	*
RS	100	20,000	20,000	*	*
R1A	90	10,000	10,000	*	*
RIB	75	8,000	8,000	*	*
RIC	60	6,000	6,000	*	*
R2	60	6,000	6,000	3,000	*
R3	60	5,000	5,000	2,500	1,500
CIA	none	none	5,000	2,500	*
C1B	none	none	5,000	2,500	1,500
C2	none	none	6,000	3,000	1,500
C3	none	none	10,000	10,000	10,000
M1	none	none	*	*	6,000
M2	none	none	*	*	*
M3	none	none	*	*	*

*Indicates not permitted in district

With regard to the NR1 and NR2 districts, see Section 29.202(6)(d) regarding density restrictions. Minimum lot areas and widths do not apply in the NR districts.

29.502 **Uses of substandard lots** --- Lots of record with less area or width than above required may be used for one single-family dwelling or for a permitted non-dwelling use.

29.503 **Reconstruction of violations prohibited** --- Existing buildings that are in violation of lot area requirements may be remodeled or repaired but may not be reconstructed or structurally altered unless made to conform to these requirements.

ARTICLE VI OFF-STREET PARKING AND LOADING

Section 29.601 <u>Purpose</u> --- It is the purpose and intent of this ordinance that off-street parking and loading areas be provided and adequately maintained in every zoning district for the purposes of promoting safe and efficient parking of motor vehicles; to avoid unnecessary congestion and interference with public use of streets; and to protect and preserve the appearance, character, and value of the surrounding neighborhoods.

29.602 <u>Off-street parking and loading general provisions</u> ---

(1) In all zoning districts, off-street parking and loading requirements shall be provided in amounts not less than specified for the various districts.

(2) The Director of Planning and Development, after consultation with the City Engineer, shall make a determination, in the cases of uses not listed in Section 29.603 of the minimum required off-street parking spaces.

In reaching the determination, the Director of Planning and Development and the City Engineer, shall be guided by the requirements for similar uses, the number and kind of vehicles likely to be attracted to the proposed use and studies of the parking requirements of such uses in other jurisdictions.

The Director of Planning and Development may approved alternative parking standards in situations where an applicant can sufficiently demonstrate that a particular situation is unusual, unique, or poses practical difficulty, and upon submission of adequate technical justification such as independent parking analysis, Urban Land Institute (ULI) or Institute of Transportation Engineers (ITE) parking standards, or similar justification.

(3) Additional parking shall be provided and maintained in proper ratio to any increase in floor area or building use capacity.

(4) For the purposes of determining off-street parking and loading requirements, the following provisions shall apply:

(a) "Usable floor area" as applied to offices, merchandising or service types of uses, shall mean the floor area used or intended to be used for services to the public as customers, patrons, clients, patients, or tenants, including areas occupied by fixtures and equipment used for display or sale of merchandise, but excluding floor areas which are used exclusively for storage, for housing of mechanical equipment integral to the building, for maintenance facilities, stairwells, restrooms, or for those areas so restricted that customers, patients, clients, salesmen, and the general public are denied access. Measurement of useable floor area shall be the sum of the horizontal area of each story of a structure measured from the interior faces of the exterior walls.

(b) Where benches, pews or other similar seating facilities are used as seats, each 24" of such seating facilities shall be counted as one seat.

(5) In the case of mixed uses in the same building at the same time, the total requirements for off-street parking and loading shall be the sum of the requirements for the separate individual uses computed separately

(6) Joint or collective provision of off-street parking for buildings or uses on two or more properties shall not be less than the sum of the requirements for the participating individual uses computed separately.

(7) It shall be unlawful to use any of the off-street parking or loading areas established to meet the requirements of this ordinance for any purpose other than the parking of licensed vehicles or the loading and unloading of necessary service trucks.

(8) Off-street parking shall be no closer to any principal building than 5'. Bumper guards shall be installed to prevent yard encroachment.

(9) In the R districts and in C and M districts within 50' of an R district, no parking space may be located in a front yard.

(10) Parking spaces may be provided in side and rear yards in the R districts and in any yard in C and M districts except that in the C and M districts no parking space may be provided in a front yard unless the building is set back at least 30' from the street, and further provided that the parking use must conform to the permitted land use for the district.

(11) Parking spaces for any use specifically permitted in an R district may be provided on a lot adjoining that use provided there is compliance with all the requirements of Subsection (9) and (10) of Section 29.602.

(12) Where parking is provided in a commercial district adjacent to a residential district or where five or more parking spaces are provided for use in a residential district adjacent to a residential district, all parking spaces, loading spaces and drives, shall be set back from the residential district 15'. This setback shall be a landscaped area providing sight proof landscaping and/or fencing to screen the use from adjacent properties as approved on a site plan per requirements in Article XV.

(13) Where parking is provided in a manufacturing district adjacent to a residential district, all parking spaces, loading spaces and internal drives except for fire lanes, ingress and egress, shall be set back from the residential district 30'. This setback shall be a landscaped area providing sight proof landscaping and/or fencing to screen the use from adjacent properties as approved on a site plan per requirements in Article XV.

(14) When determination of the number of off-street parking spaces or loading spaces required by this ordinance results in a requirement of a fractional space, any fraction in excess of one-half shall be counted as one parking space; any fraction of one-half or less may be disregarded.

(15) No repairs or services to vehicles shall be carried on or permitted in off-street parking areas.

(16) No vehicular display for purpose of sale shall be carried on or permitted upon such premises unless such display is by a licensed automobile dealer on a properly zoned parcel.

(17) In the Residential District, the only off-street parking permitted is that parking which is an accessory use to the primary residential dwelling. The use of an off-street parking lot in a residential district by a nearby or adjacent to a commercial use is prohibited.

(18) Off-street parking required for enlargements or change of use. Existing buildings not complying with off-street parking requirements may be remodeled, repaired and structurally altered, but any enlargement or change of use of a structure or building which would require a greater number of parking spaces than was required for the prior use must provide the required parking spaces for such enlargement or use.

29.603 Off-street parking requirements --- The minimum number of off-street parking spaces, including garage parking spaces, by type of use shall be determined in accordance with the following schedule.

USE	MINIMUM NUMBER OF STANDARD OFF-STREET PARKING SPACES PER UNIT OF MEASURE
1. <u>Residential and Housing Uses</u>	
(a) Bed and Breakfast	One space per guest room, plus two spaces for residents.
(b) Boarding House	One space per guest room, plus two spaces for residents.
(c) Dormitory	One space for each three persons in residence.
(d) Fraternity or Sorority	One space for each three persons in residence.
(e) Group Homes, Halfway Houses, Community Living Facilities	One space for each two beds plus one space for each employee.
(f) Homes for the aged and convalescent homes	One space for each four beds, plus one space for each employee.
(g) Mobile Home Parks	Two spaces for each dwelling unit.
(h) Residential, Multiple-family	Two spaces for each dwelling unit.
(i) Residential, One-family and Two-family	Two spaces for each dwelling unit.
2. <u>Institutional And Cultural</u>	
(a) Churches, temples or buildings of similar use	One space for each three seats.
(b) Elementary and Junior High School	One space for each one teacher and administrator, in addition to the requirements of the auditorium and/ or similar places(s) of assembly.
(c) Libraries, museums and post office buildings	One space for each 800 sq. ft. of usable floor area.
(d) Lodge halls, meeting halls, and community centers or buildings similar use without fixed seats	One space for each five persons of legal capacity as established by local, county, or state fire building or health codes.
(e) Pre-school child care (day nurseries)	One space for each employee. Sufficient area shall be set aside for

	dropping-off and picking up children in a safe manner that will not cause the children to cross the parking area or lines of traffic.
(f) Public office building not elsewhere specified	One space for each 300 sq. ft. of usable floor area, plus one space for each employee employed therein.
(g) Senior high schools, vocational schools and community colleges	One space for each one teacher and administrator and one space for each ten students, in addition to the requirements of the auditorium and/ or similar place of assembly.
(h) Theaters and auditoriums	One space for each four seats.

3. <u>Business and Commercial</u>

(a) Assembly halls, without fixed seats, for commercial recreation including dance halls, pool or billiard parlors, skating rinks, and exhibition halls or buildings for similar assembly uses	One space for each 50 sq. ft. of usable floor area.
(b) Auction House	One space per two seats or two per 100 sq. ft. of gross leasable area, whichever is greater.
(c) Auto Body Shop	One space per service bay and one space per employee.
(d) Automobile service stations	Two spaces for each lubrication stall, rack or pit, and one space for each employee.
(e) Auto Parts Store	One space per 200 sq. ft. of usable floor area, plus one space for each employee.
(f) Auto Rental	One space per 400 sq. ft. of gross floor area.
(g) Auto Wash (Automatic)	One space for each one employee. In addition, adequate waiting space for autos shall be provided on the premises to accommodate 50% of the hourly rate of capacity.
(h) Auto Wash (Self Serve)	One space for each one employee. In addition, adequate waiting space for autos shall be provided on the premises to accommodate 50% of the hourly rate of capacity.

(i) Bait Shop	One space per 200 sq. ft. of usable floor area.
(j) Beauty parlor or barber shop	Two spaces per beauty or barber chair.
(k) Convenience Store	One space for each 200 sq. ft. of usable floor area plus one space per employee.
(l) Drive-in restaurants or similar drive-in uses for sale of beverages, food or refreshments	One space for each 15 sq. ft. of usable floor area, plus one space for each one employee on the largest work shift.
(m) Drive-through facility (see also Restaurant and Bank Drive-Through)	For uses not mentioned with drive-through windows, provide a minimum of three stacking spaces for each drive-through window. Each line of stacking space must be at least 9' wide and must be delineated with pavement markings. Such spaces shall be designed so as not to impede pedestrian or vehicular circulation on the site or on any abutting street.
(n) Dry Cleaning	Three spaces plus one space for each 500 sq. ft. of gross floor area in excess of 1,000 sq. ft.
(o) Furniture and appliance stores; household equipment repair shops; showroom of a plumber, decorator, electrician or similar trade; shoe repair and other similar uses	One space for each 400 sq. ft. of usable floor area. (For that floor area used in processing, one additional space shall be provided for each two persons employed therein.)
(p) Laundromats and coin operated dry cleaners	One space for each two washing machines.
(q) Mortuary establishments	One space for each 50 sq. ft. of usable floor space.
(r) Motel, hotel or other commercial lodging establishments	One space for each one occupancy unit plus one space for each one employee, plus extra spaces for dining rooms or meeting rooms as required by subsections 1 and 15 above where the capacity of such areas exceeds the number of beds in the building.
(s) Motor vehicle, boat, camper,	One space for each 200 sq. ft. of

recreational vehicle sales and service establishments	usable floor space of sales room and one space for each one auto service stall in the service room.
(t) Restaurant or establishments for sale and consumption of beverages, food or refreshments on the premises	One space per 2.3 persons maximum occupancy.
(u) Restaurant with drive-through window	One space per 2.3 persons maximum occupancy. In addition, a minimum of eleven stacking spaces are to be provided for the drive-through window, with a minimum of five spaces between ordering and pick-up Each line of stacking space must be at least 9' wide and must be delineated with pavement markings. Such spaces shall be designed so as not to impede pedestrian or vehicular circulation on the site or on any abutting street.
(v) Retail stores except as otherwise specified herein	One space for each 200 sq. ft. of usable floor space

4. <u>Offices</u>

(a) Banks or other financial institutions without drive-through facilities	One space for each 150 sq. ft. of usable floor space.
(b) Banks or other financial institutions with drive-through facilities	One space for each 150 sq. ft. of usable floor space, plus five stacking spaces for each drive-through teller station, including automatic teller machines. Each lane of stacking space must be at least 9' wide and must be delineated with pavement markings. Such spaces shall be designed so as not to impede pedestrian or vehicular circulation on the site or on any abutting street.
(c) Business offices or professional offices except as indicated in the following items (4-6)	One space for each 200 sq. ft. of usable space.

(d) Equipment rental and leasing	One space for each 300 sq. ft. of usable floor area.
(e) Exterminators	One space for each 800 sq. ft. of gross floor area.
(f) Professional offices of doctors, dentists, veterinarians, or similar professions	One space for each 25 sq. ft. of usable floor area in waiting rooms, and one space for each examining room, dental chair, or similar use area.

5. <u>Recreational</u>

(a) Boat dock, harbor, marinas	0.7 spaces for every berth or mooring two spaces for every three employees on the largest work shift, plus one space for every vehicle customarily used in operation of the use or stored on the premises.
(b) Bowling alleys	Four spaces for each one bowling lane plus one space per employee, in addition to requirements for a place serving food or beverages on the site.
(c) Dance school, gymnastics & fitness complex, community center	One space for each 300 sq. ft. of usable floor space.
(d) Golf Course	Six spaces for each golf hole and one space for each employee on the largest work shift.
(e) Gold driving range	One space per tee, plus one space per employee on the largest work shift.
(f) Miniature or “Par-3” golf courses	Three spaces for each one hole plus one space for each one employee.
(g) Private golf clubs, swimming pool clubs, tennis clubs, or other similar uses	One space for each two member families or individuals, plus spaces required for each accessory area such as a restaurant, bar, pro shop, or equipment sales.
(h) Public swimming pool	Two spaces for every 100 sq. ft. of water area, plus one space for each employee on the largest work shift.
(i) Stadium, sports area, or similar place of assembly	One space for each three seats or 6’ of benches, and one space for each one employee.

6. <u>Industrial</u>

(a) Manufacturing, fabrication, sheet metal & welding shops, junkyards, salvage yards, meat packing plants, wholesale distribution, warehouses, reclamation plants, mail order sales	One space for every employee on the largest work shift, plus one space for every vehicle customarily used in operation of the use or stored on the premises.

29.604 <u>CBD Off-street parking requirements</u> ---

(1) **Purpose**: It is the purpose and intent of this ordinance to apply flexible off-street parking and loading requirements for the Central Business District (CBD). The goal is to accommodate the special needs of the area, encourage and promote redevelopment, optimize existing parking facilities, promote shared parking and public transportation, and prevent existing historic structures from being demolished for new parking areas. The parking regulations are reduced in the CBD to aid in the renewal and rebuilding of the downtown.

(2) **General provisions**:

(a) For purposes of this Section, the Central Business District (CBD) shall be defined as areas with Downtown District Zoning (D1, D2, D3, D4, D5).

(b) No off-street parking spaces shall be permitted in front of a structure.

(c) In all D (Downtown) zoning district, the off-street parking requirements may be reduced to 50% of the parking spaces otherwise required; provided the subject property or lot is located within 600' of a municipal parking lot which is primarily available for public parking (as distinguished from a municipal parking lot reserved for employee or other reserved parking).

(d) The reciprocal (shared) use of parking facilities provided to serve any property or use is encouraged in the Downtown Districts. The applicant shall show that there is no substantial conflict in the principal operating hours of the buildings or uses for which the reciprocal use of parking is proposed. A reciprocal parking agreement shall be approved by the Department of Planning and Development and recorded with the Adams County Recorder's Office.

(e) All shared parking facilities shall be located within 600' (horizontal distance) of the use served.

(f) Shared parking proposals involving existing municipal parking lots shall be reviewed during the Site Plan Review process.

(g) The street frontage of all parking areas shall be screened from the public right-of-way with adequate landscaping and/or iron, brick or natural stone fencing between 36" and 42" in height as approved by the Department of Planning and Development on the site development plan. New landscaping installations must achieve the screening height within two years. The use of parking lot landscaping at the perimeter, and on landscape islands is strongly encouraged and shall be shown on a landscaping plan to be submitted with the site plan for review by the Department of Planning and Development.

(h) Existing buildings not in compliance with this ordinance (as of the effective date of this ordinance) may be remodeled, repaired, structurally altered and may change use without complying with the minimum parking standards. If a structure is enlarged in any way, parking must be provided for the area of the enlargement in compliance with Article VI of this ordinance.

(i) Parking requirements in all Downtown Districts will not be enforced on new construction provided the new building has the same footprint of the previous structure. To qualify for this exemption, new construction shall be initiated within two years after a building is demolished. This information needs to be shown on the site plan for review by the Department of Planning and Development.

(j)Where parking is provided in a D district adjacent to an R district, all parking spaces, loading spaces and drives shall be setback from the R district 10'. This setback shall provide sight proof landscaping and/or fencing to screen the use from adjacent properties as approved on a site plan per requirements in Article XV.

29.605 <u>Exclusions, reductions and exceptions from the parking requirements</u> ---

(1) Off-street parking and loading regulations shall not apply to uses approved or existing prior to the enactment of this ordinance. All off-street parking regulations apply to the Central Business District (i.e. Downtown Districts) unless otherwise stated in Section 29.604.

(2) The Director of Planning & Development or his/her authorized designee may grant a parking reduction for commercial developments, industrial developments and mixed-use developments not to exceed 20% of the required parking. For parking reductions greater than 20% of the required parking, the applicant must petition the Zoning Board of Appeals. To qualify, the applicant must submit documentation which meets the following criteria, as applicable, during the site plan review process:

(a) The parking needs will be adequately served.

(b) A mix of residential uses with either office or retail uses is proposed, and the parking needs of all uses will be accommodated through shared parking.

(c) If shared use of common parking is proposed, varying time periods of use will accommodate proposed parking needs. The applicant shall show there is no substantial conflict in the principal operating hours of the buildings or uses (activities) for which the shared use of parking is proposed.

(d) The applicant provides an acceptable proposal for an alternate mode of transportation program, including a description of existing and proposed facilities and assurances that the use of alternate modes of transportation will continue to reduce the need for on-site parking on an ongoing basis.

(e) The joint use of abutting traversable driveways on adjoining properties may be permitted to satisfy the driveway requirements of this ordinance subject to the following conditions:

1.) A recordable instrument conveying the right of shared use, duly executed by the effected property owners, is furnished to Corporate Counsel and recorded by the Adams County Recorder of Deeds.

2.) Said instrument is approved by the Corporate Counsel; and

3.) Said instrument shall clearly state that it is terminable only with the consent of the City of Quincy.

(3) If any reduction sought under this Section is directly related to the nature of the use and occupancy of the property, any material change in such use of occupancy shall nullify such reduction.

29.606 <u>Site development and construction requirements</u> ---

(1) Off-street parking and loading for all uses except single family dwelling units shall be paved and shall be provided with adequate drainage age to dispose of all surface water.

(2) Where any parking area adjoins an existing or proposed sidewalk, the owner shall erect safety curbs on the private property to prevent vehicles from crossing the sidewalk, excepting in the case of a single family lot.

(3) **Pavement surface**: Loading areas, parking lots, driveways, accessways and any other areas on which motor vehicles are parked or stored, or which are used for motor vehicle circulation, shall be constructed with a dust free surface. Acceptable pavement surfaces include concrete, asphalt, or oil and chip. Concrete wheel stops shall be used on oil and ship surfaces to designate the parking stalls in lieu of painted striping. Property owners are allowed to have a temporary gravel surface for a maximum period of one year. This stipulation is intended to allow time for settlement, compaction or allow for off-season construction.

(4) **Curbs and gutters**: Combination concrete curbs and gutters or concrete barrier curbs are required around al landscape islands. The materials and design shall conform to the specifications contained in the most recent edition of the Standard specifications for Road and Bridge Construction, adopted by the Illinois Department of Transportation.

(5) **Striping**: Single striping shall be provided for all parking stalls as a minimum. Each stripe shall be a minimum of 4" in width and 18' in length for each parking space. Striping of each parking space shall be painted in yellow or white. Thermoplastic pavement markings are an acceptable alternative. All areas designated as fire lanes shall be marked by posting of signs and/or yellow markings, provided that signs shall be used wherever feasible.

(6) **Re-striping**: Parking lots existing prior to the date of this ordinance may be re-striped in the course of normal maintenance in accordance with their original plans and requirements.

(7) **Parking lot design**: the following are requirements for parking lot design:

(a) Circulation aisles shall align with one another.

(b) Smooth and efficient on-site circulation must be provided.

(c) All parking rows shall be bound by landscaped islands as described in Section 29.609.

(d) Shared interconnects and shared driveways with adjoining properties shall be provided wherever feasible as determined by the Director of Planning and Development or his/her authorized designee.

(e) All parking stalls shall have a minimum dimension of 9' wide by 18' long. This rectangular area must be included in all shapes of parking stalls for any angle of parking. An automobile overhang may be included in stall depth calculations where such overhang does not extend beyond a required parking setback line or encroach upon a sidewalk. When an automobile overhang beyond an installed curb is included in the stall depth calculation, such overhang shall be considered as part of the parking stall for landscaping or setback purposes.

(8) **Access**: Except on lots accommodating single-family dwellings, each off-street parking space shall open directly upon an aisle or driveway at least 12' wide for one way travel or 24' wide for two way travel. However, a 10' wide aisle for one way travel is permitted provided that there are no points of vehicular or pedestrian access to any building from the driving aisle. The minimum width of an access drive intersecting a street or alley is 24' for two way travel or 12' for one way travel. The minimum return radius from an access drive to a street or alley shall be 20' as measured from the back of the curb wherever possible.

(9) **Maintenance**: Upon completion, all parking areas shall be properly maintained at all times, without pot holes, broken curbing, or other irregularities.

29.607 <u>Off-street parking provisions for the physically handicapped</u> ---

(1) **Required number of spaces**: If any parking is provided for employees, visitors, or both, the minimum number of accessible parking spaces to be provided for handicapped persons shall be according to the current edition of the Illinois Accessibility Code. Accessible parking spaces to be provided for handicapped persons are as follows:

Total Off-Street Parking Spaces Provided	**Space Requirements** Number of Accessible Parking Spaces Required
1 to 25	1
26 to 50	2
51 to 75	3
76 to 100	4
101 to 150	5
151 to 200	6
201 to 300	7
301 to 400	8
401 to 500	9
501 to 1000	2% of total number
over 1000	20 plus 1 for each 100 over 1000
Medical facilities specializing in treatment of persons with mobility impairments	20% of total number
Outpatient medical facilities	10% of total number

(2) **Location**: Accessible parking spaces shall be placed on the shortest accessible route to an accessible entrance of the building. The accessible parking space shall be placed nearest an existing ramp, ever if it means placing the space further from the accessible door. The ramp, however, must not be placed in an access aisle. If a curb ramp is new, both the curb ramp and the accessible parking space must be closest to the accessible entrance.

(3) **Size**: Each handicapped parking space, except on street spaces, shall be at least 16’ in width by 18’ in length for 90 degree parking and shall be proportionately larger at other angles. The 16’ width shall be designed so as to include an 8’ wide access aisle. Adjacent spaces shall not share a common access aisle. All access aisles must blend to a common level with an accessible route and bear diagonal painted stripes. (see figure 1)

(4) **Signage**: Each handicapped parking space shall have a painted international symbol of accessibility on the pavement. In addition, all facilities shall mount on a permanent post, or wall, in the center of accessible parking spaces the following signs: a U.S. Department of Transportation R7-8 (Reserved Parking) sign and R7-I101 ($100 Fine) sign. These signs shall be posted no lower than 4’ above ground and no more than 5’ from the front of the space.

29.608 <u>Lighting</u> ---

(1) Parking lots shall have lighting capable of providing adequate illumination for security and safety.

(2) The minimum requirement is one foot-candle maintained uniformly across the surface of the parking lot.

(3) Lighting standards, whether attached to buildings or mounted on poles, shall be in scale with the height and use of the structure but shall not exceed 30' in height.

(4) All light sources shall be indirect, diffused, or shielded type fixtures, installed to reduce glare and the consequent interference with boundary streets and adjacent property.

29.609 <u>Landscaping</u> ---

(1) **Purpose**: It is the purpose and intent of these regulations to provide adequate protection for contiguous property against undesirable effects caused by the creation and operation of parking and loading areas, and to protect and preserve the appearance and character of the surrounding neighborhoods through the screening effects and aesthetic qualities of landscaping. All parking and loading areas constructed after the date of this ordinance shall be properly screened and landscaped as hereinafter described.

(2) **Definitions**: For purposes of this ordinance, landscaping shall mean living green plants in combination of trees and either shrubs or ground cover, all of which are defined as follows:

(a) Deciduous trees having, at the time of planting, not less than a 2-1/2" caliper measured on the trunk 6" above the ground.

(b) Ornamental trees having, at the time of planting, not less than 1-1/2" caliper measured on the trunk 6" above the ground.

(c) Evergreen trees having, at the time of planting, a height of not less than 4'.

(d) Shrubs having, at the time of planting, a height of not less that 2'.

(e) Ground cover which includes grass, ivy, juniper, wood mulch, decorative or aggregate rock, or other approved pervious surfaces.

(3) **Quality**: Plant material and grasses shall be of generally acceptable varieties and species, free of insects and diseases, and hardy to the Quincy area as listed in the Arboricultural Specifications Manual for the City of Quincy.

(4) **Landscaping Plan**: An applicant for development approval who is required to install landscaping shall submit a landscaping plan along with the application for development approval to the Department of Planning and Development. The landscaping plan shall be prepared by a landscape architect or designer. The required landscaping information can also be included on the site plan. The landscaping plan shall include all of the following:

(a) Landscaper's name, address and telephone number; name of development;

(b) Location, quantity, size and type of existing on-site natural vegetation to be utilized, if any;

(c) Location, quantity, size and type of proposed landscaping on a site plan, showing its relation to other site features such as utilities and easements;

(d) Elevation and drawings of any solid screen proposed;

(e) Planting time schedule;

(f) Trees, bushes, and other significant vegetation proposed for removal;

(g) All proposed building footprints;

(h) Parking areas and driveways;

(i) Sidewalks and pedestrian ways;

(j) Scale and North arrow; and

(k) Any other information that may be needed to show compliance with this Section.

(5) **Landscaping requirements adjacent to streets**: Where a parking lot lies adjacent to or is visible from any public or private street, the entire frontage along said parking area, excluding curb cuts or other accessways, shall be landscaped and screened as follows (see figure no. 5).

(a) One tree and four shrubs shall be planted for every 30' of frontage to be located within a strip of land paralleling the adjacent street and having a width of not less than 5'. Trees do not have to be placed 30' on-center. Strategic grouping of shrubs is encouraged.

(b) The landscaping strip of land paralleling the adjacent street shall be located on private property. This strip shall not contain any impervious surface and shall be planted in 80% grass (seeded or sodded) in addition to the required landscaping.

(c) A maximum of 50% of the required number of trees may consist of a mix of ornamental and evergreen trees.

(d) The required number of trees and shrubs may be reduced by up to 50% if earth sculpting, berms, or decorative screening fences or walls are installed on private property along the frontage of the adjacent street to a height of not less than 3' above the grade of the parking area and, in the opinion of the Director of Planning and Development, are designed to effectively screen the parking area yet avoid erosion, drainage or maintenance problems

(e) No landscaping, hedge, wall, fence or berm that exceeds 24" in height shall be located within 10' of any driveway opening nor otherwise located so as to interfere with the visibility of vehicles or pedestrians.

(6) **Landscaping requirements for interior areas**: Where a parking lot having 50 or more parking spaces is wholly or partially visible from an adjacent public or private street, it shall be further landscaped as follows (any fractional result shall be increased to the next whole number).

(a) Quantities:

Canopy Trees - 1 per 15 spaces; and

Understory Trees - 1 per 10 spaces; and

Shrubs - 1 per 4 spaces.

(b) Distribution: The required landscaping shall be generally distributed throughout the parking area provided that a minimum of 25% of the required total for each plant category (large canopy trees, understory trees and shrubs) shall be planted on interior features such as islands, peninsulas or medians. Each parking space shall be located within 100' of a canopy tree or understory tree located anywhere on the subject property. For the purpose of this Section only, this may include either an existing tree, a tree required by this Section, a tree installed as buffer tree, or a tree installed as a street tree. The remaining 75% of the required total plantings may be distributed between interior features; areas within 30' of the outside boundary of the parking and/or driveway surface; areas between a parking surface and any principal building on the site; or in planters on any ground generally enclosed by a combination of building area, pedestrian facilities and/or parking surface.

(c) Interior landscaped areas shall follow the minimum dimension requirements illustrated in figure nos. 2 - 4.

(d) A maximum of 50% of the required number of trees may consist of a mix of ornamental and evergreen trees.

(e) Such landscaping shall be in addition to any planting or landscaping within 6' of a building or other screening requirements.

(7) **Existing trees**: Existing canopy and/or understory trees located within 30' of the parking or driveway surface may be counted toward the requirements of this Section provided that they are located on the subject property. Existing trees located in the public right-of-way do not qualify. All distances are to be measured from the nearest face of the tree trunk. Existing canopy trees with a caliper of at least 10", measured at 12" above the root crown may count as two trees. The use of existing trees shall be noted on the landscape plan.

(8) **Maintenance of landscaping and screening**: All landscaping and screenings shall be installed and permanently maintained as follows:

(a) All new landscaped areas shall be installed within 6 months after the occupancy or use of the building or premises. Dead plant materials shall be replaced within 12 months with living plant material, taking into consideration the season of the year, and shall have at least the same quantity and quality of landscaping as initially approved. This includes, but is not limited to, the replacement of plants damaged by insects, diseases, vehicular traffic, acts of God, and vandalism.

(b) All landscaping and screening shall be maintained in a healthy, neat, trimmed, clean and weed-free condition. Landscaped areas shall be covered with either grass and/or other types of pervious ground cover located beneath and surrounding the trees and shrubs.

(c) Landscaped areas within and immediately adjacent to an off-street parking or loading area shall be protected from the encroachment of motor vehicles by placing, along the entire perimeter of the landscaped area, a 6" concrete curb or other curbing material per the requirements in Section 1605.

(9) **Outdoor refuse collection**: Refuse areas shall not be located within front yards or within required parking setbacks. Outdoor refuse collection containers and similar facilities shall be screened from public view on all four sides. The area shall be visually screened with an opaque material, which may include shrubs, walls, fences or berms that are a minimum of 6' in height. Single family homes shall be exempt from this provision.

29.610 <u>Off-street loading/unloading area requirements</u> ---

(1) **Purpose**: The following regulations, applicable to new construction in all zoning districts except for single family lots, are established to increase safety and decrease congestion in the public streets, to set standards for the requirement of off-street loading facilities in proportion to the amount of traffic generated by each use, and to eliminate the on-street parking of vehicles along major traffic routes.

(2) **Location**: All required loading berths shall be located on the same zoning lot as the use served. No loading berth for vehicles over two tons shall be closer than 50' to any property in a residential district. No permitted or required loading berth shall be located within 25' of the nearest point of intersection of any two streets. No loading berths shall be located in required side yards.

(3) **Design and maintenance**:

(a) **Size**: The number and size of loading spaces must be equal to the maximum number and size of vehicles which would be simultaneously loaded or unloaded in connection with the business conducted on the property. Each required loading berth shall have a minimum

width of 12’ and a minimum vertical clearance of 14’ above finished grade of the space. The length shall be a minimum of 30’ for local delivery and 60’ for semi-trailers.

(b) **Access**: Each required off-street loading berth shall be designed with appropriate means of vehicular access to a street or alley in a manner which will least interfere with traffic movements.

(c) **Projection**: No portion of a vehicle shall project into a street, drive, alley, or other public right-of-way while being loaded or unloaded.

(d) **Exclusive use**: Spaces allocated to any off-street loading shall not, while so allocated, be used to satisfy the space requirements for any off-street parking facilities or portions thereof.

(e) **Surfacing**: All open off-street loading finish surfaces shall comply with the provisions of Section 29.606.

(f) **Repair and service**: No motor vehicle repair work or service of any kind shall be permitted in conjunction with loading facilities provided in any residence or business district.

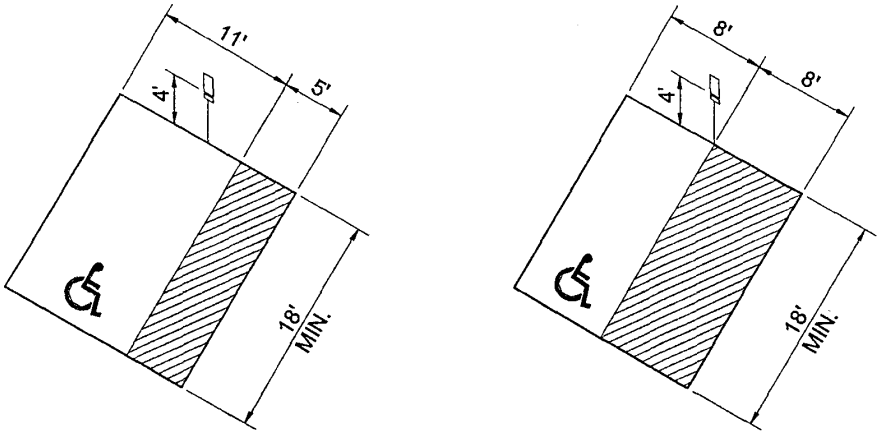

FIGURE 1
HANDICAPPED PARKING SPACES

IT IS NECESSARY TO ACCOMMODATE THE VEHICLE OVERHANG WHEN DESIGNING LANDSCAPED AREAS IN PARKING LOTS. PLANTS ARE OFTEN DAMAGED IF A LANDSCAPE STRIP IS NOT WIDE ENOUGH TO PROVIDE FOR BOTH THE PLANTS AND THE VEHICLE OVERHANG.

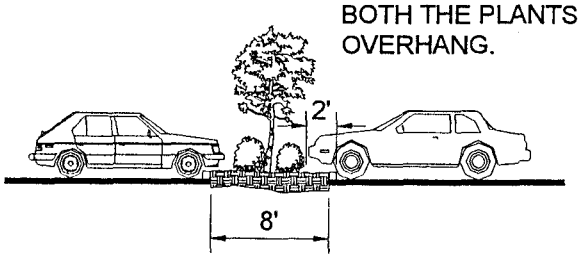

FIGURE 2
CENTER PARKING LOT ISLAND DESIGN

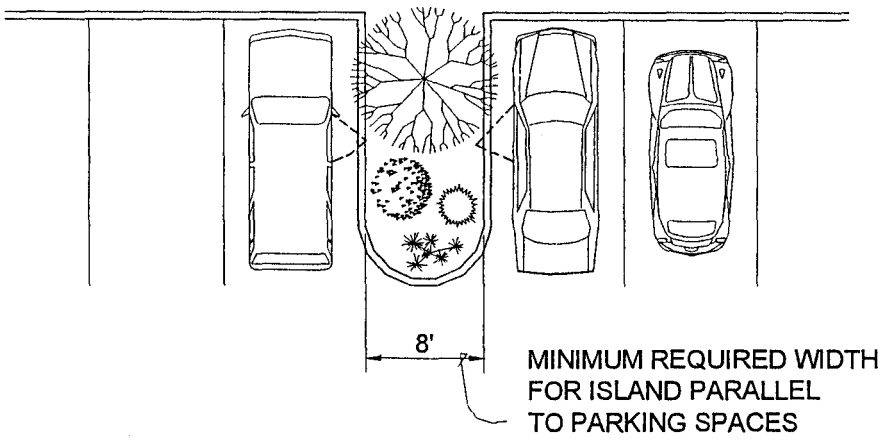

FIGURE 3
PLANTING ISLAND PARALLEL TO PARKING SPACES

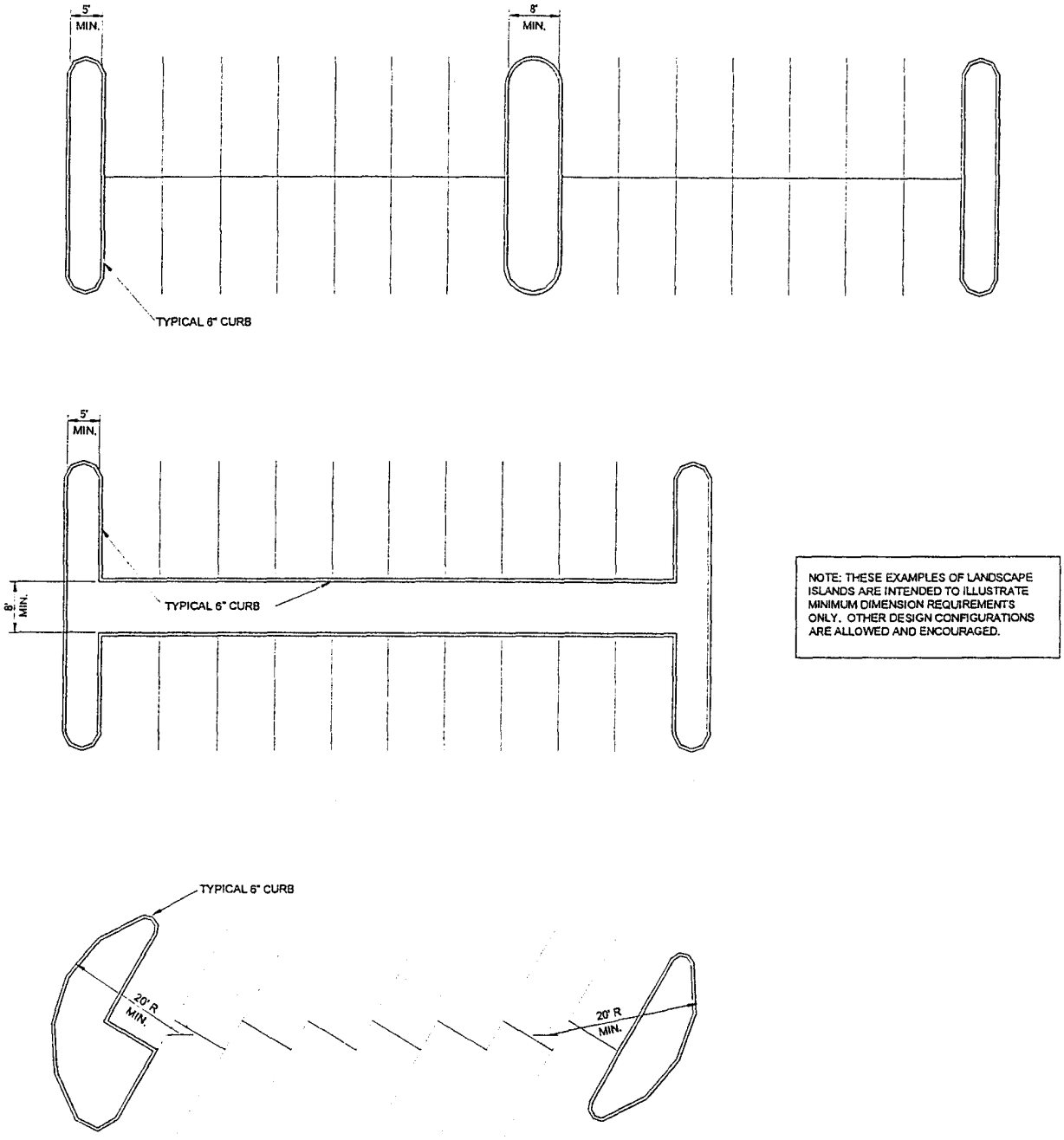

FIGURE 4
MINIMUM LANDSCAPE ISLAND DIMENSIONS

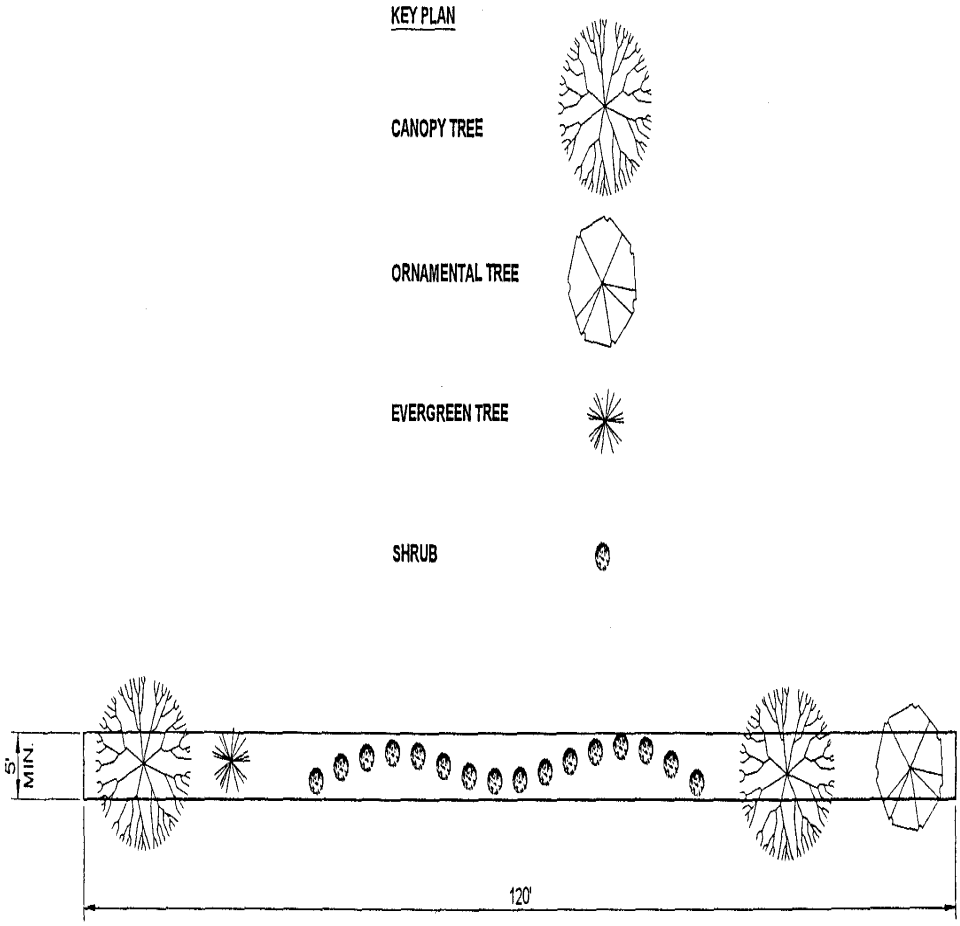

LANDSCAPING REQUIREMENTS	TOTAL
ONE TREE AND FOUR SHRUBS SHALL BE PLANTED FOR EVERY THIRTY FEET OF FRONTAGE	4 TREES 16 SHRUBS
A MAXIMUM OF 50% OF THE REQUIRED NUMBER OF TREES MAY CONSIST OF A MIX OF ORNAMENTAL & EVERGREEN TREES	2 ORNAMENTAL TREES OR 2 EVERGREEN TREES

FIGURE 5

LANDSCAPING REQUIREMENTS ADJACENT TO STREETS

ARTICLE VII ACCESSORY USES & BUILDINGS ARE REGULATED

Section 29.701 <u>Terms relating to accessory buildings and uses are defined</u> ---

(1) Accessory use means a use subordinate to and incidental to the primary use of the main building or to the primary use of the premises.

(2) Accessory building is a part of the main building, or a separate building devoted to an accessory use.

(3) A private garage is an accessory building housing not more than four (4) vehicles owned and used by occupants of the main building. Where more than four (4) vehicles are housed or where the vehicles are used by persons other than occupants, the building is a storage garage requiring at least M1 zoning. A storage garage is not an accessory building.

(4) **Home occupation regulations**: A home occupation is an occupation or profession carried on by a member of the immediate family residing on the premises, which is clearly incidental and secondary to the use of the dwelling unit for residential purposes, and which conforms to the standards and provisions provided herein.

(a) Standards for the operation of a home occupation.

1.) Only one occupation or profession shall be permitted.

2.) The occupational use shall occupy no more than 25% of the ground floor area of the structure including an attached garage.

3.) Only items produced on the site shall be sold upon the premises. No retail sales, warehousing or wholesaling shall be permitted on the premises.

4.) The goods and services shall be provided principally on a custom, individual appointment or to-order basis, rather than a continuing and regular business enterprise.

5.) One sign shall be permitted indicating only the name of the person and their occupation. The sign shall not exceed 2 sq. ft. in size and shall not be illuminated. The sign shall be attached to the house, mailbox or light post. No free standing sign is allowed.

6.) No display or products shall be visible from the street.

7.) No person other than a member of the immediate family residing on the premises may be employed.

8.) No offensive noise, vibration, smoke, dust, odors, heat, or glare shall be produced.

9.) Only normal domestic or household equipment shall be used to accommodate the home occupation. This prohibits the use of gases, chemicals, commercial or industrial mechanical and electrical equipment.

10.) All activities shall be carried on indoors, only in the principal building. No outdoor activities, display or storage shall be permitted.

11.) No additional or separate exterior entrance from outside the principle building to the home occupation except that which serves the residential portion of the home.

12.) No structural additions, enlargements or exterior alterations are permitted that would change the residential character of the dwelling.

(b) Specific examples of home occupations permitted. Permitted home occupations may include, but are not limited to, the following list:

1.) A professional such as an engineer, planner, architect, doctor, dentist, or attorney.

2.) Dressmakers, seamstresses or tailors.

3.) Music, dancing and other teachers or tutors, provided the instruction is limited to one pupil at a time.

4.) Beauty, barber, masseuse or manicure services having not more than one operator.

5.) Real estate or insurance services.

6.) Photography studio devoted to the photography of individuals or small groups.

7.) Artists, composers, and authors.

(c) Specific examples of home occupations prohibited. Home occupations shall not in any event be deemed to include:

1.) Automobile, truck, or vehicle repair.

2.) Rental business.

3.) Stables, kennels or dog grooming.

4.) Eating or drinking establishments.

5.) Tourist homes.

6.) Veterinarian services and animal hospitals.

7.) Mortuaries and embalming establishments.

8.) Private clubs, including fraternity and sorority houses.

9.) Open storage of construction materials or contractors equipment.

29.702 <u>Following accessory uses are permitted</u> ---

(1) In the RU1, RE1, R1A, R1B, R1C and R2 districts:

Private garages

Home occupations in accordance with the provisions of this Section

Radio or television antennae, satellite discs, dishes and other reception equipment of a type commonly used by individual consumers for household use, provided such equipment is not located in any required front yard or nearer than 5’ of a side or rear property line, such equipment is not of a height, design or location which could fall or collapse within 5’ of the property lines of adjoining zoning lots if it fell or collapsed at its full or extended height, such equipment is securely anchored, and such equipment does not otherwise constitute a hazard.

Vegetable and flower gardens

Outdoor coin telephones

Tennis courts, swimming pools, garden houses, pergolas, ornamental gates, barbecue ovens, fireplaces, and similar uses customarily accessory to residential uses.

(2) In the R3, NR1 and NR2 districts, there may also be storage garages and parking lots for use solely of occupants of the premises.

(3) (a) In the CIA district, there may be only the following accessory uses:

Parking lots

A use not to exceed 15% of the floor area for incidental inside storage; provided that outside or open storage may not be an accessory use.

Private garages for any single-family dwelling or for bona fide occupants of tenants of the premises.

Outdoor coin telephones

(b) In the C1B, C2 and C3 districts there may be any accessory use permitted in a higher district (i.e., C1A and residential districts) and additionally the following:

Parking lots

A use of not to exceed 40% of the floor area for incidental inside storage or light industrial activity; provided that outside or open storage may not be an accessory use.

Outdoor coin telephones

(4) In the M1 district there may be any accessory use.

(5) In the M2 and M3 districts there may be any accessory use including living quarters of watchmen and caretakers employed by an industry occupying the premises.

(6) Temporary buildings, including trailers, for construction purposes are permitted in any district as accessory buildings during the course of actual construction as permitted by the Building Inspector.

(7) Accessory buildings may not be used for dwelling purposes.

29.703 (Reserved)

29.704 <u>Accessory buildings shall be located in accordance with the following rules</u> -

(1) Accessory buildings may be located in a rear yard but may not occupy more than 15% of the lot area in the RE1 to R3, NR1 and NR2 districts. At no time shall an accessory structure exceed an area of 1,200 sq. ft. In the RU1 district accessory buildings shall have a maximum size of 2,500 sq. ft. on properties less than 5 acres in size, 3,600 sq. ft. on properties between 5 acres and 10 acres, and 5,000 sq. ft. in size for properties greater than 10 acres in size.

(2) Any accessory building closer than 10’ to a main building shall be considered as part of the main building and shall be provided with the side and rear yards required for the main building.

(3) If an accessory building is more than 10’ from the main building on a lot, the accessory building may be built in a rear yard, provided such accessory building shall not be located nearer than 2’ to any side or rear lot or nearer than 5’ to any alley or similar right-of-way easement abutting the rear or side of the lot. This shall not be construed as requiring a side yard greater than would otherwise be required. An accessory building located under this provision must be at least 60’ from the actual front street curb line or, if no curb, where the same would be located as determined by the City Engineer.

(4) Where a garage is entered from an alley, it must be kept 10’ from the alley line or 16-1/2’ from the center line of such alley, whichever is more.

(5) On corner lots the minimum buildable width of 28’ (see subsection (2) of Section 29.403) for main building is reduced to 22’ for accessory buildings.

(6) No accessory building shall be constructed upon a lot until the construction of the main building has been actually commenced, and no accessory building shall be used for dwelling purposes; provided, however, that the provisions of this paragraph shall not apply during any period or periods during which the City Council, by resolution, shall declare that a housing emergency exist.

(7) Every part of a required yard shall be open to the sky, unobstructed, except for accessory buildings in a rear yard, and except for the ordinary projections of skylights, sills, belt courses, cornices and ornamental feature projecting not to exceed 12".

(8) An open unenclosed porch or paved terrace may project into a front yard for a distance not exceeding 10'.

(9) Heating and air conditioning units shall not be placed in the required front yard. Heating and air conditioning units may be permitted in side yards, provided:

(a) A 3' clear area is provided between the unit and the property line to permit emergency personnel to pass safely without obstruction.

(b) Where a commercial use abuts a residential use, heating and air conditioning units shall only be permitted in the rear yard or the roof.

(c) Existing heating and air conditioning units which do not conform with the above provisions may continue to operate as nonconforming uses. A nonconforming heating and air conditioning unit may be replaced with a unit equal to or smaller in physical size and quieter.

(d) Variation from the provisions of this subsection may be authorized by application to the inspection office. Upon review of the application by the building official and Fire Chief and determination that an exceptional or unusual physical arrangement of a home on a lot exists which would prevent the location of a heating and air conditioning unit in another yard area and public health and safety will not be compromised by the proposed location, a variation may be granted. A denial by the building official and Fire Chief is subject to appeal to the Zoning Board of Appeals.

The above provisions do not apply to window air conditioning units.

29.705 <u>Fences</u> --- Fences, walls or screens shall be located in accordance with the following rules:

(1) Fences, walls or screens 4' or less may be located on any part of a lot, except that no fence of more than 3' high may be located or maintained within 30' of a street intersection.

(2) Except as otherwise provided for herein, fences, walls and screens 6' high or less may be erected in a side or rear yard as defined in Section 29.401 et seq., of this Code. Whenever a rear yard or side yard abuts or adjoins the front yard of a lot, a fence height of 4' shall be maintained for the adjoining or abutting front yard area.

(3) The rules herein provided shall not apply to fences, walls and screens on any land devoted to farming, as defined in Section 29.101.

(4) The rules herein provided shall not apply to security fences in any industrial (M) district.

(5) Fence height shall be based on the panel height of the fence, excluding post. The average distance between the base of the fence panel and the finished ground elevation shall not exceed 6".

(6) On corner lots, no fence shall exceed a height of 4' on the street side yard or rear yard area as defined in Section 29.401.

(7) Guards required on retaining walls as per the BOCA National Building Code as adopted under this Code, shall not exceed a height of 4'.

ARTICLE VIII NON-CONFORMING USES

Section 29.801 <u>Non-conforming uses, buildings and structures</u> ---

(1) **Purpose**: It is the purpose of this Section to provide for the regulation of non-conforming uses, buildings and structures and to specify those circumstances and conditions under which non-conforming uses, buildings, and structures may be continued. It is, however, the purpose and intent of this Section that all non-conforming uses shall be eventually eliminated. This Section shall be liberally construed to this end.

(2) **Definitions**: For purposes of this Section and the entire zoning article, the following definitions shall apply:

(a) **Non-conforming building or structure**: A "non-conforming building or structure" is any building or structure which:

1.) Does not comply with all of the regulations of this zoning article or of any amendment hereto governing bulk for the zoning district in which such building or structure is located; or

2.) Is designed or intended for a non-conforming use.

(b) **Non-conforming use**: A "non-conforming use" is any use of land, buildings or structures which does not comply with all of the regulations of this zoning article or of any amendment hereto governing use for the zoning district in which such use is located.

(c) **Use**: "Use" for purposes of this Section refers to the specific and particular use involved, not the general category of use involved. For example, a specific and particular use would be the sale of certain specific and particular goods and products at retail rather than the general use of sale of goods and products at retail.

(d) **Enlargement, extension and structural alteration**: A non-conforming use, building or structure will be considered "enlarged, extended or structurally altered" if

1.) There is or will be any material or substantial change in the construction, identity and/or use of the present building or structure, including but not limited to a change in the goods sold or manufactured upon the premises;

2.) There is or will be any change in the supporting members of a building or structure, such as bearing walls or partitions, columns, beams or girders, or any complete rebuilding of the roof or the exterior walls, other than a minor alteration which affects primarily the appearance and not the life of the structure;

3.) There is or will be an addition to the floor area of an existing building, an increase in the size of any other structure, or an increase in that portion of a tract of land occupied by an existing use (including but not limited to an expanded parking area);

4.) There is or will be an increase or amplification in the intensity of a use, building or structure; or,

5.) There is or will be an addition of a different entrance or access to the building, structure or premises.

A non-conforming use, building or structure may be considered "enlarged, extended or structurally altered" for other reasons than those set forth specifically herein consistent with the purpose and intent of this Article and this Chapter.

(3) **Continuation**: Any non-conforming use, building or structure which existed lawfully on the effective date of this amendatory zoning article and which remains non-conforming, and any use, building or structure which shall become non-conforming upon the adoption of this Article or of any subsequent amendments thereto, may be continued subject to the limitations set forth in this Section. This Section shall not be construed as

authorizing the continuation of any use, building or structure which was not so lawfully existing. The provisions hereof shall not only apply to a building or structure which is completely occupied by such non-conforming use, but shall also apply to one in which the non-conforming use occupies only a portion of such building or structure.

(4) **Future extensions of jurisdiction**: If a use, building or structure becomes subject to this Article, whether by the extension of the zoning jurisdiction of the City of Quincy by reason of extension of the corporate of the City of Quincy, or otherwise, and the use, building or land at the time it becomes subject to this Article is lawful but does not conform with the regulations of the district in which the use, building or structure is situated, such use, building or structure may continue as a non-conforming use, building or structure under the provisions hereof.

(5) **Registration of non-conforming uses, buildings and structures**:

(a) **Generally**: To better provide for the enforcement of the provisions of this Article and this Section, all non-conforming uses, buildings and structures shall be registered in accordance herewith, except as otherwise provided herein. In the event the owner or other interested party fails to register a non-conforming use in accordance herewith on or before the 31st day of December, 1980, the use shall not be considered a non-conforming use for purposes hereof. Thereafter, a non-conforming use which has not been registered may not be continued unless a special permit for such non-conforming use is obtained. If not timely registered, there shall be no right to a special permit. A special permit may be issued in the same manner as any other special permit. The non-conforming use, building or structure may not be continued if not so registered or a special permit obtained. The use, building or structure shall thereafter conform with the provisions of this Article applicable to the district involved. Notwithstanding anything herein to the contrary, the owner or other interested party need not register any non-conformity resulting from bulk requirements, or on account of off-street parking requirements. It is the intent of this Section that only non-conformity because of use need be registered.

(b) **Future extensions of jurisdiction and non-conformity**: Where a non-conforming use, building or structure exists by reason of the extension of the zoning jurisdiction of the City of Quincy or by virtue of changes in the zoning regulations occurring before January 1, 1997, such non-conforming use, building or structure must be registered in accordance with this Section before April 1, 1997. Thereafter, such non-conforming uses which have not been registered may not be continued unless a special permit for such non-conforming use is obtained. Where a non-conforming use, building or structure exists by reason of the extension of the zoning jurisdiction of the City of Quincy or by virtue of changes in the zoning regulations occurring after January 1, 1997, such non-conforming use, building or structure must be registered in accordance with this Section within 90 days following written notice to the owner of such use, building or structure by the Department of Planning and Development that such use, building or structure is non-conforming.

(c) **Registration procedures**:

1.) **Statement of non-conformity**: To register a non-conforming use in accordance herewith, the owner or other interested party shall file a statement of non-conformity with the Building Inspector setting forth the name or names of all owners of the property involved; the common or street address of the property; the legal description of such property; the real estate tax number of such property; the zoning district in which such property is located; the zoning district in which the non-conforming use, building or

structure would have to be located in order to be conforming; the specific nature, character and extent of such non-conforming use as it exists on the date of such statement; the date on which such non-conforming use or prior non-conforming uses commenced; the period or periods during which such non-conforming use was discontinued or such building or structure was vacant and unoccupied; and such additional information as the Building Inspector may require.

2.) **Certificate of non-conformance**: Within 60 days after receipt of a statement of non-conformity, the Building Inspector shall issue a certificate of non-conformity relative to such use, building or structure if it reasonably appears from the statement of non-conformity and any independent investigation the Building Inspector may conduct that the use, building or structure is a lawful non-conforming use. Such certificate of non-conformance is issued, in effect, to the property. A future certificate shall not be required even if there is a change of ownership. A non-conforming use shall not be considered registered until a certificate of non-conformance is issued, provided that once issued it will be considered as having been issued on the date the statement of non-conformity was filed with the Building Inspector. If a certificate of non-conformance is not issued within 60 days, the Building Inspector shall be considered to have refused to issue the same. In the event that the Building Inspector refuses to issue a certificate of non-conformance or fails to issue such certificate of non-conformance within 60 days after receipt of a statement of non-conformity as aforesaid, such decision may be appealed to the Zoning Board of Appeals as any other decision of the Building Inspector.

3.) **Obligation of owner**: The obligation for obtaining a certificate of non-conformance rests solely with the owner or other interested party.

4.) **Effect of certificate and revocation**: Absent material inaccuracies or misstatements contained in the statement of non-conformity filed with the Building Inspector, once a certificate of non-conformance is issued, the non-conforming use shall be presumed to exist as described in such statement of non-conformance. A certificate may be revoked by the Building Inspector if any material inaccuracies of misstatements are discovered. Further, such a certificate may be revoked by the Building Inspector if the provisions of these regulations governing non-conformity are violated by failing to obtain a necessary special permit or otherwise.

5.) **Fees**: The Building Inspector shall not charge a fee for the issuance of a certificate of non-conformance prior to January 1, 1980. Thereafter, a fee of $10.00 will be charged upon the filing of the application. If desired by the owner or other interested party, the Building Inspector for a fee of $5.00 shall provide a certified copy of the certificates of non-conformance suitable for placing of record.

6.) **Special use**: This Section does not limit or negate the option of applying for a special permit use relative to a non-conforming use.

(6) **Change of non-conforming use**: A non-conforming use may not be changed to another non-conforming use of the same or of a higher classification except by a special permit issued pursuant to Section 29.803. Once a special permit is granted allowing for a change to another non-conforming use, such use may not again be changed to another non-conforming use, even to the use previously existing, without again obtaining a special permit as aforesaid. A non-conforming use may not be changed to a use in a lower classification. For the purposes hereof, the terms "higher classification" and "lower classification" mean uses higher or lower (above and below) on the list of districts in subparagraph (2) of Section 29.102 than the district in which the subject use would be

classified if a conforming use. The RU1 district thus being the higher classification and the M3 district thus being the lowest classification. In the event a change is made to another use which itself requires a special permit, a special permit must be obtained not only for the change of the non-conforming use, but for the other use itself. The requirements of all applicable special permits must be complied with. Once the right to continue the non-conforming use terminates, however, the special permit shall automatically terminate irrespective of any provisions of this Chapter to the contrary.

(7) **Enlargement, extension and structural alteration**: A non-conforming use, building or structure may not be enlarged, extended or structurally altered in any manner unless such non-conforming use, building or structure after so enlarged, extended or altered is made to conform to all the regulations of the district in which it is located or unless a special permit is issued therefore pursuant to Section 29.203. Whether a chance to a non-conforming use, building or structure is to be considered an enlargement, extension or structural alteration, of a non-conforming use is to be liberally construed in favor of a conclusion that such change is an enlargement, extension or structural alteration, it being the purpose and intent hereof that all non-conforming uses shall be eventually eliminated or strictly regulated. Notwithstanding anything herein to the contrary, normal maintenance of a building or structure containing a non-conforming use or being non-conforming is permitted provided there are not enlargements, extensions or structural alterations.

(8) **Discontinuance of use**: If a non-conforming use is discontinued, or a non-conforming building or structure is vacant, and remains unoccupied for a continuous period of 6 months or a total of 6 months within any 12 month period, such non-conforming use, building or structure shall not thereafter be occupied or used except in conformity with the regulations of the district in which such use, building or structure is located.

(9) **Damage or destruction**: If a building or structure containing a non-conforming use, or a building or structure otherwise non-conforming, is by any means or cause damaged or destroyed to the extent of 50% or more of its fair market value immediately before such damage or destruction, such building, structure or reconstruction thereof shall thereafter be occupied and used only for a conforming use or otherwise in conformity with the regulations applicable to the district in which the same is located. In the event that such damage or destruction is less than 50%, no repairs or reconstruction shall be made unless such reconstruction is started within one (1) year from the date of the partial destruction and is diligently prosecuted to completion. A building or structure shall be considered damaged or destroyed to the extent of 50% or more of its fair market value immediately before such damage or destruction if the costs of such reconstruction is 50% or more of such fair market value, basing such fair market value solely on the real property tax assessment of such building or structure for the assessment period most recently available.

(10) **Non-conforming uses of land**: The lawful use of land for storage purposes (where such use is not an adjunct of any structure) located in any R district shall be discontinued and the stored materials removed within 2 years after the effective date of the amendatory zoning ordinance, that is, November 25, 1973. All junk yards shall conform with the requirements of subparagraph (10) of Section 29.202 within 2 years after the effective date of this amendatory zoning ordinance, that is, November 25, 1973. All advertising signs and billboards shall comply with all provisions of this amendatory zoning ordinance with 5 years after the effective date of this amendatory zoning ordinance, that is, November 25, 1976.

(11) **Illegal uses**: The adoption of this amendatory zoning ordinance, or any amendment hereto, shall in no way legalize any illegal uses existing at the time of adoption.

(12) **Change to conforming use**: Whenever building or structure occupied by a non-conforming use is changed to or replaced by a use conforming to the provisions of this zoning article, such premises shall not thereafter be used or occupied by non-conforming use.

ARTICLE IX PLANNED DEVELOPMENTS

Section 29.901 <u>Purpose</u> --- The purpose of the planned development regulations set forth in this Article is to encourage and allow more flexible, creative and imaginative use and design of land and property developments than is otherwise possible under district zoning regulations. Planned developments are intended to provide for the efficient and economical use and development of land and property in a manner which is compatible with surrounding existing uses or prospective uses. This purpose is deemed by the City of Quincy to be especially important due to the size, growth patterns and existing uses of land and property in the City of Quincy and its environs. Uses and developments of land and properties may be compatible and appropriate although not otherwise consistent with district zoning regulations. Such uses and developments found compatible may be allowed, irrespective of any other regulations of this Chapter, or other applicable ordinances of the City of Quincy as provided in this Article as planned developments.

29.902 <u>Specific objectives</u> --- Without in any way limiting the scope of this Article, this Article is designed to accomplish the following specific objectives:

(1) To permit a maximum choice in the types of environment available to the public by allowing a development that would not be possible under the strict application of the other Sections of this Chapter or other applicable ordinances of the City Quincy.

(2) To promote a creative approach to the use of land and related physical facilities that results in better design and development, with the inclusion of aesthetic amenities.

(3) To combine and coordinate architectural styles, building forms, and building relationships with a possible mixing of different urban uses in an innovative design.

(4) To encourage a pattern of development to preserve natural vegetation, topographic and geological features, and environmentally appropriate features.

(5) To provide for the prevention and/or control of soil erosion, surface flooding and the preservation of sub-surface water,

(6) To create a method for the permanent preservation of common open space for the continued use and enjoyment of the residents of the development.

(7) To promote the more efficient use of the land resulting in more economic networks of utilities, streets and other facilities.

(8) To encourage a land use which promotes the public health, safety, comfort, morals and welfare.

(9) To create a method for the permanent preservation or architectural and/or historic landmarks.

(10) To provide a means for the development of existing properties which cannot otherwise be economically or reasonably developed based on district zoning regulations.

(11) To assure that the development of land and properties are consistent with adjoining uses and developments, whether existing or prospective.

(12) To provide a means by which the City of Quincy can allow the use and development of land and property which is consistent with the comprehensive planning of the City of Quincy and surrounding uses and developments without modifying the district zoning scheme established by this Chapter.

29.903 <u>Planned development</u> ---

(1) **Definition**: A planned development is any tract of land regardless of size approved as a planned development pursuant to the provision of this Article.

(2) **Development**: A planned development is intended to provide for projects incorporating either a single type use or a variety of related uses planned and developed as a unit. Such development may consist of conventionally subdivided lots to be sold, unsubdivided single ownership, separate condominium ownership of structures, or other ownership methods, and shall provide for development by means of a planned development plat which establishes the location and extent of any special features of the planned development in keeping with the purpose of the plan. A planned development may be located as a special use in any zoning district. Any use may be located as a planned development.

29.904 <u>General procedures</u> ---

(1) **Special use**: A planned development shall be granted as a special use in accord with the procedures and standards of this Article and may depart from the normal procedures, standards and other requirements of the other sections of this Chapter or this Code to the extent inconsistent with this Article.

(2) **Application**: Applications shall be on forms prescribed by the secretary of the Plan Commission and shall be accompanied by such plats, plans or documents as may be prescribed by this Article or by the secretary of the Plan Commission. Unless otherwise prescribed by the secretary of the Plan Commission, 10 copies of any supporting plats or related documents shall be submitted. On review of any application as provided in this Article, the Plan Commission, the City Council or other reviewing authority may require that the application and supporting documents be supplemented as deemed appropriate.

29.905 <u>Conceptual plan</u> ---

(1) **Purpose**: The purpose of a conceptual plan submission is to obtain the general approval of the city for the development of land or property in accord with the plans, programs and schedule submitted as a part of the planned development application. It is intended that the proposal submitted will be in preliminary conceptual form and that, following the anticipated approval, the developer will proceed with preparing detailed plans for all or a portion of the site for submission as a preliminary plat. This procedure allows for approval of an overall concept without the necessity of prejudging long-range markets and preparing precise plans for unknown quantities and allows the developer to complete long-range commitments knowing the developer has a viable and acceptable project. The conceptual plan procedure is not mandatory and the developer may select to proceed directly to the preliminary plat and final plat procedure.

(2) **Procedure**: A request for the approval of a conceptual plan shall be submitted to the secretary of the Plan Commission. The plan shall be presented to the Plan Commission for review and comment. The Plan Commission shall provide its comments and suggestions as appropriate. The Plan Commission may approve or disapprove the general concept of the plan. Approval or disapproval shall not necessarily require subsequent approval or disapproval. However, if requested by the applicant, a public hearing shall be scheduled as provided below in this Article. After such hearing, the Plan Commission shall make its formal recommendation to the City Council relative to the conceptual plan. If approved by the City Council, such approval shall constitute a zoning

acceptance of the specific content of the conceptual plan and shall indicate the general acceptance of the City Council and commitment to approve a plat that carries out, refines and implements the concepts expressed in the conceptual plan. The preliminary plat and final plat shall be submitted for approval in accordance with this Article within a period not to exceed one (1) year from the date of approval of the conceptual plan. If not so submitted, the approval shall be automatically deemed withdrawn. The preliminary plat, if submitted after a hearing, shall be approved as a planned development plat if it conforms substantially with the principles and concepts presented in the conceptual plan. No building permit shall be issued for any structure until the final plat has been filed, approved and recorded.

29.906 <u>Preliminary plat procedure</u> ---

(1) **Purpose**: The purpose of the preliminary plat submission is to obtain the approval and/or commitments from the city that the plans, design and program that the developer intends to build and follow are acceptable, and that the developer can reasonably proceed into final detailed architecture, engineering, surveying and landscape architecture in anticipation of final plat approval and subsequent construction. This is a relatively detailed submission that assures the developer that the developer's plan is acceptable and that the developer can invest the money necessary to prepare final plans with the assurance that the final plat and plans will be accepted if they substantially conform to the preliminary plat and plans. It is at this stage that final modifications, adjustments and interpretations are made to the conceptual plan, if any.

(2) **Procedure**:

(a) **Submission**: A request for preliminary plat approval of the planned development shall be submitted to the secretary of the Plan Commission who shall refer the same to the Plan Commission for public hearing, report and recommendation as to whether or not the City Council should issue the special use permit applied for.

(b) **Hearing**: The Plan Commission shall hold a public hearing on the application for a planned development in accord with the procedures set forth below in this Article.

(c) **Recommendations**: Following the public hearing and review of the preliminary planned development plat and supporting data for conformity to these regulations, the Plan Commission shall, within 60 days, unless an extension is requested or approved by the applicant, recommend approval, modification or disapproval, and the reasons therefore, or indicate why a report and recommendation cannot be rendered to the City Council.

(d) **City Council action**: The City Council, after receipt of the preliminary planned development plat from the Plan Commission, shall approve, modify or disapprove the preliminary plat within a period of 60 days unless an extension is requested or approved by the applicant. In the case of approval, or approval with modification, the City Council shall pass an ordinance granting the special use and indicate its approval upon the plat (by signature of the City Clerk), and arrange zoning map modifications as necessary (designating the area involved as a planned development). The City Council may require such special conditions as it may deem necessary to insure conformance with the intent of the planning objectives of the City of Quincy and its environs and the stated objectives of the planned development provisions of this Article.

(e) **Effect of approval**: Approval of a preliminary planned development plat shall not constitute approval of the final plat. Rather it shall be deemed an expression of

approval to the layout submitted on the preliminary plat as a final guide to the preparation of the final plat which will be submitted for the approval of the city and subsequent recording upon the fulfillment of the requirements of these regulations and any conditions of the preliminary approval, if any. The final plat shall be approved as hereinafter provided if it conforms with the preliminary plat.

(f) **Building permit**: No building permit shall be issued for any structure until the final plat has been filed, approved and recorded.

(g) **Subdivision approval**: A subdivision in accordance with Article VII (Subdivisions) of Chapter 13 of this Code may be combined with the plats required hereunder provided that the requirements of that Article are additionally complied with. In that event, it shall be noted on the plat that the plat is being approved both as a planned development and as a subdivision. Unless otherwise prescribed thereon, the approval of the planned development and the subdivision shall be deemed independent of each other. Thus, if the planned development is subsequently abandoned, the subdivision shall nevertheless be considered effective as a subdivision. Such subdivision would be subject to any applicable zoning restrictions, however, as if not a planned development. The property will not, however, be allowed to be treated as a non-conforming use based on any use as a planned development nor any prior non-conforming use. The subdivision plat may be separately recorded as such in order to give effect to this provision. This provision shall not in any way limit the authority of the city hereunder to allow the subdivision and sale of real estate as part of a planned development and to not impose requirements which may otherwise apply to such subdivision pursuant to said Article VII (Subdivisions) of Chapter 13. In other words, a planned development may be adopted for a subdivision established (or being established) under Article VII (Subdivisions) of Chapter 13, or the subdivision of real estate may be made a part of a planned development itself.

29.907 <u>Final plat procedure</u> ---

(1) **Purpose**: The purpose of the final plat is to designate with particularity the planned development. The final plat is intended to be a document which will be recorded. The final plat shows the location of facilities with reasonable accuracy, while the preliminary plat shows the general location of the same facilities.

(2) **Procedure**: The final plat shall be submitted as a planned development plat and shall conform substantially to the preliminary plat as approved and, if desired by the developer, may be submitted in stages with each stage reflecting the approved preliminary plat which is proposed to be recorded and developed; provided, however, that such portion conforms to all requirements of these regulations. The required procedure for approval of the final plat shall be as follows:

(a) **City Engineer**: A final planned development plat and other supporting data required for approval shall be submitted to the City Engineer. Final plats and supporting data shall show in detail the design, location and use of all buildings, facilities and site improvements as well as any additional information as the City Council, the Plan Commission, the City Engineer or the secretary of the Plan Commission may require or have required.

(b) **Certification**: After the review by the City Engineer, the final plat and supporting data shall be certified by the City Clerk, the City Engineer and the secretary of the Plan Commission as being in conformity with these regulations and in agreement with the approved preliminary plat. If the City Clerk, the City Engineer or the secretary of the

Plan Commission shall not consider the plat and plans to be in conformity with the preliminary plat approved, then such official shall refer the plat back to the City Council for the review and approval of any such modifications. Thereafter, the plat shall again be resubmitted as a final plat for approval and certification.

29.908 <u>Recording final plat</u> --- No building permits shall be issued relative to a planned development until the final plat therefore and all other related documents, such as restrictive covenants, shall have been duly recorded in the office of the Recorder of Deeds of Adams County, Illinois. Any construction authorized shall be in full compliance with the final planned development plat as recorded. The ordinance authorizing construction of the planned development shall be effective only upon recording of the final planned development plat and any related supporting documents. The recording of the final plat shall constitute notice to all who deal with the planned development of the restrictions placed upon the land and act as a zoning control device. As such, its requirements shall be enforceable by the city or any other interested party.

29.909 <u>Changes in the planned development</u> --

(1) **Generally**: The planned development project shall be developed only according to the approved and recorded final plat and all supporting data. The recorded final plat and supporting data together with all recorded amendments shall be binding on the applicants, their successors, grantees and assigns and shall limit and control the use of the premises and location of structures in the planned development project as set forth therein.

(2) **Changes**: Changes to the recorded planned development may be made as follows:

(a) **Major changes**: Changes which alter the concept or intent of the planned development including not limited to changes in density, changes in the height of buildings, reductions of proposed open space, changes in total bedroom counts, changes in the development schedule, changes in road standards, or changes in the final governing agreements, provisions or covenants, or other changes may be approved only by submission and reconsideration of a new preliminary and final planned development plat and supporting data and following the preliminary or final plat procedure. If the major change alters data or evidence submitted during the conceptual plan or preliminary plat stage, then the resubmission must begin at the preliminary plat stage. If major changes are proposed, a new public hearing shall be required during resubmission of the plat. All changes to the "original" final plat shall be recorded with the Adams County Recorder of Deeds as amendments to the final plat are reflected in the recording of a new "corrected" final plat.

(b) **Minor changes**: The City Council, after receiving a recommendation thereon from the Plan Commission, may approve minor changes in the planned development which do not change the concept or, intent of the development. Minor changes shall be any change not defined as a major change. The determination of the City Council as to what is a major or minor change shall be a final determination of that question.

(c) **Abandoned**: A planned development may be abandoned by the owner or owners of the land and property involved, provided that the use of such land and property shall thereafter conform with the district zoning requirements otherwise applicable at the time of abandonment. No property will be allowed to be treated as a non-conforming use based on any use as a planned development nor any prior non-conforming use.

29.910 <u>Submission timing and reversion clause</u> ---

(1) **Final plat**: The final plat or plats, if more than one, must be submitted for approval in accordance with agreed to scheduling. The final plat or first final plat, if more than one, must be submitted for final approval not later than one (1) year from the approval of the preliminary plat unless otherwise prescribed by the City Council. Actual construction, if any, as authorized must begin within one (1) year from the date of the approval of the find plat. Actual construction shall require, at a minimum, if buildings are to be constructed, actual work on the components of the buildings and not mere land preparation and architectural planning. In the event that the same is not done, the planned development special use shall be null and void and the subject property shall revert to the zoning classification affixed to that property prior to the issuance of a planned development special use, or the Plan Commission shall initiate such zoning changes as it deems necessary to serve the public interest.

(2) **Conceptual plan and preliminary plat**: If conceptual plan approval is granted and the preliminary plat or first preliminary plat, if more than one, is not submitted for review within one (1) year of said approval or as otherwise prescribed, then the aforementioned procedure dealing with reversion for final plats shall be followed.

(3) **Extensions**: Extensions in the building schedule for individual one (1) year periods may be recommended by the Plan Commission and granted by the City Council. If the City Council so stipulates when acting favorably on a planned development, the Plan Commission may be delegated the authority of granting extensions in the building schedule for periods of up to one (1) year.

(4) **Abandonment**: If a planned development is abandoned or not timely completed, then the subject property shall revert to the zoning classification affixed to the property prior to the issuance of the planned development special use.

29.911 <u>Plats and supporting documentation</u> --

(1) **Generally**: Plats and supporting documentation shall provide all relevant or material information regarding the proposed planned development. Supplemental information may required by any reviewing authority, including, but not limited to, the City Council, the Plan Commission, the secretary of the Plan Commission and the City Engineer. In this Article, when reference is made to plat, that term also includes any supporting documents.

(2) **Conceptual plan**: A conceptual plan shall be prepared to scale and provide a clear understanding of the way in which the property is intended to be developed. The information called for in preliminary and final plats should be considered in preparing and presenting a conceptual plan. Such information is not, however, necessarily required. What should be included is dependent upon the particular planned development involved.

(3) **Preliminary plat**: A preliminary plat shall be prepared to scale and provide a detailed plan of the way in which the property is intended to be developed. The plat shall be prepared by some person qualified to prepare the same and be in a scale of not less than one (1) inch equals 100'. The plan shall specify all information relevant or material to the plan. The following information should be considered in preparing and presenting a preliminary plat. Such information is not, however, necessarily required. What must be included is dependent upon the particular planned development involved.

(a) **Site information**:

1.) Boundary lines -- bearing and distance.

2.) Easements -- location, width and purpose.

3.) Streets on and adjacent t the tract -- street name, right-of-way width, existing or proposed center line elevations, pavement type, walks, curbs, gutters, culverts, etc.

4.) Utilities on and adjacent to the tract -- location, size and invert elevation of sanitary, storm and combined sewers; location and size of water mains; location of gas lines, fire hydrants, electric and telephone lines and street lights; direction and distance to and size of nearest usable water mains and sewers adjacent to the tract showing invert elevation of sewers.

5.) Ground elevation on the tract -- for land that slopes less than one-half percent (1/2%), show one (1) foot contours; for land that slopes more than one-half per cent (1/2%), show two (2) foot contours; also show spot elevations at all breaks in grades, along all drainage channels or swales, and at points of special significance.

6.) Subsurface conditions or the tract (if required by the Plan Commission) location and results of tests made to generally ascertain subsurface soil, rock and ground water conditions; depth to ground water unless test pits are dry at a depth of 5'; location and results of soil percolation tests if individual sewage disposal systems are proposed.

7.) Other conditions on the tract -- water courses, flood plains, marshes, rock outcrop, wooded areas, isolated preservable trees one (1) foot or more in diameter, houses, barns, accessory buildings and other significant features.

8.) Other conditions on adjacent land -- approximate direction and gradient of ground slope, including any embankments or retaining walls; character and location of major buildings, railroads, power lines, towers and other non-residential land uses or adverse influences; owners of adjacent unplatted land; for adjacent platted land refer to subdivision plat by name and show approximate percent builtup, typical lot size and dwelling type.

9.) Zoning -- zoning districts on and adjacent to the tract.

10.) Proposed public improvements -- highways or other major improvements planned by public authorities for future construction on or near the tract.

11.) Open space -- all parcels of land intended to be dedicated for public use or reserved for the use of all property owners with the purpose indicated.

12.) Structures -- general location, purpose and height, in feet or stories, of each building other than single family residences on individually platted lots.

13.) Map data -- name of development, name of site planner, north point, scale, date of preparation and acreage of site.

(b) **Objectives**: A statement of planning objectives to be achieved by the planned development. This statement should include a description of the character of the propose development and the rationale behind the assumptions and choices of the developer.

(c) **Character**: Explanation of the character of the planned development and the manner in which it has been planned to take advantage of the flexibility of these regulations and referencing the general benefits that will accrue to the public as a result of the planned development.

(d) **Ownership**: Statement of present and proposed ownership of all and within the project, including present tract designation according to official records of the Adams

County Recorder of Deeds. A certificate shall be furnished that there are no delinquent taxes constituting a lien on the whole or any part of the property.

(e) **Names**: The names and addresses of the persons to whom the notice of the hearing to be held by the City Council should be sent (developer, designer and the owners of the land immediately adjoining).

(f) **Schedule - development schedule indicating**:

1.) Stages in which project will be built with emphasis on area, density, use and public facilities such as open space to be developed with each stage. Overall design of each stage shall be shown on the plat and through supporting graphic material.

2.) Approximate dates for beginning and completion of each stage.

3.) If different land use type s are to be included within the planned development, the schedule must include the mix of uses to be built in each stage.

(g) **Covenants**: Proposed agreements, provisions or covenants which will govern the use, maintenance and continued protection of the planned development and any of its common open space.

(h) **Density**: Information on the density of residential uses, including the number of dwelling units per acre, the number of dwelling units by type, the number of buildings by type, and the number of bedrooms in each building and dwelling unit type.

(i) **Non-residential use**: Information on the type and amount of ancillary and non-residential uses, including the amount of common open space.

(j) **Service facilities**: Information on all service facilities and off-street parking facilities

(k) **Architectural plans**: Preliminary architectural plans for all primary buildings shall be submitted in sufficient detail to permit an understanding of the style of the development, the design of the buildings, and the number, size and type of dwelling units. Also provide floor area of building types and total ground coverage of buildings.

(l) **Landscaping plans**: Preliminary plans for plant materials, earth sculpturing, berming and aesthetic features shall be submitted.

(m) **Facilities plans**: Preliminary plans or information, adequate to indicate that the proposed development can be serviced by, as appropriate:

1.) Roads, including classification, widths of right-of-way, width of pavement and typical construction details.

2.) Sanitary sewers.

3.) Storm drainage.

4.) Water supply system.

5.) Lighting program.

6.) Sidewalks, paths and cycle trails.

(n) **Tax impact study**: Information on the taxes to be generated by the proposed project and the cost to the various taxing bodies to provide the necessary services to the project.

(o) **Traffic analysis**: Information in the adequacy of the local transportation and thoroughfare system to handle anticipated traffic volumes generated by the planned development. Also, an analysis may be made of the adequacy of the internal vehicular circulation pattern.

(p) **Market study**: Economic feasibility study of the proposed development, including information on land utilization and marketing potential. Evidence may be presented showing the need and feasibility of the proposed development.

(4) **Final plat stage**:

(a) **Final detailed plan**: A final planned development plat or plats, suitable for recording with the Adams County Recorder of Deeds, shall be prepared. The purpose of the final plat is to designate with particularity the land subdivided into conventional lots as well as the division of other land, not so treated, into common open areas and building areas. The finial plat shall include, unless waived by the City Council:

1.) An accurate legal description of the entire area under immediate development with the planned development.

2.) A planned development plat of all lands which are a part of the final plat being submitted, and meeting all the requirements for a final plat. If lands which are a subject of the final plat are to be subdivided, then a subdivision plat is also required either in conjunction with such plat or separately.

3.) An accurate legal description of each separate unsubdivided use area, including common open space.

4.) Designation of the location of all buildings to be constructed with reasonable accuracy.

5.) Certificates, seals and signatures required for the dedication of lands and recording the document.

6.) Tabulation on separate unsubdivided use area, including land area, number of buildings, number of dwelling units, and dwelling units per acre, that is, the density allowed.

(b) **Common open space and similar documents**: All common open space, if any, shall be either conveyed to a municipal or public corporation, conveyed to a not-for-profit corporation or entity established for the purpose of benefiting the owners and residents of the planned development, or retained by the developer with legally binding guarantees in a form approved by the Corporation Counsel, verifying that the common open space will be permanently preserved as an open area. All land conveyed to a not-for profit corporation or like entity shall be subject to the right of said corporation to impose a legally enforceable lien for maintenance and improvement of the common open space. Protective covenants, if any, shall also be duly recorded as a part of the final plat.

(c) **Public facilities**: All public facilities and improvements made necessary as a result of the planned development shall be either constructed in advance of the approval of the final plat or an alternate arrangement made as provided for subdivision improvements. Detailed construction plans shall be submitted to the City Engineer for all public facilities to be built.

(d) **Construction plans**: Detailed plans shall be submitted to the City Engineer and Building Inspector for the design, construction or installation of site amenities, including buildings, landscaping, lakes and other site improvements.

(e) **Construction schedule**: A final construction schedule shall be submitted to the City Engineer for that portion of the planned development for which approval was requested.

29.912 **<u>Standards</u>** --- No planned development shall be authorized unless the City Council shall find and recommend that the following standards will be met. Such standards shall be deemed met on approval regardless of whether such findings are specifically set forth in the Council's findings. The standards are:

(1) The uses permitted by such exceptions as may be requested or recommended are necessary or desirable and appropriate to the purpose of the development.

(2) The uses permitted in such development are not of such nature or so located as to exercise an undue detrimental influence or effect upon the surrounding neighborhood.

(3) All minimum requirements pertaining to residential, commercial, manufacturing or other uses established in the planned development shall be subject to the requirements for each individual classification as established elsewhere in this Chapter, except as may be specifically varied in the approved planned development use.

29.913 <u>Variations of minimum requirements</u> --- With respect to any planned development, the Plan Commission may consider and recommend to the City Council, and the City Council may vary the applicable minimum requirements of the subdivision or other regulations and of any regulations imposed by this zoning chapter. The variations may include, but shall not necessarily be limited to, variations of requirements pertaining to rear yards, side yards, lot area, bulk, intensity of use, street width, curbs, gutters, sidewalks, public utilities and off-street parking. The approval or recommendation of the Zoning Board of Appeals shall not be required.

29.914 <u>Conditions and guarantees</u> --- Prior to granting any special use, the Plan Commission may recommend, and the City Council may stipulate, such conditions and restrictions upon the establishment, location, construction, maintenance and operation of the special use as deemed necessary for the protection of the public interest and to secure compliance with the standards and requirements specified herein or as may be from time to time required. In all cases in which special uses are granted, the City Council shall require such evidence and guarantees as it may deem necessary as proof that the conditions stipulated in connection therewith are being and will be complied with.

29.915 <u>Hearing requirements</u> ---

(1) **Generally**: All hearings required under this Article shall be conducted by the Plan Commission and held within 60 days from the date of the receipt of an application by the secretary of the Plan Commission, complete in all respects. At the request of an applicant prior to the scheduling of a hearing, a hearing may be delayed for up to an additional 60 days.

(2) **Notice of hearing**: The Plan Commission shall cause to be published public notice of the hearing on each proposed planned development at least once, not less than fifteen (15) days nor more than thirty (30) days before such hearing, in a newspaper published within the City of Quincy. The notice shall contain the date and location of the public hearing, the subject property for which the planned development is requested, a brief statement for the use for which the planned development is being requested and shall state that every person in attendance at the hearing shall have an opportunity to be heard, that every “Interested Party” (as defined under Article I of Chapter 29 of the Municipal Code) shall have the right to cross-examine others at the hearing, provided that such Interested Party enters his or her appearance with the Department of Planning and Development no later than three (3) business days before the date of the public hearing. In addition to providing public notice by publication, the Department shall post a sign at the subject property advising the public of the requested action; such sign shall be posted not less than fifteen (15) days prior to the public hearing.

(3) **Notice to property owners**: The applicant shall not less than fifteen (15) days before the date of the public hearing, serve written notice, either in person or by registered or certified mail, return receipt requested, on at least one (1) owner of each property within 250' in each direction of the lot line of the subject property unless waived by the Plan Commission or City Council. Ownership shall be based solely on the tax records of Adams County. The number of feet occupied by all public roads, streets, alleys and other public ways shall be excluded in computing the 250' requirement; provided further that in no event shall this requirement exceed 400', including public streets, alleys and other public ways. Said notice shall contain the same information as is required under subparagraph (2) above for the public hearing notice. If, after a bona fide effort to determine such address by the applicant, the owner of the property on which notice is served cannot be found at his, or its last known address, or the mailed notice is returned because the owner cannot be found at the last known address, the notice requirements of these provisions shall be deemed satisfied. Proof of giving notice hereof by affidavit shall be filed with the secretary of the Plan Commission. A failure to comply with the provisions of this subsection shall not affect or invalidate any approval of a planned development and additionally may be waived by the City Council or Plan Commission.

(4) **Continuation of hearing**: A scheduled hearing may be continued in the discretion of the hearing body involved, that is, the Plan Commission. A request by an applicant for a continuation may be granted only for just cause. Any such request must be made in person to the Plan Commission or in writing setting forth the reasons for the request. If an applicant fails to appear at the scheduled hearing, the application may be denied by the Plan Commission and such denial reported to the City Council.

(5) **Fees**: Except in those cases where a planned development is requested by the city, a fee of $200.00 shall be paid to the city to defray the costs of publishing and posting notice of the proposed planned development and the costs of maintaining a record of the public hearing. Such fee shall be paid to the secretary of the Plan Commission.

29.916 <u>Effect of denial of planned development</u> --- After a public hearing has been held and a planned development denied in whole or in part by the City Council, an application for the same shall not be resubmitted for a period of one (1) year from the date of such denial, unless allowed by the City Council. In general, resubmission shall be allowed only if there is substantial new evidence or proof of changed conditions found to warrant resubmission.

29.917 <u>Subdivision</u> --- This Article does not repeal Article VII of Chapter 13 of the Municipal Code of Quincy, but may be used as an alternative procedure for subdividers.

ARTICLE X LANDMARKS AND HISTORIC DISTRICTS

Section 29.1001 <u>Declaration</u> --- Historically and architecturally significant buildings throughout this community are tangible links with the nation's past and help provide a sense of identity and stability that is often missing in this era of constant change by highlighting a community's roots and unique character, historic preservation reinforces the traditional American values of neighborhood and family. Preservation is an anchor that keeps communities together and re-establishes pride and economic vitality.

The study of relics, burial ground, and village sites indicates that man from prehistoric times has selected the site of Quincy as a desirable location to live.

The westernmost city in Illinois, Quincy is located along the eastern shore of the Mississippi River atop 100 foot limestone bluffs which overlook a wide expanse of the river and a natural harbor.

John Wood founded Quincy in 1822, settling on land that was part of a large area set aside as a Military Bounty Tact for the War of 1812. The little settlement was first called The Bluffs but was renamed Quincy in 1825 when Adams County was incorporated. The county, the city, and what is now Washington Park were named in honor of the then current President of the United States, John Quincy Adams.

A few of the events that were important to Quincy's history in the early years were: the Blackhawk War, the Moorman involvement, the Lincoln-Douglas debate in 1858, and the anti-slavery movement. Quincy was a stop on the underground railroad. Prosperous industries and commercial establishments including breweries, stove manufacturers, steamboat construction companies, farm implement businesses, and wholesale and retail stores helped in the development of the community. Quincy's growth encouraged German, English, Scotch, and Irish immigrants to settle in the city and their craftsmen helped in the building of many homes and commercial buildings.

During the Civil War, Quincy was important as a supply center. Injured soldiers were brought from the battlefield and treated in hospitals built and manned by Quincy residents, and four regiments were trained and stationed in camps located to the north, south and east of the city. John Wood had just completed his term as Governor in 1861, and was named Quartermaster General of the State thus becoming the highest ranking officer in Illinois. Abraham Lincoln appointed Wood as the Illinois delegate for the Civil War Peace Conference.

Following the War, Quincy entered its "Gilded Age", a period of great prosperity due to the growth of the railroad and industry. By 1875, Quincy was the second largest city in Illinois.

Neighborhoods developed first in the south, then north, and finally east in Quincy. The architecture reflects a variety of styles from log cabin, Federal, Greek Revival, Gothic and Italianate to Romanesque, Second Empire, Queen Anne, Colonial and Classical Revival, Bungalow, Prairie Style, Shingle Style, Stick Style, Quincy Style, Art Modern, and International Style.

Quincy is in the distinguished position of being recognized as one of the three cities in the State of Illinois having an outstanding collection of architecturally and historically significant structures. Equally important is the recognition of neighborhoods that developed at various time periods in the history of Quincy, and the maintenance of these properties and areas develops a sense of well being, stability, and community pride.

It is hereby found and declared by the City Council of the City of Quincy that the goals of historic preservation, community development and economic growth are compatible and the City of Quincy intends to further the use of preservation as a tool to help revitalize and strengthen the City's economy.

It is declared by the City Council of the City of Quincy that it is required in the interest of the public's health, safety and general welfare, and is necessary to sound urban planning that those properties and improvements having special historical, architectural, community or aesthetic significance, be designated, preserved, enhanced and continued or restored to use, it being further declared that the City's economic vitality and tax base cannot be maintained and enhanced without regard for Quincy's heritage and older neighborhoods.

29.1002 <u>Purpose</u> ---

(1) To survey, designate, identify, preserve, rehabilitate, enhance and perpetuate those properties and improvements which reflect the historical, cultural, artistic, social, ethnic or other heritage of the nation, state or community, or which may be representative of an architectural style or engineering method inherently valuable for the study of a period, craftsmanship, type of construction or use of indigenous materials.

(2)To promote the public health, safety and welfare.

(3)To advance sound urban planning.

(4) To stabilize and improve the economic vitality and value of the designated properties and improvements in particular and of the City of Quincy in general.

(5) To foster civic pride in the beauty and accomplishments of the past and to promote the education of the general public concerning historical and architectural preservation.

(6)To enhance the City's attraction to visitors and thereby stimulate tourism, commerce and industry.

(7) To encourage the continued private ownership and use of designated properties and improvements to the maximum extent consistent with the above objectives.

29.1003 <u>Definitions</u> --- Words and phrases as used in this Article shall have the following meanings:

(1) **Alteration**: Any act or process that changes the exterior architectural appearance of a property.

(2) **Area**: A specific geographic division of the City of Quincy.

(3) **Certificate of Appropriateness**: A certificate issued by the Quincy Preservation Commission indicating its approval of plans for alteration, construction, removal or demolition of a Landmark or of a property within a Historic District as defined by this Article.

(4) **Certificate for demolition**: A certificate issued by the Quincy Preservation Commission authorizing a demolition.

(5) **Construction**: The act of adding to a structure for which a building permit is required. This term specifically shall not include the building of a new principal or accessory structure on a lot or property.

(6) **Demolition**: Any act or process which destroys in part or in whole a Landmark or a structure within a Historic District.

(7) **Designation**: The naming, by ordinance, of a Landmark of Historic District.

(8) **Economic incentives**: Any form of federal, state, or local assistance available to owner of designated Landmarks or of property within designated Historic Districts whether in the form of financing, property tax relief, income tax advantages, grants, or other forms of assistance.

(9) **Exterior architectural appearance**: The architectural character and general composition of the exterior of a Landmark or of a property within a Historic District including but not limited to the kind, form and texture of the building material and the style, design and character of all windows, walls, roofs, doors, light fixtures, signs and appurtenant elements.

(10) **Historic District**: An area of contiguous properties designated as a "Historic District" by ordinance of the City Council, pursuant to procedures prescribed in this Article, and which contains within definable geographic boundaries one or more properties that may qualify as Landmarks or which has within its boundaries properties which, while not of such historic and/or architectural significance to be designated as Landmarks, nevertheless contribute to the distinctive historical or architectural character of the area.

(11) **Landmark**: A single property, structure, site, object or improvement designated as a "Landmark" by ordinance of the City Council, pursuant to procedures prescribed in this Article, which is worthy of rehabilitation, restoration, and preservation because of its historic and/or architectural significance to the City of Quincy.

(12) **Nomination**: A determination by the Quincy Preservation Commission at the preliminary review that an application merits further consideration for designation.

(13) **Property**: The real property and any and all improvements, structures, objects or works of art situated on it.

(14) **Property owner**: The person or persons, corporations, partnerships or other legal entities listed on the property tax record of and for Adams County.

(15) **Quincy**: Any reference to Quincy, the City of Quincy, the City or community shall refer to the corporate boundaries of the City of Quincy and the area within one and one-half miles of said boundaries.

(16) **Removal**: Any relocation of a structure on its site or to another site.

(17) **Secretary**: The person appointed by the Mayor to undertake the responsibilities assigned by this Article, and to assist the Quincy Preservation Commission in the implementation of this Article.

(18) **Significant historical or architectural feature**: A structural, architectural or design element, including, but not limited to, doors, windows, bays, porches, staircases, roofs, cornices cupolas, chimneys, gables, siding, and masonry, listed in the ordinance designating a Landmark or Historic District and requiring a Certificate of Appropriateness before any alteration, demolition, construction or removal.

(19) **Specific standards for review of exterior alterations**: A set of guidelines and regulations interpreting and applying the standards in paragraph 2 of Section 29.1011 to the exterior architectural appearance and the significant historical or architectural features of a designated Landmark or Historic District.

(20) **Substantial alteration**: Any act or process which removes, obscures or irrevocably changes a significant historical or architectural feature/structure.

29.1004 <u>General provisions</u> ---

(1) No provisions herein shall be construed as repealing any other code or ordinance of the City of Quincy, and any permit or license required thereunder shall be

required, in addition to any Certificate of Appropriateness or Certificate for Demolition which may be required hereunder. Where a Certificate of Appropriateness or Certificate for Demolition is required, no such other permit or license shall be issued by any department of the City of Quincy before a Certificate has been issued by the Quincy Preservation Commission as herein provided.

(2) Whenever an application for the designation of a Landmark or Historic District is filed with the City, that application shall be considered by the Quincy Preservation Commission rather than by the Quincy Plan Commission. Additionally, once a Landmark or Historic District has been designated, the Quincy Preservation Commission shall be given the opportunity to review and comment on all matters affecting that property which are normally regulated or administered by some other board or commission of the City including, but not necessarily limited to, the Quincy Plan Commission, the Zoning Board of Appeals and the Quincy Building Commission, The authority of the Quincy Preservation Commission shall not be deemed to limit, in any way, the authority of the Mayor or City Council. Further, it shall not be deemed to limit any enforcement or similar authority of any official or officer of the City.

29.1005 <u>Surveys and research</u> ---

(1) The Quincy Preservation Commission shall undertake surveys and research in the City of Quincy to identify neighborhood areas, places, structures, works of art and improvements which have historical, aesthetic, architectural, archaeological, or cultural importance, interest, or value.

(2) As part of the surveys, the Quincy Preservation Commission shall compile appropriate descriptions, facts, photographs and lists.

(3) The lists may include single structures or sites, portions of structures, streets and boulevards, man-made or natural landscape elements, works of art, or combinations thereof.

(4) In undertaking surveys the Quincy Preservation Commission shall place particular emphasis upon the evaluation and incorporation of prior surveys, findings, and studies already completed.

(5) The Quincy Preservation Commission shall develop a plan and schedule for completing a survey of the City of Quincy to identify potential Landmarks. The Quincy Preservation Commission shall then systematically identify potential Landmarks and adopt procedures to nominate them in groups based upon one or more of the following criteria:

(a) The potential Landmarks in one neighborhood or distinct geographical area of the City of Quincy.

(b) The potential Landmarks associated with a particular person, event or historical period.

(c) The Landmarks of a particular architectural style or school, or of a particular architect, engineer, builder or designer.

(d) Such other criteria as may be adopted by the Quincy Preservation Commission to assure systematic survey and nomination of potential Landmarks within the City of Quincy.

29.1006 <u>Criteria for designation of Landmarks and Historic Districts</u> --- The Quincy Preservation Commission shall consider any criteria adopted by the Quincy Preservation

Commission when reviewing a prospective Landmark or Historic District for designation, including, but not necessarily limited to, the following:

(1) Significant value as part of the historical, cultural, artistic social, economic, or other heritage of the nation, state or community; or

(2) Association with an important person or event in national, state or local history; or

(3) Representation of the distinguishing characteristics of an architectural style, period, craftsmanship or method of construction, or embodiment of particularly fine craftsmanship in construction; or

(4) Notable or influential work of a master builder, designer, architect or artist; or

(5) Identification in the community as a familiar visual feature owing to its unique location or physical characteristics.

29.1007 <u>Applications for nominations</u> --- Any person, group of persons, or association may apply to the Quincy Preservation Commission for the designation of a Landmark or Historic District. Applications for a nomination shall be filed with the secretary on forms provided by the Quincy Preservation Commission. Persons wishing guidance or advice prior to completing an application may contact the secretary, chairperson of the Quincy Preservation Commission or chairperson of the Historic District Committee. Based upon the surveys or research undertaken pursuant to Section 29.1005, the Quincy Preservation Commission may also apply for a nomination of a Landmark or Historic District. At a minimum, the application shall include the following:

For Landmark:

(1) The name and address of the property owner.

(2) The legal description and common street address of the property.

(3) A written statement describing the property and setting forth reasons in support of the proposed designation.

(4) Documentation that the property owner has been notified or consents to the application for designation.

(5) A list of the significant exterior architectural features that should be protected.

(6) An application fee as may be established by the Quincy Preservation Commission to cover publication and notification expenses.

For a Historic District:

(1) The names and addresses of the property owners.

(2) A map delineating the boundaries of the area to be designated.

(3) A written statement describing the area and properties within the proposed Historic District and setting forth reasons in support of the proposed designation.

(4) A list of the significant exterior architectural features of properties in the district that should be protected.

(5) An application fee as may be established by the Quincy Preservation Commission to cover publication and notification expenses.

29.1008 <u>Preliminary review of application</u> ---

(1) The secretary shall schedule a preliminary review of the application to be held by the Quincy Preservation Commission within forty-five (45) days following its receipt.

(2) The applicant, and the property owner in the case of a proposed Landmark, shall be notified of the time and place of the preliminary review at least seven (7) days prior to

the date. A copy of the application together with written notice of the time and place of the preliminary review and a request for a comment shall be sent to the Quincy Plan Commission and to the head of each city department that may have an interest in the application.

(3) At the preliminary review the Quincy Preservation Commission shall determine whether the application merit, further consideration as a nomination. If the Quincy Preservation Commission finds that the application does not merit further consideration as a nomination, it shall notify the applicant. The application may not be resubmitted for a period of six (6) months.

29.1009 <u>Designation</u> ---

(1) **Notice of nomination**: Within three (3) working days following a determination by the Quincy Preservation Commission that a Historic District or Landmark merits further consideration, the secretary shall notify the property owners of the nomination. Notice to property owners within Historic Districts shall be by regular mail. Notice to the property owner of a Landmark shall be by certified mail and shall include an owner consent form.

(2) **Standards and incentives**: The Quincy Preservation Commission shall adopt procedural regulations for establishing a subcommittee to meet with property owners following notice of nomination to discuss specific standards and incentives. Within the notice of nomination, the Quincy Preservation Commission shall extend an invitation to each property owner to attend a meeting to discuss possible standards and incentives, including economic incentives, for the proposed district.

Following the meeting with the property owners, the subcommittee shall make recommendations to the full Quincy Preservation Commission concerning specific standards and incentives. These standards and incentives will be presented at the public hearing required by paragraph 3 of this Section.

(3) **Public hearing on Historic District designation**: The public hearing on an application for a Historic District shall be scheduled by the secretary no sooner than 15 days and no later than 45 days after nomination. The secretary shall so notify the property owners by regular mail, and inform them of the date, time and location of the public hearing.

The purpose of the hearing is to explain to the general public and to the property owners the purpose and effect of designation; to explain and take testimony concerning the criteria for designation; to explain the review process for any alteration, construction, demolition or removal affecting the exterior architectural appearance; to present and discuss any specific standard, for review of exterior alterations; to discuss economic incentives that would be available from local, state, federal, or private sources; and to hear testimony from any interested party concerning the proposed designation.

(4) **Owner consent to Historic District designation**: The Quincy Preservation Commission shall make very effort to obtain owner consent for designation of proposed Historic Districts. Owner consent shall be indicated on a form prepared by the Quincy Preservation Commission. Within 3 days following the public hearing an owner consent form shall be sent by certified mail to all property owners within the proposed Historic District who did not receive such a form at the public hearing. The owner may approve or disapprove the proposed designation on the owner consent form to the secretary.

If the property owner does not respond in 20 days from the date the consent form is mailed, the Quincy Preservation Commission shall make every reasonable effort to contact

the property owner by telephone or in person. All owner consent votes will be counted within 30 days from the date the consent forms are mailed. In order for the Quincy Preservation Commission to recommend a Historic District to the Quincy City Council for designation, 66-2/3% of all the property owners who respond must vote affirmatively.

(5) **Public hearing on Landmark designation**: A public hearing as set forth in paragraph 3 of this Section covering Historic Districts shall also be held for a nominated Landmark. The purpose of the public hearing shall be the same as stated in paragraph 3 above, and, in addition to determine if the Quincy Preservation Commission should recommend the designation of the proposed Landmark to the City Council over the owner's objection.

(6) **Owner consent to Landmark designation**: The owner may approve or disapprove the proposed designation on the owner consent form which may be returned to the secretary at any time prior to 10 days following a public hearing. Failure to respond will be considered a disapproval.

(7) **Certified mail**: The Quincy Preservation Commission will pay for the cost of certified mail for sending owner consent forms as set forth in this Article. The applicant shall be responsible for providing a correct list of names and addresses of the property owners of a nominated Landmark or Historic District and shall assist the Quincy Preservation Commission staff in preparing the owner consent mailing.

(8) **Public notification**: Notice of the date, time, place and purpose of the public hearing required by either paragraph 3 or 5 above shall also be published in a newspaper of general circulation in the City of Quincy stating the legal description and common street address of the property in the case of a proposed Landmark, and the boundaries of a proposed Historic District. The notice shall appear no less than 5 days and no more than 10 days prior to the scheduled date of the hearing.

(9) **Decision of the Quincy Preservation Commission**: The Quincy Preservation Commission shall recommend or not recommend to the Quincy City Council that a Landmark or Historic District be officially designated. Such action shall occur no sooner than 30 days and no later than 45 days after the public hearing held pursuant to paragraph 3 or 5 above. Within 3 working days following the decision of the Quincy Preservation Commission, the secretary shall notify the applicant and the property owners of the decision by regular mail.

(10) **Report to the Quincy City Council**: The Quincy Preservation Commission shall send a written report to the Quincy City Council within 30 days following its decision. The report shall summarize the reasons for the Quincy Preservation Commission's decision. In the event of a decision to recommend designation, the report shall be accompanied by a proposed designation ordinance that shall include a list of the significant exterior historical or architectural features, and specific standards for the review of exterior alterations recommended by the Quincy Preservation Commission, any local economic incentives recommended by the Quincy Preservation Commission, and the types of alterations not requiring a building permit that shall require a Certificate of Appropriateness pursuant to Section 29.1011.

(11) **Quincy City Council designation by ordinance**: The Quincy City Council shall review the report and recommendation of the Quincy Preservation Commission and either accept or eject the recommendation. Designation of a Landmark or Historic District shall be by ordinance. The ordinance shall contain the following information: the legal description and common street address of a designated Landmark; a description of the

boundaries of a designated Historic District; a list of the significant historical or architectural features of any designated Landmark or of properties within a designated Historic District for which protection is to be provided; a list of the types of alterations, constructions, demolitions or removals affecting significant historical or architectural features, other than those requiring a building permit or demolition permit, for which a Certificate of Appropriateness shall be required; specific standards for the review of actions affecting the exterior architectural appearance; and any local economic incentives determined necessary by the Quincy City Council.

(12) **Notification of Quincy City Council action**: The secretary shall send by regular mail a copy of the resolution or ordinance passed by the Quincy City Council to the applicant and to the property owner(s) within 3 working days following the Quincy City Council action.

(13) **Maintenance of records**: The Quincy Preservation Commission shall maintain a book containing the legal description of each Landmark and the boundaries of a Historic District designated by ordinance; said book shall be located in the Recorder of Deeds Office for Adams County, and in the office where the official zoning map of the City of Quincy is kept.

29.1010 Amending and rescinding designation procedure of a Landmark or Historic District --- The designation by ordinance of a Landmark or a Historic District map only be rescinded or amended by ordinance enacted by the Quincy City Council upon recommendation of the Quincy Preservation Commission using the same procedure as set forth in Section 29.1009, and according to the same standards and considerations for designation.

29.1011 Protection provided Landmarks and Historic Districts ---

(1) **Certificate of Appropriateness**.

(a) Actions requiring a Certificate of Appropriateness: A Certificate of Appropriateness issued by the Quincy Preservation Commission shall be required for the following actions affecting the exterior architectural appearance of any Landmark or property within a Historic District:

1.) Any alteration to the significant historical or architectural features listed in the designating ordinance.

2.) Any exterior construction or alteration requiring a building permit from the City of Quincy.

3.) Any substantial alteration to the exterior portion of the property.

(b) Actions not requiring a Certificate of Appropriateness: Unless the action is covered by the specific standards as outlined in paragraph (1)(a) 1.) of this Section, actions which shall not require a Certificate of Appropriateness, and are not considered substantial alterations, include the following:

1.) Any construction, alteration, or removal limited to the interior portions of the structure.

2.) Actions which constitute landscaping, groundskeeping, or similar exterior activities limited to the environs of the designated structure or structures.

3.) Actions commonly considered to be normal or routine owner maintenance to include painting, staining or cleaning of exterior surfaces (with the exclusion of sandblasting of surfaces); repair or replacement of damaged or unserviceable

items so long as the repair or replacement is consistent with the original item; and the installation of storm windows.

(c) Applications for Certificate of Appropriateness:

1.) An application for a Certificate of Appropriateness shall be obtained from and filed with the secretary at the office of the Quincy Preservation Commission. Any applicant can request information from the secretary, chairman, or any member of the Quincy Preservation Commission regarding the application.

2.) Every application for a building permit, including any available accompanying plans and specifications affecting the exterior architectural appearance of a nominated or designated Historic District, shall be sent by the Inspection Department to the secretary within 3 working days following receipt of the application by the Inspection Department. The Inspection Department shall not issue the building permit until a Certificate of Appropriateness has been issued by the Quincy Preservation Commission.

3.) This Section shall apply to nominated Landmarks and nominated Historic Districts from the date the Quincy Preservation Commission determines that an application for nomination merits further consideration pursuant to Section 29.1008.

(d) Commission votes on Certificate of Appropriateness: The secretary shall immediately forward an application for a Certificate of Appropriateness to the Quincy Preservation Commission for its review at its next regular meeting. At that meeting the Quincy Preservation Commission shall vote to approve or deny the application.

(e) Denial of Certificate of Appropriateness: A denial of a Certificate of Appropriateness by the Quincy Preservation Commission shall be sent to the applicant accompanied by a statement from the secretary for the reasons of the denial.

(f) Commission meets with property owner: The Quincy Preservation Commission shall make recommendations to the applicant concerning modifications, if any, in the proposed action which would cause the Quincy Preservation Commission to reconsider its denial, and shall confer with the applicant and attempt to resolve as quickly as possible the difference between the objectives of the owner and the goals of the Quincy Preservation Commission.

(g) Second vote: Should these discussions fail to resolve the differences, there shall be a second vote on the application by the Quincy Preservation Commission at the next regularly scheduled meeting. A vote by a majority of the appointed and confirmed members of the Quincy Preservation Commission to deny the Certificate of Appropriateness shall be the final decision unless appealed pursuant to Section 29.1014. If less than a majority of the appointed and confirmed members of the Quincy Preservation Commission vote to deny the Certificate of Appropriateness, the application shall be considered approved.

(h) Applicant and Inspection Department informed of decision: The secretary shall inform the applicant and the Inspection Department in writing of the Quincy Preservation Commission's decision within 3 working days following the second vote.

(i) Issuance of Certificate of Appropriateness: Upon approval of an application, the secretary shall issue a Certificate of Appropriateness within 3 working days and forward copies to the applicant and to the Inspection Department.

(j) Appeal from denial of Certificate of Appropriateness: Upon denial of an application, the applicant may appeal the decision as provided for in Section 29.1014.

(k) Subcommittee: The Quincy Preservation Commission may establish a subcommittee of no fewer than five of its members to review routine applications for a

Certificate of Appropriateness when delay to the next regular meeting would create unnecessary inconvenience to the applicant. A Certificate of Appropriateness may be issued prior to the next regular meeting upon the signature of 80% of the members of the subcommittee.

(2) **Standards for review of applications**: In considering an application for a Certificate of Appropriateness, the Quincy Preservation Commission shall be guided by the following general standards in addition to any other specific standards in the ordinance designating the Landmark or Historic District. These general standards shall apply even in the absence of any specific standards for a Landmark or a Historic District.

(a) Every reasonable effort shall be made to provide a compatible use for a property which requires minimal alteration of the building, structure, or site and its environment, or to use a property for its originally intended purpose.

(b) The distinguishing original qualities or character of a building, structure, or site and its environment shall not be destroyed. The removal or alteration of any historic material or distinctive architectural feature should be avoided when possible.

(c) All buildings, structures, and sites shall be recognized as products of their own time. Alterations that have no historical basis and which seek to create an earlier appearance shall be discouraged.

(d) Changes which may have taken place in the course of time are evidence of the history and development of a building, structure, or site and its environment. These changes may have acquired significance in their own right, and this significance shall be recognized and respected.

(e) Distinctive stylistic features or examples of skilled craftsmanship which characterize a building, structure, or site shall be treated with sensitivity.

(f) Deteriorated architectural features shall be repaired rather than replaced, wherever possible. In the event the replacement is necessary, the new material should match the material being replaced in composition, design, color, texture, and other visual qualities. Repair or replacement of missing architectural features should be based on accurate duplication of features, substantiated by historic, physical, or pictorial evidence ratter than on conjectural designs or the availability of different architectural elements from other buildings or structures.

(g) The surface cleaning of structures shall be undertaken with the gentlest means possible. Sandblasting and other cleaning methods that will damage the historic building materials shall not be undertaken.

(h) Every reasonable effort shall be made to protect and preserve archaeological resources affected by or adjacent to, any project.

(i) Contemporary design for alterations and additions to existing properties shall not be discouraged when such alterations and additions do not destroy significant historical, architectural or cultural material, and such design is compatible with the size, scale, color, material and character of the property neighborhood or environment.

29.1012 <u>Demolition</u> ---

(1) **Actions requiring a Certificate for Demolition**: A Certificate for Demolition from the Quincy Preservation Commission shall be required for any demolition or removal in whole or in part which requires a permit from the City of Quincy. This Section shall apply to a nominated or designated Landmark or Historic District from the date the Quincy

Preservation Commission determines that an application for nomination merits further consideration pursuant to Section 29.1008.

(2) **Application for a Certificate for Demolition**:

(a) An application for a Certificate for Demolition shall be obtained from and filed with the secretary at the office of the Quincy Preservation Commission. Any applicant can request information from the secretary, chairman, or any member of the Quincy Preservation Commission.

(b) Every application for a demolition permit, including, when available, accompanying plans and specifications affecting the nominated or designated Landmark or a property within a nominated or designated Historic District, shall be sent by the Inspection Department to the secretary within 3 working days following receipt of the application by the Inspection Department. The Inspection Department shall not issue a permit until a Certificate for Demolition has been issued by the Quincy Preservation Commission.

(3) **Secretary notifies commission**: The secretary shall notify the Quincy Preservation Commission of any application for a Certificate for Demolition.

(4) **Public hearing**: Upon receipt of the application for a Certificate for Demolition, the Quincy Preservation Commission shall schedule a public hearing at the next regularly scheduled meeting. Notice of the public hearing shall be given to the applicant and the property owner in the same manner as required by paragraph 3 of Section 29.1009. In the event the application is received less than 15 days to the regularly schedule meeting, that application shall be heard at the following regularly scheduled meeting. At the public hearing the Quincy Preservation Commission shall hear evidence and testimony and consider the following issues:

(a) The condition of the property and how the condition affects the feasibility of preservation, rehabilitation, or restoration of the property;

(b) The general feasibility of preservation, rehabilitation, or restoration and any economic hardship to the property owner from the denial of a Certificate of Demolition;

(c) Ways in which the interest of the public in preserving the property may be balanced against the interests of the owner of the property;

(d) Alternatives to demolition;

(e) The interest or quality in the property that would make demolition a loss to the general community;

(f) Any unusual or uncommon design elements and materials that cannot be reproduced or reproduced only with great difficulty;

(g) Whether the property is of such interest or quality that it is listed or could be listed on the National Register of Historic Places, Illinois State Register, or as a local Landmark;

(h) Whether retention of the structure would help preserve and protect a historic place or area of historic interest in the City of Quincy;

(i) Whether retention of the structure would promote the general welfare of the City by encouraging study of American and local history, architecture and design or by developing an understanding of the importance and value of the American culture and heritage as well as by making the City a more attractive and desirable place in which to live.

(5) **Commission votes on Certificate for Demolition**: Following the public hearing, the Quincy Preservation Commission shall vote to approve or deny the Certificate for Demolition or to apply for a delay pursuant to paragraph 9 of this section.

(6) **Applicant and Inspection Department informed of decision**: The secretary shall inform the applicant and the Inspection Department in writing of the Quincy Preservation Commission's decision within 3 working days.

(7) **Issuance of Certificate for Demolition**: Upon approval of an application, the secretary shall issue a Certificate for Demolition within 3 working days and forward copies to the Inspection Department.

(8) **Appeal from denial of Certificate for Demolition**: Upon denial of an application, the applicant may appeal the decision as provided for in Section 29.1014.

(9) **Alternatives**: Rather than deny or approve an application for the Certificate for Demolition, the Quincy Preservation Commission may apply to the Quincy City Council to delay or order a postponement of any demolition while it investigates alternatives to granting a certificate and negotiate with the property owner to find a means to prevent demolition. If after a reasonable period of time, not in any case to exceed 6 months from the date of the receipt of the application, no alternative agreement has been reached with the applicant, the Quincy Preservation Commission shall issue a Certificate for Demolition.

29.1013 <u>Review and comment</u> --- The Quincy Preservation Commission shall also review and comment upon proposed public improvement projects to be implemented by the City of Quincy or any of its departments or agencies. The Quincy Preservation Commission shall consider the effect of the proposed project on the exterior architectural appearance of nominated or designated Landmarks or of properties in a Historic District, and may hold a public hearing to receive testimony from property owners and the general public concerning the effect of the proposed project on the historic or architectural character of the Landmark or Historic District. The Quincy Preservation Commission shall report the results or its consideration to appropriate City department and agencies and to the Quincy City Council and make recommendations, if appropriate, for modifications to the proposed project that will minimize its effect on a Landmark or Historic District.

29.1014 <u>Appeals</u> --- Any applicant denied a Certificate of Appropriateness or a Certificate for Demolition may appeal the final decision of the Quincy Preservation Commission to the Quincy City Council within 30 days. The Quincy City Council, after reviewing the circumstances of the application and the reasons for the denial may by resolution affirm the decision of the Quincy Preservation Commission or order the Quincy Preservation Commission to issue a certificate. The secretary shall issue the certificate within 5 days after receipt of the Quincy City Council order.

29.1015 <u>Designation of 428 Maine Street</u> -- That 428 Maine Street, Quincy, Illinois is hereby designated a Landmark.

That the legal description of 428 Maine Street is as follows:

A part of Lots One (1) and Two (2) in Block Nineteen (19) in the Original Plat of the Town, now City of Quincy, bound and described as follows: Commencing at a point on the North line of said Lot Two (2) which is Forty-nine (49) feet East of the Northwest corner thereof, running thence South One Hundred Eighty-eight (188) feet to an alley, thence East along the North line of said alley Fifty-three (53) feet, running thence North

One Hundred Eighty-eight (188) feet to the North line of said Lot One (1), thence West along the North line of said lots One (1) and Two (2), Fifty-three (53) feet to the place of beginning, situated in the County of Adams and State of Illinois.

That among the historical or architectural features which will be provided protection are as follows:

The pink Missouri granite facade and other numerous areas of skillfully carved Romanesque Revival decorative detail. A pair of ornamental iron-on-oak doors and several sinuous curvilinear grilles of wrought iron. A pressed tin and curved terra cotta roof. The building is known as The State Savings Loan & Trust Co. building. The east side being built in 1892, architects being Patton & Fischer; the west side being built as an addition in 1906 the architect being Ernest Wood; the style being Romanesque Revival. The owner at the time of designation is Robert Mays.

29.1016 <u>Designation of 1651 Maine Street</u> --- That 1651 Maine Street, Quincy, Illinois, is hereby designated as a landmark.

That the legal description of said premises is as follows:

Lots Thirty-nine (39) and Forty (40) in Nevin's Addition to the City of Quincy, except the East Fifteen (15) Feet of the South Half of said Lot Forty (40) and the South Five (5) Feet of the East Fifteen (15) of the North Half of said Lot Forty (40) and except the West Two (2) Feet of the South half of said lot Thirty-nine (39) and except the East Sixty (60) Feet of the West Sixty-two (62) Feet of the South One-Hundred fifty (150) Feet of said Lot Thirty-nine (39); together with any and all right, title, interest and estate which the Grantor may have or hereinafter acquire in and to said last excepted tract by reason and by virtue of the limitation, qualification, condition and other provisions with respect to the erection of buildings and structures thereon, all as contained in two certain Deeds, namely a Deed from Octavia Monroe Bonfoey and Lawrence P. Bonfoey to Edward Monroe, dated December 12, 1921 and recorded December 12, 1921 in Book 236 of Deeds, at page 40 in the Recorder's Office of Adams County, Illinois and a Deed from Octavia Monroe Bonfoey and Lawrence P. Bonfoey to Quincy College and Seminary Corporation dated May 6, 1947 and recorded May 20, 1947 in Book 318 of Deeds at page 181 in the Recorder's Office of Adams County, Illinois, situated in the County of Adams, in the State of Illinois.

That among the historical or architectural features which will be provided protection are as follows:

A pair of arched windows centered on second floor, and all other doors and windows. A pair of brackets with built-in gutters on main Forty (40) feet by Forty feet section, and single brackets on second section. The original front porch roof and columns. The original east porch roof and columns. The original chimneys and original tin roof, except for one shingled section. All of the original cherry woodwork and stained glass. The Carriage House.

The building is known as the Charles Henry Bull House. The house was built c. 1852, the builder being George Baughman; the style being Italianate. The owner at the time of designation is George Irwin.

29.1017 <u>Designation of 332 Maine Street</u> – That 332 Maine Street, Quincy, Illinois, is hereby designated a Landmark.

That the legal description of 332 Maine Street is as follows:

Lot One (1), except the South Forty (40) feet thereof, and the East Twenty-two (22) feet and One (1) inch of the North One Hundred Eight (108) feet and Six (6) inches if Lot Two (2), all in Block Eighteen (18) in the Original Town, now City of Quincy, situated in the County of Adams and State of Illinois.

That among the historical or architectural features which will be provided protection are as follows:

The well-massed lines of gray stone, some roughcut and some featuring Romanesque Revival detailing. The gray slate roof. The circular corner three story tower. Ornamental iron railings, and stone supports at the main entrance.

The building is known as the Quincy Public Library Building.

The building was built in 1888, with the architects being Patton & Fischer; the style is Romanesque Revival. The owner at the time of designation is the Gardner Museum of Architecture and Design.

29.1018 <u>Designation of 126 North Eighth Street</u> --- That 126 North Eighth Street, Quincy, Illinois is hereby designated as a Landmark.

That the legal description of 126 North Eighth Street is as follows:

Lot number Seventeen (17) and all of Lot number Eighteen (18) excepting the South Twenty-seven (27) feet of said Lot Eighteen (18), all in Block number One (1) in Samuel P. Church's Addition to the Town, now City of Quincy, together with and subject to any and all privileges and appurtenances and alley rights pertaining and appurtenant thereto, as more fully set forth in deeds from Samuel P. Church and Margaretta E. Church recorded in the Office of the Recorder of Deeds in and for Adams County, Illinois in Book J of Deeds, at page 607, in Book K of Deeds at page 115, and Book Q of Deeds, at page 530; and the North Five (5) feet if the South Twenty-seven (27) feet of Lot Eighteen (18) in Block One (1) in Church's Addition to the City of Quincy, situated in the County of Adams, in the State of Illinois.

That among the historical or architectural features which will be provided protection are as follows:

This building is a Prairie Style Stucco and wood office building, built by Architect Ernest Wood for his own use. Prairie Style characteristics are to be seen in the rectilinear massing of the building, the subdivision of exterior surfaces by flat strips of dark stained wood, the simple geometry of the wooden screens on either side at the front of the building, the front door, the two (2) concrete urns, the stained glass, and the overhanging horizontal edges of the roof. The structure was unlike anything in Quincy at the time with its creme-colored stucco over cypress walls and straightforward reference to Frank Lloyd Wright. The building is known as the Ernest M. Wood Architecture Office and Studio. The building was built in 1911-12, being designed by the architect Ernest Wood; the style is of the Prairie School. The owner at the time of the designation is George M. Irwin.

29.1019 <u>Designation of 3201 North Twelfth Street</u> --- That 3201 North Twelfth Street, Quincy, Illinois, is hereby designated as Landmark.

That the legal description of 3201 North Twelfth Street is as follows:

Part of the Southeast Quarter of Section Twenty-three (23) in Township One (1) South of the Base Line, Range Nine (9) West of the Fourth Principal Meridian, Adams County, Illinois, being more particularly bounded and described as follows, to-wit: Commencing at a point on the East line of said Southeast Quarter at a point Four Hundred

Fifteen and Forty Hundredths (415.40) feet South of the Northeast corner of said Southeast Quarter, thence South along said East line Four Hundred Eighty (480) feet, thence South 89 48' West parallel to the North line of said Southeast Quarter Three Hundred Twenty-two and Twenty Hundredths (322.20) feet, thence North Four Hundred Eighty feet, thence North 89 48' East Three Hundred Twenty-two and Twenty Hundredths (322.20) feet to the point of beginning, containing 3.55 acres, inclusive of and being subject to the right of way of State Route #96, all as shown by the Plat of Survey made by T.J. Berglind, Registered Illinois Land Surveyor, March 1986, and recorded in the Office of the Recorder of Deeds in and for Adams County, Illinois, in Book 14 of Plats at page 629, to which reference is made for greater certainty. Situated in the County of Adams and State of Illinois.

That among the historical or architectural features which will be provided protection are as follows:

This is a large brick two story farmhouse, probably built around 1860, although its Greek Revival features might indicate earlier construction. The facade is marked by a long Italianate style porch, strong curved Italianate front door and sidelights, and pairs of windows. All sections of the house have a handsome and prominent cornice, emphasized with a wide, divided band of trim, discontinuous across the gable ends, an almost universal feature of Greek Revival Houses.

This building is known as the Frank Speckhart Farmhouse, and also as the Charles L. Brown House. The building was build c. 1850's-1860's, the architect/builder is unknown; the style being Italianate with some Greek Revival features. The owner at time of designation is Forrest Ramsey.

29.1020 <u>Designation of 1444 Maine Street</u> - - That 1444 Maine Street, Quincy, Illinois is hereby designated a Landmark.

That the legal description of 1444 Maine Street is as follows:

Lots Fifty-one (51) and Fifty-two (52), in Nevins' Addition to the City of Quincy, situated in the County of Adams, in the State of Illinois.

That among the historical architectural features which will be provided protection are as follows:

The house has unusually large scale double brackets under the soffits along with elaborate dentil molding in one of the most ornate designs to be found. This includes the raised flat elliptical ornament. Unique rope molding surrounds the window frames on the main portion of the house. The West wing of the louse is more austere with non-ornamented lintels, window trimmings, and scaled down bracketing. A curved bay west of the rear entrance, part of the original dining room, is a departure from the ordinary box usually associated with the basic Italianate house. The front porch had 4 sets of double columns and corresponding pilasters. The railing is made up of balusters with a cap top. The frieze of the porch had dentil mouldings and double brackets and is topped with an ornate gallery which is repeated in the roof gallery. The East porch is a smaller version of the main porch with the same detailing, but smaller in size. There is also a lavishly detailed bay window on the east side of the rear entrance. The house has 6 chimneys with detailed caps.

29.1021 <u>Designation of 819 N. Fifth Street</u> --- That 819 N. Fifth Street, Quincy, Illinois is hereby designated a Landmark.

That the legal description of 819 North Fifth Street is as follows:

The North 32 1/2 feet of Lot Two (2) and South 20 feet of Lot Three (3) in Block 28 of Keyes Survey, City of Quincy, Adams County, Illinois.

That among the historical architectural features which will be provided protection are as follows:

The Bradshaw House is an outstanding example of High Victorian eclecticism and a major residential landmark of North Side Quincy. The Bradshaw House was constructed in 1877 on a site neighboring several prominent men of Quincy; the businessman and bank cashier Frederick W. Meyer, the attorney and Circuit Judge William B. Powers, the attorney Jackson Grimshaw, and the attorney and Circuit Judge William Marsh.

Other historical architectural features to be protected are as follows:

(1) Front facade;

(2) Main entrance, overhang, roof, end brackets with carvings;

(3) Front and side porches with porch rails, floors and steps, plus porch paneling (reproduction);

(4) First floor rectangular window and doors, with their sharktoothed limestone hoods with central carvings;

(5) Cornice bracketing;

(6) The gabled ends of all second-story dormers with centralized rosettes;

(7) The four attic dormers, which are differently decorated with wooden stick-style gabled end camouflaging the typical sharktoothed head and rosette behind;

(8) South side bay window;

(9) Quincy Preservation Commission gives permission that the flared-top front chimney (now removed) may be restored to its original design;

(10) Three rear chimneys;

(11) Stone foundation surrounding the house; and

(12) Exterior brick surface of the house.

29.1022 **<u>Designation of 1200 Park Place</u>** --- That 1200 Park Place, Quincy, Illinois is hereby designated a Landmark.

That the legal description of 1200 Park Place is as follows:

The West 55 feet of Lot Sixteen (16) in "Park Place" Anton Binkert's Addition to the City of Quincy, Adams County, Illinois.

That among the historical architectural features which will be provided protection are as follows:

This is a fine example of the Queen Anne architectural style of brick construction, circa 1887-89. It has the Queen Anne steeply pitched roof with dominant front-facing gable, patterned shingles, patterned brick work masonry, and a wrap-around porch extending along two walls, which accentuates the asymmetry of the facade. The architect, John Batschy, born in 1855 in Switzerland, came to Quincy in 1864.

Other significant features of this structure to be protected are as follows:

(1) Round tower with decorative banding and finial;

(2) All patterned shingles on entire structure;

(3) Large round window east of entry, flanked on both sides by small decorative stained glass windows;

(4) Windows facing the front and west sides on the first and second floors which have rectangular smaller windows at the top over the main window. These smaller windows are decorative stained glass;

(5) Front-facing third floor window (Palladian inspired) and its companion west-facing window;

(6) Front porch frieze, porch gable columns, rails and spindles (these features may be returned to their original design);

(7) Decorative work on lintels above six windows;

(8) Exterior brick surface of house including patterned brick on chimneys and sides of house;

(9) Stone foundation with accompanying decorative capping;

(10) Rear porch roof with decorative brackets;

(11) West attic eyebrow window;

(12) Four gable ridge-edge decorative ornaments;

(13) Circular west attic window;

(14) East and west side chimneys, excluding south chimney; and

(15) Front door with decorative stained glass window above.

29.1023 <u>Designation of 415 Jersey Street</u> - - That 415 Jersey Street, Quincy, Illinois is hereby designated a Landmark.

That the legal description of 415 Jersey Street is as follows:

The West Fifty-eight (58) feet of Lot Six (6) in Block Nineteen (19) of the original Town of Quincy situated in Adams County, in the State of Illinois.

That among the historical architectural features which will be provided protection are as follows:

(1) Entire exterior brick surface.

(2) Primary windows, including stone sills and lintels.

(3) Secondary windows, including flat arch brick lintels.

(4) Metal roof with built-in gutters.

(5) All brick chimneys which may be returned to their original 19th-Century appearance.

(6) Double brackets and dentil work on the cornice and triptych windows of the main house.

(7) Single brackets on the porch with Italianate columns and depressed open arches between square columns.

(8) 1/1, or true divided-light 4/4 or 6/6 windows.

(9) Three sided west bay with paired bracket and dentil molding matching house cornice.

(10) 19th-Century carriage house in rear, which is common bond, with simple true divided-light windows.

(11) Recessed access to summer kitchen.

(12) 19th-Century stone steps leading to sidewalk in front yard.

29.1024 <u>Designation of 421 Jersey Street</u> -- That 421 Jersey Street, Quincy, Illinois is hereby designated a Landmark.

That the legal description of 421 Jersey Street is as follows:

All of Lot Seven, in block number Nineteen, in the original town, now City, of Quincy. Known as 421 Jersey Street, in the City of Quincy, situated in the County of Adams, in the State of Illinois.

That among the historical architectural features which will be provided protection are as follows:

(1) All exterior brick work on main block and earlier wing.

(2) All bracketing under the eaves.

(3) South and west porches with wooden floors and steps and ornate wooden columns.

(4) Two-story bay window on east side of main block.

(5) All exterior windows and carved window hoods at the second floor level.

(6) Arched entrance on south porch and surrounding panels of etched and cut glass.

(7) Wooden entrance door on west porch.

29.1025 <u>Designation of 323 College Street</u> -- That 323 College Street, Quincy, Illinois is hereby designated a Landmark.

That the legal description of 323 College Street is as follows:

Lot Seven (7) except the North Forty-five (45) feet of the West Fifty-seven (57) feet thereof, in Block Twenty-two (22) in Willard Keyes Addition to the City of Quincy, situated in the County of Adams, in the State of Illinois.

That among the historical architectural features which will be provided protection are as follows:

(1) Wooden cornice.

(2) Simple hip roof.

(3) Two chimneys.

29.1026 <u>Designation of 331 College Street</u> -- That 331 College Street, Quincy, Illinois is hereby designate a Landmark.

That the legal description of 331 College Street is as follows:

Lot Eight (8) in Block Twenty-two (22) in Willard Keyes Addition to the City of Quincy, situated in the County of Adams, in the State of Illinois.

That among the historical architectural features which will be provided protection are of follows:

(1) Wooden cornice.

(2) Simple hip roof.

(3) Two chimneys.

(4) Windows and sills.

29.1027 <u>Designation of 929 Monroe Street</u> - - That 929 Monroe Street, Quincy, Illinois is hereby designated a Landmark.

That the legal description of 929 Monroe Street is as follows:

A part of Lots Fifteen (15), Sixteen (16), and Seventeen (17), being that part of Lot Fifteen (15) described as the East 14 feet of the North 34 feet and the East 4 feet of the South 50 feet of the North 84 feet; all of Lot 16 except the West 2 feet of the South 104 feet; and all of Lot 17 except the East 1 feet thereof in Block 22 in Berrian's Addition,

subject to the rights of the owners, their heirs and assigns, of the East 11 feet of Lot 17 and all of Lot 18 in Block 22 in Berrian's Addition to the City of Quincy, to use and maintain a line of sewer pipe through the following described real estate to-wit: The East 8 feet of the West 29 feet of the South 104 feet of said Lot 17 for the purpose of conveying sewage from the first above described premises to the sewer in Monroe Street. The bell which is located on said property shall remain the property of the Trinity United Church of Christ, all situated in the County of Adams, in the State of Illinois.

That among the historical architectural features which will be provided protection are as follows:

(1) Wooden slate-covered steeple with decorative railing and four corner spires.
(2) All windows including transom over front entrance doors.
(3) Four louvered openings in bell tower.
(4) All brick exterior, including bell tower, corbeling, and North Annex.
(5) South front entrance doors.
(6) Curving front entrance steps.
(7) Pair of exterior light standards at main entrance on Monroe Street.
(8) Nineteenth century bell in tower.

29.1028 <u>Designation of 1001 North Fifth Street</u> --- That 1001 North Fifth Street, Quincy, Illinois is hereby designated a Landmark.

That the legal description of 1001 North Fifth Street is as follows:

An undivided Forty-three percent (43%) of a part of Lots Number Seven (7) and Eight (8) in Block Number Two (2) in Robert Tillson's Addition to the City of Quincy, in Adams County, and State of Illinois, more particularly bounded and described as follows: Beginning at the Southeast Corner of said Lot Eight (8), running thence North of the West line of Fifth Street, in said City Forty-two (42) feet, thence West on a line parallel with the North line of Chestnut Street in said City, One Hundred and thirty-five (135) feet, thence South on a line parallel with the West line of said Fifth Street Forty-two (42) feet, and thence East along the North line of said Chestnut Street One Hundred and Thirty-five (135) feet to the place of beginning, situated in the County of Adams, in the State of Illinois.

That among the historic architectural features which will be provided protection are as follows:

(1) Semi-circular bay on Southeast corner of building.
(2) Four wooden circular bulls-eye attic windows (set in stone) on south and east sides.
(3) Exterior brick walls on building's four sides.
(4) Tin soffit detailing on south and east sides.
(5) Foundation stone on south side.
(6) Wooden framing surrounding the doors and window on east side set on stone foundation.
(7) Roof with decorative supports over south door.
(8) Second story oriel windows with corbel supports on south and east sides.

29.1029 <u>Designation of 425 South 12th Street</u> --- That 425 South 12th Street, Quincy, Illinois is hereby designate a Landmark.

That the legal description of 425 South 12th Street is as follows:

A part of the Southwest Quarter of Section One in Township Two (2) South of the Base Line, in Range Nine (9) West of the Fourth Principal Meridian in the County of Adams, in the State of Illinois, bounded as follows: Commencing at a point on the North line of State Street in the City of Quincy, in said County, One Hundred and Six Feet East of the intersection of said North line with the East line of Twelfth Street in said City, running thence East, on said North line, One Hundred and Twenty feet, thence North Two Hundred Twenty and One Half feet, more or less, to the first alley, thence West, on the South line of said alley, to a point One Hundred and Forty Feet east of the East line of said Twelfth Street, thence South, on a line parallel with the East line of said Twelfth Street, Seventy-four feet, thence West on a line parallel with the North line Of said State Street to the East line of said Twelfth Street, thence South, on the East line of said Twelfth Street, Thirteen feet more or less to a point One Hundred and Thirty-five feet and six and one half inches North of the intersection of said North line with said East line, thence East, on a line parallel with said North line, Twenty-six feet, thence South-Easterly to a point One Hundred and Ten feet North of said North line and One Hundred Six feet East of said East line and thence South, on a line parallel with said East line to the place of beginning, situated in the County of Adams, in the State of Illinois; and

A part of the Southwest Quarter of Section One in Township Two South of the Base Line, in Range Nine West of the Fourth Principal Meridian in the County of Adams in the State of Illinois, bounded as follows: Commencing at a point on the East line of Twelfth Street in the City of Quincy in said County One Hundred and Forty-eight feet and six and one half inches North of the intersection of said East line with the North line of State Street in said City, running thence East, on a line parallel with said North line, One Hundred and Forty feet, thence North on a line parallel with said East line Seventy-four feet to the first alley, thence West along the South line of said alley, one Hundred and Forty feet to said East line and thence South on said East line, Twenty-four feet to the place of Beginning, situated in the County of Adams, in the State of Illinois.

That among the historical architectural features which will be provided protection are as follows:

(1) Four front Doric columns.
(2) Lower wrap-around porch, railings, banisters and wooden floor and steps.
(3) Second floor front porch, railings and metal floor.
(4) All wooden porch ceilings.
(5) Elliptical front and rear windows.
(6) Front door and decorative transom window.
(7) Four brick chimneys.
(8) All exterior windows and wooden shutters.
(9) All wooden exterior siding.
(10) South alcove with wooden stairs to second floor, railings and banister.
(11) South kitchen porch, wooden floor and steps, railings and banister.
(12) Stone cellar steps and sidewalks.
(13) North side wooden steps and banisters into dining room.
(14) Stone foundation walls.
(15) Brick sidewalks.

29.1030 <u>Designation of 1656 Maine Street</u> - - That 1656 Maine Street, Quincy is hereby designated a Landmark.

That the legal description of 1656 Maine Street is as follows:

That part of Lot Forty-four (44) in Nevin's Addition to the City of Quincy, situated in Adams County, Illinois, described as follows: Commencing at the northeast corner of said lot on the south side of Maine Street, thence West Sixty-seven and One-half (67 1/2) feet on the South line of Maine Street, thence South Two Hundred Fifteen (215) feet, more or less, on a line parallel with the West line of said lot to a point Two Hundred (200) feet North of the North line of Jersey Street as now located, thence East Sixty-seven and One-half (67 1/2) feet on a line parallel with the North line of Jersey Street to the East line of said lot, and thence North Two Hundred Fifteen (215) feet, more or less, on said East line to the place of beginning.

That among the architectural features which will be provided protection are as follows:

(1) All exterior brick of the main dock.

(2) Front entrance porch and connecting west sun porch.

(3) East side chimney.

(4) Leaded and beveled glass in the first floor parlor window and the entrance door transom and reception hall window.

(5) All exterior windows in the mail block of house at first, second, and attic levels.

(6) The pitched roof.

(7) All stone foundation work.

(8) All decorative stone and brick work.

(9) Round brick quoins.

That the historical significance of 1656 Maine Street is as follows:

This house was designed by architect John Batschy and completed in 1896 for Quincy physician, Grant Irwin. The house was later the home of V.G. Musselman, a nationally known ornithologist.

29.1031 <u>Designation of 1477 Maine Street</u> -- That 1477 Maine Street, Quincy, Illinois is hereby designated a Landmark.

That the legal description of 1477 Maine Street is as follows:

A part of Lots Thirty-five (35) and Thirty-six (36) in Nevin's Addition to the City of Quincy, in Adams County, in the State of Illinois, bounded and described as follows: Beginning at the point of intersection of the North line of Maine Street with the West line of Sixteenth Street, in said City, as said streets are now located; thence running West along the North line of said Maine Street One Hundred and Four (104) feet more or less to a point One Hundred and Seventy-five (175) feet East of the West line of said Lot Thirty-five (35); thence North on a line parallel with the West line of said Lot Thirty-five (35) to a point One Hundred and Eighty-five (185) feet South of the South line of Hampshire Street in said City; thence East on a line parallel with the North line of said Maine Street to the West line of said Sixteenth Street; and thence South along the West line of said Sixteenth Street Two Hundred and Fifteen (215) feet more or less to the place of beginning, situated in the County of Adams and State of Illinois, and commonly known as 1477 Maine Street, Quincy, Illinois.

That among the architectural features of the house which will be provided protection are as follows:

(1) All exterior brick.

(2) All exterior windows.

(3) Front and rear porches including wooden columns, wooden rails, wooden floors and steps, and tin roof.

(4) Straight-flared mansard roof.

(5) Roof-top cupola.

(6) Three east-side balconettes including tin floors, decorative balustrades and bracketing.

(7) Three brick chimneys.

(8) Wrought iron fencing on east and west sides of property.

That among the architectural features of the carriage house which will be provided protection are as follows:

(1) All exterior brick.

(2) Arch design over lower car entrance.

(3) Hay door over lower door.

That the historical significance of 1477 Maine Street is as follows:

This house and its adjacent carriage house were built in 1866 for David W. Miller, a Quincy businessman who owned and managed several local hotels.

20.1032 <u>Designation of 1627 Maine Street</u>-- That 1627 Maine Street, Quincy, Illinois is hereby designated a Landmark.

That the legal description of 1627 Maine Street is as follows:

Part of Lot Thirty-eight (38) in Nevin's Addition to the City of Quincy, Illinois, bounded and described as follows: Commencing at a point on the south line of Lot Thirty-eight (38), Sixty-eight (68) feet East of the Southwest corner of said Lot, thence running East on the South line of said Lot, Forty-eight (48) feet, thence North on a line parallel with the West line of said Lot Two Hundred Thirty-six (236) feet, more or less to a point which is One Hundred Sixty (160) feet south of the North line of said Lot, thence West forty-eight (48) feet and thence South on a line parallel with the West line of said Lot to the place of beginning, situated in the County of Adams, in the State of Illinois.

That among the architectural features which will be provided protection are as follows:

(1) All exterior stone walls.

(2) Decorative fan shaped lintel over center front window.

(3) All wooden siding on upper floor.

(4) Entrance porch with decorative iron railing and arched stone entrance.

(5) Curved stone steps to entrance porch.

(6) Parade porch with decorative iron railing.

(7) Stone chimneys.

(8) Wooden-clad bay above parade porch.

(9) Decorative ridge trim.

(10) Exterior windows with rounded glass.

That the historical significance of 1627 Maine Street is as follows:

This two-story house was built about 1895 for Quincy industrialist, Edward A. Rogers, an entrepreneur engaged in wagon-making, coal-selling, and real estate development.

29.1033 **<u>Designation of 333 East Avenue</u>** --- That 333 East Avenue, Quincy, Illinois is hereby designated a Landmark.

That the legal description of 333 East Avenue is as follows:

That part of Lots One (1) and Two (2) in Block Seven (7) in Lawndale Addition to the City of Quincy, situated in the City of Quincy, in the County of Adams and State of Illinois, which is more particularly bounded and described as follows to-wit: Commencing at a point on the East line of said Lot One (1) Which is One Hundred Ten (110) feet South of the Northeast corner of said Lot One (1) thence running West parallel to the North line of said Lot One (1) for a distance of One Hundred (100) feet, more or less, to the East line of East Avenue as now located in said City of Quincy, being the West line of said Lot One (1), running thence South or Southwesterly on the Easterly line of said East Avenue a distance of Fifty-eight (58) feet measured on the curve of said East Avenue, thence running Southeasterly in a direct line to a point on the East line of Lot Two (2) which is Two Hundred Forty (240) feet South of the Northeast corner of said Lot One (1) and thence running North on the East line of said Lots One (1) and Two (2) to the place of beginning; and also a part of said Lot One (1) in Block Seven (7) of Lawndale Addition more particularly bounded and described as follows: Beginning at a point which is Forty-two and Forty-eight Hundredths (42.48) feet West of a point which is One Hundred Ten (110) feet South of the Northeast corner of Lot One (1) of said Block Seven (7) and running thence West on a line parallel with the North line of said Lot One (1) a distance of Fifty-eight and Thirty-Hundredths (58.30) feet to the East line of East Avenue in said Addition, thence running North along the East line of said East Avenue (along the curve thereof) a distance of Four (4) feet, thence East Forty-seven and Fifty Hundredths (47.50) feet to a point Ten and Five Tenths (10.5) feet West and Four and Eighteen Hundredths (4.18) feet North of the above described place of beginning, thence in a Southeasterly direction Eleven and Forty Hundredths (11.40) feet to the place of beginning, containing .00547ths of an acre being that part of said real estate heretofore used as a driveway; and also that part of the vacated alley lying East of Lot Two (2) in Block Seven (7) in Lawndale addition to the City of Quincy, bounded and described as follows: Commencing at a point on the East line of said Lot Two (2), which is Eight (8) feet South of the Southwest corner of Lot Four (4) in Block Five (5) in Lawrence & Flach's Addition to the City of Quincy, thence running South along the East line of said Lot Two (2) Forty-two (42) feet, more or less, to a point which is Two Hundred Forty (240) feet South of the Northeast corner of Lot One (1) in Block Seven in said Lawndale Addition, thence East Four (4) feet to the center line of said vacated alley, thence North along said center line of said vacated alley Forty-two (42) feet more or less to a point which is Eight (8) feet South of the South line of said Lot Four (4) and thence West Four (4) feet to the place of beginning.

That among the architectural features which will be provided protection are as follows:

(1) All exterior brick.
(2) Stucco frieze under eaves.
(3) Exterior stone trim.
(4) Stone foundation and front steps.
(5) Entrance porch columns and light fixtures.
(6) Exterior windows and stone sills.
(7) Rear porch vertical wooden porch shield.
(8) Center brick chimney with decorative grill.

(9) Massive hip roof.

(10) Heavy eave bracketing.

(11) Front house-length porch.

That the historical significance of 333 East Avenue is as follows:

This house was designed by Quincy architect, George P. Behrensmeyer, as his personal residence. Behrensmeyer was one of this city's best recognized architects, having designed the WCU Building, Quincy Junior High School, Central Fire Station, and numerous other public and private structures.

29.1034 <u>Designation of 1401 Maine Street</u> --- That 1401 Maine Street, Quincy, Illinois is hereby designated a Landmark.

That the legal description of 1401 Maine Street is as follows:

Parts of Lots Thirty-one (31) and Thirty-two (32) in Nevin's Addition to the City of Quincy, in the County of Adams and State of Illinois, bounded as follows, viz: Commencing at a point of intersection of the North line of Maine Street with the East line of Fourteenth Street in said City, thence running East with said North line of Maine Street One Hundred (100) feet, thence North on a line parallel with the East line of said Fourteenth Street to a point equidistant between the North line of Maine Street and the South line of Hampshire Street in said City, thence West One Hundred (100) feet to the East line of said Fourteenth Street, and thence South with said East line to the place of beginning.

That among the architectural features which will be provided protection are as follows:

(1) Construction of red brick rising two-stories to a wooden cornice and a sloped straight-lined mansard styled roof.

(2) Elaborate cornice with paired brackets and dogged-tooth ornamentation.

(3) A wraparound Queen Anne porch with porte-cochere on the east side. Architectural features listed as part of the porch are: all ornamental capitals, wooden columns, wooden balustrades, wooden steps, pediment over entrance steps, and wooden skirt.

(4) West two-story bay windows topped with sloped roof and wrought iron railing.

(5) Two bay windows on the east.

(6) Pierced vergeboard on west gable.

(7) Front exterior doors and all exterior windows topped with stone ornamental hoods.

(8) Leaded and beveled glass in windows and doors including bottled glass in transom east stairway bay.

(9) Existing brick walks surrounding house and brick walks on Maine and Fourteenth Street.

That the historical significance of 1401 Maine Street is as follows:

This large and imposing two-story red brick house dominates the northeast corner of Fourteenth and Maine Streets. It was built in 1875-1876 for Henry C. Dickhut, a Quincy businessman who made his fortune in the lumber as part-owner and superintendent/manager of Quincy Lumber Company and the Gem City Saw Mill.

29.1035 <u>Designation of 317 College Street</u> -- - That 317 College Street, Quincy, Illinois is hereby designated a Landmark.

That the legal description of 317 College Street is as follows:

All of Lot Six (6) in Block Twenty-two (22) in Willard Keyes' Addition to the City of Quincy, situated in the County of Adams, in the State of Illinois.

That among the architectural features which will be provided protection are as follows:

(1) The Poetsch House is constructed of red brick and rises two full stories with the attic becoming a third full story, all resting on a stone foundation.

(2) A one-story bay on the west and a two-story bay on the east.

(3) An entrance porch with single brackets on the soffit.

(4) A tower room with an engaged turret roof is built into the roof and main body of the second story facing south; a door leads from a circular room in the tower onto a porch that gives a breathtaking view of Quincy, the river and the bridges.

(5) A high-pitched roof.

(6) A double-tiered west gable with brackets and a half-round window.

(7) Typically rectangular windows with stone sills.

(8) Six original stained glass windows on the front (facing south and west).

That the historical significance of 317 College Street is as follows:

Gustav and Mary Poetsh built this large Queen Anne-style house in 1894-95; this house and two adjoining houses at 323 and 331 College all sit on top of a hill with a beautiful view overlooking Quincy and the Mississippi River.

29.1036 <u>Designation of 2203 Maine Street</u> -- That 2203 Maine Street, Quincy, Illinois is hereby designated a Landmark.

That the legal description of 2203 Maine Street is as follows:

The East Nineteen (19) feet of Lot Fourteen (14) and the West Forty-three and One-half (43 1/2) feet of Lot Fifteen (15), all in Block Four (4) in C. H. Morton's Addition to the City of Quincy situated in the County of Adams, in the State of Illinois.

That among the architectural features which will be provided protection are as follows:

(1) Bull-nose brick exterior.

(2) Front terra cotta stone and stone inserts on east.

(3) Four porches including wooden floors, railings, columns, and trim.

(4) West side tower with three foot topper finial.

(5) Stone foundation surrounding house.

(6) Gable detailing on south and east sides.

(7) Four brick chimneys.

(8) Stone side walls and front steps.

(9) Wooden front double door.

(10) Decorative pink stone between house and foundation.

That the historical significance of 2203 Maine Street is as follows:

Designed by architect, John Batsch, this house was built in 1888 for DeLafayette Musselman, founder of Gem City Business College.

29.1037 <u>Designation of 613 Broadway Street</u> --- That 613 Broadway Street, Quincy, Illinois is hereby designated a Landmark.

That the legal description of 613 Broadway is as follows:

That part of Lot Three (3), in Block Fourteen of Pease's Addition to the City of Quincy, situated in the County of Adams, in the State of Illinois, which is more particularly bounded and described as follows: Beginning at a point on the South line of said Lot Three (3) which is One Hundred Forty-eight (148) feet and Three (3) inches East of the Southwest corner of Lot One (1) of said Block Fourteen (14) in said Pease's Addition, running thence East along the South line of said Lot Three (3) to the Northeast corner of said Lot Three (3) to a point which is One Hundred Forty-eight (148) feet and Three (3) inches East of the Northwest corner of said Lot One (1), thence running South parallel to the West line of said Lot One (1) to the place of beginning;

Also, that part of the South half of Block Six (6) in Willard Keyes' Addition to said City of Quincy which is more particularly bounded and described as follows: Beginning at the Southwest corner of said Block Six (6), thence running North along the West line of said Block Six (6) for a distance of One Hundred Ninety (190) feet to the Northwest corner of said South half of said Block Six (6) and to an alley which runs East and West through the center of said Block Six (6), thence running East on the South line of said alley for a distance of Forty-nine and Thirty-three Hundredths (49.33) feet, thence running South on a straight line to the South line of said Block Six (6) to a point on said South line of Block Six (6) Fifty and Sixty-seven Hundredths (50.67) feet East of the point of beginning, thence West along the South line of said Block Six (6) Fifty and Sixty-seven Hundredths (50.67) feel to the point of beginning;

Also, a parcel about Twenty-six (26) feet in width lying between the North side of Broadway Street as formerly located in Quincy, Illinois, and immediately South of the above described part of Lot Three (3) of said Block Fourteen (14) in said Pease's Addition and immediately South of the above described part of Block Six (6) of said Keyes' Addition, said described tract of about Twenty-six (26) feet being formerly included in said Broadway Street but said Broadway Street to that extent, having been heretofore vacated and said City of Quincy having heretofore conveyed said last described real estate to the owners of lots adjoining same on the North, and said real estate being more particularly bounded and described as follows: Commencing at a point on the south line of said Lot Three (3) in Block Fourteen (14) of Pease's Addition to the City of Quincy, Adams County, Illinois, said point being Fourteen and Ninety-eight Hundredths (14.98) feet West of the Southeast corner of said Lot Three (3), running thence South Twenty-six (26) feet, more or less, to the North line of Broadway Street where the same is now located, running thence East Fourteen and Ninety-eight Hundredths (14.98) feet along the North line of said Broadway Street, running thence North Twenty-six (26) feet, more or less, to the Southeast corner of said Lot Three (3), running thence West along the South line of said Lot Three (3) Fourteen and Ninety-eight Hundredths (14.98) feet, more or less, to the point of beginning, containing .009 acres, more or less; also, commencing at the Southwest corner of Block Six (6) in Willard Keyes' Addition to the City of Quincy, running thence East along the South line of said Block Six (6) Fifty and Sixty-seven Hundredths (50.67) feet, running thence South Twenty-six (26) feet, more or less, to the North line of Broadway Street as the same is now located, running thence West along the North line of said Broadway Street Fifty and Sixty-seven Hundredths (50.67) feet, running thence North Twenty-six (26) feet, more or less, to the point of beginning, containing .03 acres, more or less, all situated in the City of Quincy, County of Adams, and State of Illinois.

That among the architectural features which will be provided protection are as follows:

(1) All exterior brick.
(2) Carved stone entrance steps with cast iron rails and brass ball finials.
(3) Carved entrance steps.
(4) "Parade" porch to the west of the entrance with all wooden columns, rails and porch skirting lattice.
(5) All exterior windows.
(6) Stone lintels on the south facade windows.
(7) Mansard roof with round bulls-eye windows.
(8) Iron-railed windows walk with brass finials.
(9) Bay window to the east of entrance tower.
(10) Eave Banding and decorative quoin caps.

That the historical significance of 613 Broadway Street is as follows:

This brick house was built in 1873 for Robert W. Gardner, inventor of the governor used in steam locomotives and founder of the Gardner Governor Company.

29.1038 **Designation of 1020 Kentucky Street** --- That 1020 Kentucky Street, Quincy, Illinois is hereby designated a Landmark.

That the legal description of 1020 Kentucky Street is as follows:

The West one half of Lot 4, all of Lots 5 and 6, and the East 3 feet of Lot 7, all in Block 69 in John Wood's Addition to the City of Quincy, Adams County, in the State of Illinois.

That the Historical name of the house is the August (Manny) Dick House.

That the Style of the house is Craftsman Prairie.

That the date of construction is 1917.

That the Architect or Builder was George Behrensmeyer.

That among the architectural features which will be provided protection are as follows:

(1) All exterior brick (tapestry bond) and stone.
(2) Corner piers with stone caps.
(3) All windows with stone sills.
(4) Narrow wooden strips decorating the undersides of eaves.
(5) Wide eaves with brackets.
(6) Four gutter drain pipes curving artfully around eaves and sides of structure.
(7) Small square stone ornament applied to corner piers.
(8) Central brick chimney.
(9) Original gently sloping gable roof line.
(10) Garage at back of property with tile trim at roof line.

That the historical significance of 1020 Kentucky Street is as follows:

This house was built for August Dick, son of one of the three founders of the Dick Brothers Brewing Company. The brewery buildings are located a block away from Mr. Dick's house.

29.1039 **Designation of 332 Elm Street** --- That 332 Elm Street, Quincy, Illinois is hereby designated a Landmark.

That the legal description of 332 Elm Street is as follows:

Beginning at the Southwest corner of Fourth Street and Elm Street, proceed West 97 feet, South 141.5 feet, West 44 feet, East 20 feet, North 35 feet, East 121 feet, North 151.5 feet. Includes parts of Lots 1 and 2 in Block 22 in the Keyes Survey of the City of Quincy, Adams County, in the State of Illinois.

That the Historical Name of the house is the William Cramer House.

That the Style of the house is Italianate.

That the date of construction is 1868.

That the Architect or Builder is Unknown .

That among the architectural features which will be provided protection are as follows:

(1) All exterior brick.

(2) Original north porch with shouldered square columns joined by elliptical arches (6 free standing and 2 attached columns).

(3) Arched entrance with rounded transom and sidelights.

(4) Decorative (wave pattern) brackets at top of porch columns.

(5) Decorative (scallop pattern) panels at base of porch.

(6) All rectangular windows with stone lintels and sills.

(7) North side first floor window extend to floor (4 windows).

(8) Wide eaves with 16 sets of double brackets around cornice of main structure.

(9) 10 frieze windows around main structure.

(10) Shallow hip roof.

(11) 2 split corbel chimneys, one at east end, one at west end.

(12) Stone belt course at foundation matching window sills and lintels.

(13) Rusticated stone foundation.

(14) Brick sidewalk on Elm Street.

(15) East side porch with 7 square wooden columns with shoulder brackets.

That the historical significance of 332 Elm Street is as follows:

Cramer went into business with John Henry Brockschmidt and his son, H.J. B. Brockschmidt; the three men became proprietors of the Cedar Creek Distiller, located on North Front Street, near the City limits.

29.1040 <u>Designation of 238 South 12th Street</u> --- That 238 South 12th Street, Quincy, Illinois is hereby designated a Landmark.

That the legal description of 238 South 12th Street is as follows:

Lot 1 and the South 2 feet of Lot 2 in Block 1 of the Stedman Nash Plat B in the City of Quincy, Adams County, in the State of Illinois.

That the Historical Name of the house is the Ezra and Florence Best House.

That the Style of the house is Romanesque/Queen Anne.

That the Date of construction is 1889.

That the Architect or Builder is John Batschy.

That among the architectural features which will be provided protection are as follows:

(1) All exterior stone and brick.

(2) Double door entrance with decorative glass transom above.

(3) Original east-side porch (three bays wide) with 4 free standing columns and feather pattern shoulder detailing.

(4) Pediment on east porch above the front steps with carved detail matching that in the half-gable created at the north and south ends of the porch where the roof attaches to the stone wall.

(5) Square stick style porch balustrade with detailed top rail.

(6) Elaborate stone and brick string course between first and second stories on southeast tower.

(7) Stone string course above foundation.

(8) All windows with stone sills and windows.

(9) Large window to north of front door on east side featuring decorative glass.

(10) Second story large tripart arch window with art glass and stone arch above.

(11) Rounded horseshoe arch window (keyhole) on second story has a stone arch above and is entirely of art glass.

(12) All windows in the brick facades (north, south and west) with stone sills and brick relieving arch lintels.

(13) Large window with decorative brick work at north side stairwell.

(14) South side rectangular bay window pier (west of chimney column) featuring brick work, curved cut stone piers, and a tripart arched window at the third level with stone arched lintels and stone sills.

(15) Three different cornice treatments at the roof level of the east facade, which, beginning from the southeast tower include:

(a) Dentils with narrow stone trim on south tower.

(b) Wood Greek Revival panels at center.

(c) Decorative stone cornice under the roof gable.

(16) South, west, and north cornices having Greek Revival cornice.

(17) Black tin roof.

(18) Three story tower at southeast corner having curved bell roof and finial.

(19) East roof pediment with a pair of square windows with Stick Style mullions two types of wood accents: shingle and vertical stick.

(20) South side roof gable with shingles in pediment.

(21) Chimneys (3) with corbel detailing.

(22) Back porch with square columns and Stick Style balustrade.

That the historical significance of 238 South 12th Street is as follows:

Mr. Best was president of E. Best Plumbing & Steam Heating Company which he founded in 1879.

29.1041 **<u>Designation of 1224 Park Place</u>** --- The 1224 Park Place, Quincy, Illinois is hereby designated as a Landmark.

That the legal description of 1224 Park Place is as follows:

Lot 20 and the West one-half of Lot 21 in Park Place, Anton Binkert's Addition to the City of Quincy, Adams County, Illinois, being part of the subdivision of part of the West one-half of Section 1, Township 2 South, Range 9 West of the Fourth Principal Meridian, all situated in the County of Adams, in the State of Illinois.

That the Historical Name of the house is the August R. Dorkenwald House.

That the Style of the house is Eclectic.

That the Date of construction is 1897.

That the Architect or Builder is Unknown.

That among the architectural features which will be provided protection are as follows:

(1) All brick exterior.

(2) Double door entrance with transom.

(3) Stone-based north porch with Greek Revival columns (2 full and 2 attached).

(4) Wide eaves.

(5) Upper section of large north window with decorative art glass.

(6) High foundation marked by rusticated rectangular stone blocks and finished with the course of carved stone.

(7) Lathe-turned wooden balustrade on north porch.

(8) Molded brick decoration over the large north window.

(9) Stone sills and brick lintels of all north side windows.

(10) Molded brick belt course between first and second stories.

(11) Brick work and string course outlining two window groupings on the second level (north side), a group of three at left, a group of two at right.

(12) Windows at east, south, and west sides with the stone sills and brick relieving arch lintels.

(13) Upper sections of double hung windows featuring decorative mullions.

(14) Arched art glass window on center of chimney column in east side projecting bay.

(15) Ornate arch with keystone over a pair of double hung windows containing artistic mullions at the west stairwell. This arch surrounds a carved wooden panel.

(16) Shallow hip roof.

(17) Two stone chimneys with applied decoration.

(18) Cut glass arched window at the south end of the east side first floor.

That the historical significance of 1224 Park Place is as follows:

This two-story brick residence is an elaborate example of the Cube House, a common house type at the turn of the century and one generally associated with the Middle West and the Northeast regions of the United States. The house was built for August Dorkenwald, president of Dick Brothers Brewing Company.

29.1042 **Designation of 319 Spruce** --- That 319 Spruce, Quincy, Illinois is hereby designated a Landmark.

That the legal description of 319 Spruce is as follows:

The West 38 feet of Lots 13, 14, 15 and 16 (except the North 15 feet of Lot 13) in Block 8 of F.C. Moore's Addition to the City of Quincy, Adams County, in the State of Illinois.

That the Historical Name of the house is the R. M. Walter & Maggie Heiderich House.

That the Style of the house is Hipped Bungalow.

That the Date of Construction is 1908.

That the Architect or Builder is Unknown.

That among the architectural features which will be provided protection are as follows:

(1) All exterior stone.

(2) Entrance having transom, partial sidelights, and door of beveled glass.

(3) Three Greek Revival columns (with cornice) on south porch resting on stone bases.

(4) Porch with lathe-turned balustrade.

(5) Wooden bay window on east side with recessed wooden panel below.

(6) Stone chimney on west side.

(7) Steep pitch hip roof.

(8) Three roof gables, those at the south and east sides having broken pediments (excluding present siding).

(9) Rectangular foundation stones.

(10) All stone sills on windows.

(11) Large plate glass window at first floor on south side.

(12) Colored textured glass (with purple-tint floral motif) in east entrance door and west bathroom window.

That the historical significance of 319 Spruce is as follows:

This unique turn-of-the century bungalow was built of locally quarried and individually hand-cut "Quincy Bed" stone. The land on which the house now stands was once owned by Martin and Gertrude Heiderich who bought the parcel in 1889. Martin was one of the organizers of the State Street Bank and president of Collin's Plow Company which conducted business throughout the country, as well as in Argentina. By 1920, portions of the land had been sold. The bungalow was built circa 1908 by Mr. & Mrs. R. M. Walter Heiderich, Martin's son and daughter-in-law. R. M. Walter worked as a bookkeeper and was later affiliated with Gem City Cleaners.

29.1043 <u>Designation of 734 North 4th Street</u> --- That 734 North 4th Street, Quincy, Illinois is hereby designate a Landmark.

That the legal description of 734 North 4th Street is as follows:

That West 124 feet of Lot 5 in Block 21 of the Keyes Survey of the City of Quincy, Adams County, in the State of Illinois.

That the Historical Name of the house is the Dr. Hebern Claflin House.

That the Style of the house is Italianate.

That the Date of construction is circa 1866.

That the Architect or Builder is Unknown.

That among the architectural features which will be provided protection are as follows:

(1) All exterior brick.

(2) Arched entrance with arched transom and wooden keystone, and a carved wooden panel behind the transom glass.

(3) Original west front porch wraps around north side of structure (excluding added closet area, including balustrade and paneled ceiling).

(4) Square columns (5 free standing and 2 attached) with wave pattern brackets forming elliptical arches.

(5) All rectangular windows with stone lintels and sills.

(6) Four first floor windows extending to floor (2 on west side and 2 on south side).

(7) Wide eaves have double brackets at west side, single brackets around other sides. Brackets at cornice along the north, east and south sides are irregularly spaced. At times they are doubles and at other times, singles.

(8) Nine frieze windows.

(9) Two star decoratives as west frieze level between windows.

(10) North porch having columns (3 free standing, 2 attached, connected by elliptical arches).

(11) Shallow hip roof.

(12) West entrance stone steps with engraved address stone.

(13) The brick sidewalks along Fourth Street and to the northeast of the house.

The historical significance of 734 North 4th Street is as follows:

Dr. Claflin, a cancer and consumptive physician, lived in the house only until 1869.

29.1044 **Designation of 1680 Maine Street** --- That 1680 Maine Street, Quincy, Illinois is hereby designated a Landmark.

That the legal description of 1680 Maine Street is as follows:

The North 212.5 feet of Lot 42 and the North 212.5 feet of the East 13 feet of Lot 43, all in the Nevins Survey of the City of Quincy, in the State of Illinois.

That the Historical Name of the house is the Colonel Edward and Virginia Prince House.

That the Style of the house is Queen Anne/Tudor.

That the Date of construction is 1889/1920's.

That the Architect or Builder is attributed to Harvey Chatten, 1889.

That among the architectural features which will be provided protection are as follows:

(1) All exterior stone.

(2) All exposed beams in the half-timbered construction.

(3) All brick chimneys.

(4) Stone porch to the north with four massive stone pillars and wide eaves, wrapping to the west and extending to a porte-cochere which has two large Egyptian pillars at either side of a stone staircase, and two stone pillars with buttresses rising from the ground. Other elements of this porch include:

(a) Decorative iron grills set into the walls of the porch to allow ventilation;

(b) A double door entrance into the house with divided transom;

(c) Pair of French doors leading onto porch at the east end.

(5) Large north gable having exposed timbering, a pair of casement windows, brackets along the cornice line, and fronted by a "balcony".

(6) Smaller north side gable with two double hung windows.

(7) Rounded tower element rising two floors at the northeast corner.

(8) A stone southeast porch having four stone pillars, wide wooden eaves, stone steps with massings at either side, three iron ventilation grills, and a door leading into the house.

(9) Two-story bay element at the east side with a "balcony" above.

(10) Pair of small casement windows in the larger east side gable.

(11) South side roof gable with a pair of double-hung windows and a section of the cornice and brackets closing it.

(12) Stone porch at the Southwest corner with four stone pillars, wide eaves, and an enclosed sun porch at the second level with narrow casement windows.

(13) All window configurations as follows:

(a) All first story windows with stone sills;

(b) All first and second story windows being of the 30-over-1 style;

(c) First story stone bay (within the north side porch) having three double-hung windows;

(d) Two small casement windows in the north side gable.

(14) Multi-gabled carriage house at the south end of the property with:

(a) Various shingle and panel patterns on all four sides;

(b) A large east gable with two large "haydoors" at the center;

(c) Two symmetrically placed dormers at the east side with triangular windows;

(d) A stick-style decorative truss at the top of the large east side gable.

(15) Stone bench in the south yard.

(16) Brick sidewalks and walkways to the north and east of the house.

(17) Brick/cobblestone driveway arching property to the west and south.

That the historical significance of 1680 Maine Street is as follows:

Edward Prince, a native New Yorker and a Union veteran of the Civil War, worked in Quincy as a lawyer and civil engineer. He founded the Quincy Water Works with William and Lorenzo Bull.

This house, built in 1889 as an exuberant Queen Anne, was altered in the 1920's to its current style.

29.1045 <u>Designation of 1469 Maine Street</u> -- That 1469 Maine Street, Quincy, Illinois is hereby designated a Landmark.

That the legal description of 1469 Maine Street is as follows:

A part of Lot Thirty-five (35) in Nevin's Addition to the City of Quincy, bounded as follows: Commencing at a point on the North line of Maine Street in said City, Ninety-five (95) feet East of the Southwest corner of said Lot Thirty-five (35), thence East Eighty (80) feet, thence North Two Hundred Fifteen (215) feet, thence West Eighty (80) feet and thence South Two Hundred Fifteen (215) feet to the place of beginning, together with and subject to an easement for common private driveway owned with the owner of the property adjoining said real estate on the West, all situated in Adams County, Illinois.

That the Historical Name of the house is the Mathias and Ada Huffman House.

That the Style of the house is Second Empire.

That the Date of construction is circa 1880.

That the Architect or Builder is attributed to J.S. Mckean.

That among the architectural features which will be provided protection are as follows:

(1) All brick exterior.

(2) Hand-cut Cyclopean stone foundation, topped by beveled smooth cap.

(3) Wooden front steps.

(4) Double door front entry with framework and original single pane glass transom.

(5) Front porch with two full and two engaged columns resting on rosette-adorned square bases, topped by square, ornately carved capitals, and with carved cornice and brackets.

(6) Two-story angular bays on south and east facade with ornamental lintels.

(7) Small west porch with square pillars, carved cornice and brackets, and atopped by a concave/flat tin roof.

(8) Solarium on west facade with seven full length windows separated by carved wooden trim. The three west windows are separated by engaged pillars, all topped by a convex/flat tin roof.

(9) All second floor windows with deep carvings on lintels.

(10) A convex mansard roof of decorative slates with cast curbs and ornamental cresting and finials.

(11) Intricately carved third floor dormers with Roman columns.

(12) Roof has frieze with deeply carved brackets.

(13) Small porch at north end of east facade.

(14) All brick walks on property.

That the historical significance of 1469 Maine Street is as follows:

Built as a gift for his bride, Ada, by Quincy jeweler, Mathias Huffman, this house has served not only as a private residence, but also as a preparatory school for young women at the turn of the century.

29.1046 <u>Designation of 437 North 9th Street</u> --- That 437 North 9th Street, Quincy, Illinois is hereby designated a Landmark.

That the legal description of 437 North 9th Street is as follows:

That part of Block Four (4) in Willard Keyes' Addition to the City of Quincy, Adams County, Illinois, described as follows: Commencing at the Northeast corner of said Block Four (4), thence West Eighty-eight (88) feet on the North line of said block, thence South Forty-four (44) feet, thence North Forty-four (44) feet along said West line to the place of beginning.

That the Historical Name of the house is the Albert and Amelia Evers House.

That the Style of the house is Queen Anne.

That the Date of construction is circa 1889.

That the Architect or Builder is Frank Tubbesing.

That among the architectural features which will be provided protection are as follows:

(1) All brick exterior with black mortar.

(2) Cut stone foundation with diagonal lattice under porch.

(3) Hip roof with cornice dentil moulding and built-in gutters.

(4) Shingled dormers on all sides; east dormer is bayed.

(5) Porch with square fluted wooden columns and wooden rail.

(6) Small back stoop with wooden awning-shaped roof.

(7) Original oak front door with dentil trim and leaded glass transom.

(8) Arched leaded glass window on the east side.

(9) Round window on north side above porch.

(10) All exterior windows; two on the north side have leaded glass transoms.

(11) Two chimneys with ornamental brickwork and flared tops.

That the historical significance of 437 North 9th Street is as follows:

This house was built about 1898 for Albert Evers, a businessman and partner in Evers Produce Company (which later became Gem City Produce Company).

29.1047 <u>Designation of 2210 Aldo Boulevard</u> --- That 2210 Aldo Boulevard, Quincy, Illinois is hereby designated a Landmark.

That the legal description of 2210 Aldo Boulevard is as follows:

Lots Number Five (5) and Six (6) and the East Twenty-six (26) feet of Lot Number Seven (7), in Block Number Five (5) of Aldo Park Addition to the City of Quincy, situate in the County of Adams, in the State of Illinois.

That the Historical Name of the house is the Clarence and Octavia Gerdes House.

That the Style of the house is Art Moderne.

That the Date of construction is 1939.

That the Architect or Builder is Charles Behrensmeyer.

That among the architectural features which will be provided protection are as follows:

(1) Stucco exterior finish over steel frame construction.

(2) Original steel frame casement windows, both square and rectangular.

(3) Original front door with glass block surround.

(4) One-half arched overhang over entrance.

(5) Narrow/slim steel coping on exterior roof lines, porch lines and sills on all steel casement windows.

(6) Double row of glass blocks lighting garage.

(7) Original tile front porch.

(8) Original upper and lower porches on south side.

That the historical significance of 2210 Aldo Boulevard is as follows:

This structure, built entirely of steel and concrete, is one of only two landmark Art Moderne residences in Quincy. Clarence Gerdes and Charles Behrensmeyer were first cousins and planned to build a steel house. Gerdes was the engineer and Behrensmeyer was the architect.

29.1048 <u>Designation of 300 South 18th Street</u> --- That 300 South 18th Street, Quincy, Illinois is hereby designated a Landmark.

That the legal description of 300 South 8th Street is as follows:

Lots One (1), Two (2) and the North Thirty and one-half (30 1/2) feet of Lot Three (3), all in Block One (1) in J.E. Furness Addition to the City of Quincy, situated in the County of Adams, in the State of Illinois, together with the right at all times, for the purpose of ingress and egress, to the use of a strip of ground Twenty (20) feet wide running North and South Two Hundred Five and One-half (205 1/2) feet, and abutting on the West side of the real estate described herein.

That the Historical Name of the house is the George and Marie Stahl House.

That the Style of the house is Queen Anne.

That the Date of construction is 1895.

That the Architect or Builder is Harvey Chatten.

That among the architectural features which will be provided protection are as follows:

(1) Clapboard exterior walls.

(2) Hand-cut, rusticated stone foundation with grid pattern.

(3) Connecting stone porch column bases; south side has stone foundation bumper guards.

(4) Wooden front steps.

(5) Wraparound porch with recessed entry way, and:

(a) Wooden railing

(b) Lathe-turned spindles

(c) Ionic columns

(d) Porte-cochere

(6) Original wooden entry way with art glass side lights and fan light.

(7) Large single-pane window with art glass transom and wooden lintel.

(8) Two-level cylindrical tower at northeast corner with conical roof and finial cap.

(a) Tower is banded by roofline frieze of figures and swag sculpture.

(b) Tower houses five convex glass windows with wooden lintels and framework.

(9) Ground level entry on north side set within stone.

(10) Wooden northwest corner porch with:

(a) Wooden railing

(b) Lathe-turned spindles

(c) Ionic columns.

(11) Angular bay on north side with three windows and metallic capping.

(12) Balcony above main entry with wooden railing and lathe-turned spindles.

(13) Rounded bay on south side containing screened in third level porch with wooden railing and lathe-turned spindles.

(14) Tri-part windows at landing level with ironic pilasters, dentil molded cornice.

(a) Center panel is topped by semi-circular transom.

(b) Window is fronted by a wooden balconette with lathe-turned spindles and is supported by acanthus leaf brackets

(15) Two leaded glass oval windows on north facade.

(16) All other exterior windows.

(17) Three paneled brick chimneys.

(18) Kitchen porch at southwest corer with square columns lathe-turned spindles, and adjacent water pump.

(19) All brick walks and driveways included on property.

That the historical significance of 300 South 18th Street is as follows:

George Stahl, born in 1864, worked with his father and brother in the wholesale business. He later achieved great financial success with his invention in 1886 of a low-priced poultry hatcher and incubator.

29.1049 (Removed 935 Payson Ave.)

29.1050 **<u>Designation of the South Eighth Street Bridge</u>** --- That the South Eighth Street Bridge, Quincy, Illinois is hereby designated a Landmark.

That the legal description of the South Eighth Street Bridge is as follows:

The Stone Arch bridge is located on South 8th Street over Curtis Creek, in the Northeast Quarter of Section 25, Township 1 South, Range 9 West of the Fourth Principal Meridian. Quincy, Adams County, Illinois and being more fully described as follows: Commencing at a point where the north line of the Southwest Quarter of the Southeast Quarter of Section 11 intersects the west right-of-way line of South 8th Street, thence

continuing North along the west right-of-way line of South 8th Street, one hundred and nine (109) feet to the true point of beginning; thence continuing north along the west right-of-way line of South 8th Street, a distance of two hundred and eighteen (218) feet, thence east sixty-six (66) feet to the east right-of-way line of South 8th Street. thence south along the east right-of-way line of South 8th Street, two hundred and eighteen (218) feet, thence west sixty-six-(66) feet to the point of beginning.

That the Historical Name of the bridge is the Curtis Creek Bridge.

That the Style of the bridge is Stone Arch.

That the Date of construction is 1899.

That the Architect is Ernest Wood and the Builder is F.M. Menke Stone and Lime Co.

That among the architectural features which will be provided protection are as follows:

(1) All rough-hewn limestone surfaces.

(2) Stone capping on top of the wall of the bridge.

(3) Corbeled arch with keystone and voussoirs spanning Curtis Creek and Fern Hollow.

(4) Four semi-circular stone towers framing the arch, and topped by pedestrian alcoves (observation platforms).

(5) The four smaller circular abutment towers at each end of the bridge topped by circular capstone.

(6) Four cut stone drainage spouts located at either end of each entrance to the bridge.

(7) All smooth cut stone on surface of arch.

(8) Handcrafted wrought-iron railing.

The historical significance of the South Eighth Street Bridge is as follows:

This stone arch bridge was designed by Ernest Wood, a prominent Quincy architect. It remains one of only two stone bridges in the State of Illinois currently open to vehicular traffic on a daily basis.

29.1051 <u>Designation of 822 North Sixth Street</u> --- That 822 North Sixth Street, Quincy, Illinois is hereby designated a Landmark.

That the legal description of 822 North Sixth Street is as follows:

That part of Lot Six (6) in Rutherford and Smith's Subdivision of block thirty (30) of Willard Keyes' Addition to the City of Quincy, Illinois, according to the plat of said subdivision as recorded in the Recorder's Office of said Adams County, Illinois in Book 1 of Plats at page 101, thereof, which part of said Lot Six (6) is sounded as follows: Beginning at a point on the west line of said Lot Six (6) being the east line of Sixth Street or Sixth Avenue North, which is twenty-five and thirteen hundredths (25.13) feet south of the northwest corner of said Lot Six (6) and running thence south on the west line of said Lot Six (6), sixty and sixty-one hundredths (60.61) feet more or less and to a point thereon which is nine and thirteen hundredths (9.13) feet north of the southwest corner of said Lot Six (6); thence east one hundred thirty-eight and one-half (138 1/2) feet more or less and to the west line of an alley running north and south through said block; thence north on the west line of said alley sixty and sixty-one hundredths (60.61) feet more or less and to a point thereon which is twenty-five and thirteen hundredths (25.13) feet south of the northeast corner of said Lot Six (6); and west one hundred thirty eight and one-half (138

1/2) feet more or less to the place of beginning, situated in the City of Quincy, in the County of Adams, in the State of Illinois.

That the Historical Name of the house is the Samuel and Jane E. Brown House.

That the Style of the house is Queen Anne/Eastlake.

That the Date of Construction is 1886.

That the Architect or Builder is unknown.

That among the architectural features which will be provided protection are as follows;

(1) Overall two and one-half (2 1/2) story asymmetrical massing with a steeply-pitched primary hip roof and secondary gables, the two-story brick addition with a hip roof. and the one-story addition, attached to the two-story addition with a hip roof.

(2) Exterior materials of cut limestone foundation walls, and brick exterior walls.

(3) Brick chimney on south facade with decorative brickwork, brick chimney on the east facade of the two-story addition, and the short brick chimney on the south facade of the two-story addition.

(4) All window and door openings, including stone sills, stone lintels with carvings, scalloping and rosettes, segmental brick arches, wood framework, and glazing.

(5) One-story entry porch on the west facade with wooden brackets, post, rail, balustrade, and all carving associated.

(6) Rectangular two-story bay on the south facade with its second floor porch covered by a gable roof and all wood brackets. carving, and detailing associated.

(7) All decorative elements of brick, stone, and wood including:

(a) wood shingles and all other decorative wood elements in the gables

(b) wood brackets along the cornice

(c) smooth-cut stone beltcourses at the first and second floor levels on the west facade.

(d) decorative stone inset panels and pressed metal inset panels on the west and south facade (the relief in the panels form elegant swags, florals, beads, geometric patterns and borders)

(e) decorative brick banding on the north facade located even with tops of the first and second story windows.

(8) Dormer on the west facade with window, and carved wood in gable of roof.

(9) Brick sidewalk on the property between Sixth Street and city sidewalk, and limestone steps and sidewalk leading to the front porch.

That the historical significance of 822 North Sixth Street is as follows:

This two-story brick residence has many common Queen Anne and Eastlake elements, and its ornamentation makes it unique. Smooth-cut stone beltcourses, stone lintels with carvings, scalloping and rosettes, and decorative inset panels with reliefs of elegant swag, florals, beads, geometric patterns, and borders are built into the exterior walls.

29.1052 **<u>Designation of 1431 Spring Street</u>** --- That 1431 Spring Street, Quincy, Illinois is hereby designated a Landmark.

That the legal description of 1431 Spring Street is as follows:

The south one hundred-two (102) feet, one and one-half (1 1/2) inches of lot twelve (12) in block twenty-eight (28) in Alstyne's Addition to the City of Quincy.

That the Historical Name of the house is the Henry and Josephine Freiburg House.

That the Style of the house is Folk Victorian.

That the Date of Construction is 1879.

That the Architect or Builder is unknown

That among the architectural features which will be provided protection are as follows:

(1) Overall one and one-half (1½) story massing with a primary hip roof and secondary gable roofs.

(2) Cut limestone foundation walls and brick exterior walls.

(3) Chimney on the east facade with decorative brickwork, and tall chimney on the west facade.

(4) All window and door openings with segmental brick arches or stone lintels, stone sills, wood framework glazing, and original doors.

(5) One-story porches on the east and south facades (three in all), with wooden posts, rail, balustrade, brackets, and all carving associated.

(6) Decorative features such as:

(a) iron balustrade on main roof and bay roof.

(b) wooden barge board in gables.

(c) wooden cornice at the roofline.

(d) dormer on north facade with a gable roof.

(e) all wood carvings.

(f) Palladian window configurations under segmental brick arched openings in the gables of the south and east facade.

That the historical significance of 1431 Spring Street is as follows:

Born in Allendorf, Westpahlia, Germany in 1835, Henry Freiburg immigrated to the United States and Quincy in 1856 and within six years opened his own shoe store. In 1875, he developed a one-piece heel and shank patent with his brother-in-law, William Meyer, and later opened a shoe factory. He built this Folk Victorian residence in 1879, and expanded his business with a shoe factory at 513-521 North Fifteenth Street located behind his 1431 Spring Street residence.

Folk Victorian style differs from other styles of the period in that it takes elements from various Victorian styles and combines then in a vernacular tradition. The small scale of this house and simple treatment of most door and window openings shows the lifestyle of the modest shoemaker who built the house. However, decorative iron balustrades, wooden barge boards in the gables, and a wooden cornice make this house unique.

29.1053 <u>Designation of 1449 Maine Street</u>-- That 1449 Maine Street, Quincy, Illinois, is hereby designated a Landmark.

That the legal description of 1449 Maine Street is as follows:

A part of lot thirty-four (34) in Nevin's Addition to the City of Quincy, Adams County, Illinois, described as follows: Commencing at a point on the north line of Maine Street in the said City of Quincy eighty-three (83) feet east of the southwest corner of said lot thirty-four (34), running thence north two-hundred and fifteen (215) feet, more or less to the east line of said lot thirty-four (34), thence south along the east line of said lot, two-hundred and fifteen (215) feet more or less to the north line of Maine Street, thence west ninety-three (93) feet more or less to the place of beginning.

That the Historical Name of the house is the Isaac and Ellen Lesem House.

That the Style of the house is Queen Anne.

That the Date of Construction is 1890.

That the Architect or Builder is thought to be Harvey Chatten.

That among the architectural features which will be provided protection are as follows:

(1) Overall 2 1/2 story asymmetrical massing with a primary hip roof and secondary gables on the east and west facades and on top the hip (facing north and south).

(2) Exterior surfaces including:

(a) cut stone foundation and walls.

(b) first story walls of stone at the front and brick at the rear.

(c) all wood siding on the second floor level, wood fish scale shingles on the west tower, east gable and west gable, and plain wood shingles on the dome of the east turret.

(d) carved wood decoration, spindlework, and brackets.

(3) Tower on the southwest corner of the house with conical roof, conical cap and finial; the tower has distinctive sets of windows and a decorative dormer with turned wood truss, brackets, and carvings.

(4) Turret on the southeast corner of the house with a dome roof, conical cap and finial; three windows and wood carvings.

(5) One-story, wrap-around porch with Ionic columns, wood vaulted ceiling, wood floor, wood steps, wood railings, turned wood balustrade, wood cornice with dentils, pediment above the entry, composite column attached to the stone wall's southeast corner with a copper molding extending to the ceiling of the porch from which the turret above appears to spring.

(6) All existing window and door openings with stone and wood framework, decorative detailing, leaded glass, and clear glazing.

(7) Two brick chimneys with decorative brickwork located on the south and east facades and the brick chimney on the north facade.

(8) The east facade's garden entrance which protrudes at an angle with engaged Corinthian columns flanking the doorway.

(9) Second story sleeping porch addition on the northeast corner of the house.

(10) All brick walks and drive on the property and the brick sidewalk running parallel to Maine Street.

(11) The carriage house at the rear of the lot with the following features:

(a) cut stone first-story.

(b) wood shingle surfaces from second-story to roofline.

(c) primary hip roof with a secondary gable on the south facade.

(d) small round dovecote on the east end of the hip roof.

(e) round tower on the southwest corner of the structure.

(f) all door and window openings, including the framework and glazing.

That the historical significance of 1449 Maine Street is as follows:

This house is an outstanding example of high-style Queen Anne architecture. Its complicated massing, surfaces, and details pull together for a rich composition. There have been few changes from the original design except for a porte-cochere coterie on the west side removed in the 1970s, and a smaller porch removed and a classical inspired wrap-

around porch constructed in its place about 1910. The Carriage house on the rear lot contains many outstanding Queen Anne architectural details.

Isaac Lesem was born in Bavaria in 1832 and immigrated to the United States while in his early twenties moving to Quincy in 1856. Isaac and his brother, Solomon, established a very successful dry goods and wholesale business. They built two significant commercial buildings on North Third Street and one of them, 135-137 North Third Street, was built in 1871 and is also a designated Quincy Local Landmark.

29.1054 <u>Designation of 135 and 137 North Third Street</u> --- That 135 and 137 North Third Street, Quincy, Illinois is hereby designated a Landmark.

That the legal description of 135 and 137 North Third Street is as follows:

Parts of lots one (1) and two (2) in block fourteen (14) in the original survey of the town, now City of Quincy, Adams County, Illinois, described as follows: Beginning at the northeast corner of said lot one (1), thence west on the north line of said block fourteen (14) to the west line of the east half of lot two (2) in said block, thence south forty-four (44) feet to the place of beginning, the west twenty-four (24) feet of said above described particularly set forth in a certain alley-way easements and others to Isaac Lesem and Gustave Levi, bearing date June 16, 1871 and recorded in the Recorder's office of Adams County, Illinois, in book 75 of Deeds at page 575.

That the Historical Name of the building is the S. J. Lesem Building.

That the Style of the building is Commercial Italianate.

That the Date of Construction is 1871.

That the Architect or Builder is Unknown.

That among the architectural features which will be provided protection are as follows:

(1) Four-story brick construction with limestone foundation and a gently sloped roof.

(2) Cast iron quoins that visually strengthen the corners.

(3) Windows on the second and third storys are framed by two cast iron square engaged columns architrave and segmental arch and a stone sill supported by two small brackets.

(4) The fourth floor windows are famed by cast iron carved surrounds, capped by cast iron triangular pediments, and are connected by a continuous stone sill that stretches across the entire facade with a brick beltcourse supporting the sill.

(5) A soldier brick corbelling carries the cast iron cornice and central pediments; paired brackets, modillions and rosettes. The inscription in the pediment reads "ERECTED BY THE S. J. LESEM, BRO & C0. 1871".

(6) The cornice continues on the north facade with the only difference being that there are double brackets at either end and single brackets in between. The cornice is discontinued on the west and south facades.

(7) The windows on the second, third, and fourth storys of the north facade have cast iron carved surroundings, are capped with cast iron triangular pediments and the stone sills are supported by two small brackets. On the first floor level there are four small rectangular openings with carved surrounds and cornice, supported by two brackets, and one full size window, matching those on the second, third, and fourth floors, located at the far west end of the facade.

(8) The east facade first floor has a cast iron fluted Corinthian column at both corners of the storefront. The entire first story is capped with a plate metal cornice. A remodeling of the storefront occurred after 1913 by the Quincy Casket Company that included the following elements: the limestone base that extends across the entire facade, brick pilasters with smooth-cut beltcourse and stone capital that has three carved circles, and brick infill between the pilasters surrounding the window and door openings.

That the historical significant of 135 and 137 North Third Street is as follows:

The S. J. Lesem Building is one of Quincy's most important examples of the commercial Italianate style and the landmark structure of the City's once thriving warehouse district. It is also significant for its association with Isaac Lesem, a leading figure in the post-Civil War Jewish business community that shaped much of Quincy's early economic life. This building was one of four components of a block known in 1875 as Wholesale Row. This row of buildings, three of which still exist today, was erected of similar style, detail, and scale.

The Isaac and Ellen Lesem House of 1449 Maine Street is also a designated Quincy Local Landmark.

20.1055 <u>Designation of 3130 State Street</u> - That 3130 State Street, Quincy, Illinois, is hereby designated a Landmark.

That the legal description of 3130 State Street is as follows:

Beginning at the southeast corner of State Street and Thirtieth Street, measure 423 feet to the west of the east line and the south line of State Street, continue south 279 feet, west 221.5 feet, north 279 feet, and east 220.75 feet. Includes parts of the west one half of the southeast part of section 6, in township 2S, in range 8W, all in the City of Quincy.

That the Historical Name of the house is the Benjamin and Elizabeth Burroughs/Klarner House.

That the Style of the house is Italianate main structure; rear wing 2/3 I-house.

That the Date of Construction is 1864-65 main structure; circa 1850's rear wing.

That the Architect or Builder is unknown.

That among the architectural features which will be provided protection are as follows:

(1) All exterior brick and stone.

(2) Rusticated stone foundation beneath a string course of finished stone.

(3) Two original brick chimneys on the east and west gables.

(4) Steeply pitched roof with a gable at the east and west ends.

(5) One 4-over-4 arched window with a stone sill set into each of the end gables.

(6) Cornice with brackets at the north roof line, and a raking cornice with brackets at the east and west gables.

(7) North entrance having sidelights and a large arched transom with curving traceries.

(8) North porch having eight freestanding and two attached shouldered square columns supporting a cornice and a flat roof. Six of these columns are clustered into two groups of three which rise from shared wooden paneled bases.

(9) Floating brackets which decorate the east, north, and west sides of the porch at the cornice.

(10) Two polygonal bay windows elements, one at each side of the northern entrance porch, each consisting of one 4-over-6 double hung window flanked by a 2-over-3 double hung window at either side.

(11) Twin arched, 1-over-1 double hung windows, sharing a common stone sill and arched stone lintel, resting above the north entrance on the second level.

(12) All windows having stone sills and stone lintels.

(13) All window shutters.

That the historical significance of 3130 State Street is as follows:

The Burroughs House (main structure facing north) was built in 1864-65 near the center of a 78-acre farm named "Walnut Acres". Benjamin Burroughs made his fortune during the gold rush in Colorado in 1859. He then moved to Quincy and purchased land in Melrose Township and built this house. The land had already been developed by Walter and Matilda Emery who purchased and owned it from 1835 to 1851. It is believed a small brick 2/3 I-house was built by the Emerys in the 1840s or 1850s. At some time, the small older house was attached to the main structure and now includes the rear wing.

Gustav Klarner purchased the house, farm, and orchards in 1894 and established the Quincy Star Nurseries. The Klarner family owned the house and a few surrounding acres until 1986. For over 100 years the common name for this landmark was and continues to be the Klarner House.

29.1056 **<u>Designation of 2531 Prentiss</u>** --- That 2531 Prentiss, Quincy, Illinois, is hereby designated a Landmark.

That the legal description of 2531 Prentiss is as follows:

Lot 1 in Anderson Court, in the City of Quincy, County of Adams, in the State of Illinois.

That the Historical Name of the house is the Benjamin and Electa Terrel House.

That the Style of the house is Vernacular Two-Thirds Double Pile.

That the Date of Construction is circa 1840.

That the Architect or Builder is unknown.

That among the architectural features which will be provided protection are as follows:

(1) All exterior brick and stone.

(2) Windows having stone sills, brick lintels, and multi-paned sash.

(3) The south entrance having a brick lintel, and transom lights and side lights of small rectangular panes of glass.

(4) Raised seam metal roof.

(5) East extension having a catslide roof.

(6) A 1930's Garage and Garden House having:

(a) an east side door with a kick lintel.

(b) windows with concrete sills and brick lintels.

(c) original raised seam metal roof.

(d) multi-paned sash in all the windows.

(7) Brick walkway and limestone curbstone to the south of the property.

(8) Stone sill beneath south entry.

The historical significance of 2531 Prentiss is as follows:

One of four surviving residences once associated with the Mission Institute Number Two (also called Theopolis), the Terrel House is the only surviving brick house

and retain the highest integrity. The Mission Institute achieved notoriety because of the abolitionist stand taken by its founders and teachers. Built circa 1840, it is a typical two-thirds double pile house with a side hall with staircase and two rooms on each floor, one behind the other. The house was altered around 1950, but there was little change to its footprint, roofline, or general appearance. A garage and garden shed was built in the 1930's to replace a barn and closely matches the house in scaling and material.

Benjamin Ana Electa Terrel moved from Connecticut to Quincy to be part of the Mission Institute. Their house was built just to the east of the Mission Institute grounds and their children Charles and Mary, were students at the school.

29.1057 <u>Designation of 635 South 13th Street</u> --- That 635 South 13th Street, Quincy, Illinois is hereby designated a Landmark.

That the legal description of 635 South 13th Street is as follows:

Woods Survey beginning at the southwest corner of lot 10, east 84.25 feet, north 40.08 feet, northeast 31.29 feet, northeast 23.85 feet, north 40.082 feet, west 125.25 feet, south 140 feet, part of block 117, all in the City of Quincy in the State of Illinois.

That the historical name of the structure is the St.Peters Evangelical Church-Hall.

That the style of the structure is Simplified Tudor Revival.

That the architect or builder is unknown.

That among the architectural features which will be provided protection are as follows:

(1) All exterior masonry and all stone trim.
(2) Southwest cornerstone.
(3) Projecting main entrance bay with four-light transom.
(4) Stone front entrance steps.
(5) Front entrance doors and light fixture.
(6) Buttresses on north, west, and south facades.
(7) All three-over-one windows on the north, west, and south facades.
(8) Rear entry door at northeast corner of the main building.

That the historical significance of 635 South 13th Street is as follows:

The building was originally erected in 1925 as the St. Peters Evangelical Church-Hall. The Quincy Community Little Theatre used the building for stage productions during a 31-year period, from 1964 to 1995. During its tenure at 13th Street and Payson Avenue, the Quincy Community Little Theatre's membership grew substantially, and in a typical season, the QCLT scheduled six regular productions and two additional plays for juvenile audiences. The facility offered an intimate experience for patrons, but it could not provide the technical flexibility demanded by modern productions. The QCLT decided to seek larger quarters, and in 1995 it moved to a new theatre in the Oakley-Lindsay Civic Center.

29.1058 <u>Designation of 1100 State Street</u> -- That 1100 State Street, Quincy, Illinois is hereby designated a Landmark.

That the legal description of 1100 State Street is as follows:

Lot five (5) in block Seventy-Two (72) in John Wood's Addition to the City of Quincy, in Adams County, Illinois, according to the certain subdivision and plat of said block set out and contained in the decree recorded in Chancery Record A22 at page 307, in the office of the clerk of the Circuit Court of said county, and said plat is generally known

as the plat of Mathew Dick Subdivision of said block Seventy-Two (72), situated in the County of Adams, in the State of Illinois.

That the historical name of the house is the Albert and Anna Dick House.

That the style of the house is Queen Anne.

That the date of construction is 1889.

That the architect or builder is Buerkin and Kaempen, contractors.

That among the architectural features which will be provided protection are as follows:

(1) Overall 2 1/2 story, asymmetrical massing with primary hip roof and secondary gables, all steeply pitched.

(2) Exterior materials of cut limestone foundation walls and brick walls.

(3) Three brick chimneys with decorative brickwork, stonework, and iron escutcheons located on the west and east facades, and the chimney on the south facade.

(4) Tower on the northwest corner, springing from the one-story porch, topped with an imperial dome and finial.

(5) All window and door openings, including stone and wood framework, glazing, stained glass, and decorative wood detailing on frames.

(6) The one-story, wrap-around porch with relief in the pediment of the gable, solid brackets, wooden rail, wooden balustrade, wooden posts, and all associated decorative wood detailing.

(7) All decorative elements, including:

(a) Smooth cut stone water table.

(b) Rough cut beltcourses beneath the cornice in the north, east and west facades, and on the second floor level on the east facade bay.

(c) Wood shingle surfaces on the tower and in the gables.

(d) All wood carving.

(e) Wood cornice beneath the roofline.

(f) Carved stone arch framing first floor window with smooth-cut belt courses.

(g) Pair of semi-circular arched windows on the west facade.

(h) Decorative brick panel on the west facade beneath left semi-circular window.

(8) One-story brick garage built before 1927, with a flat roof, two original wooden doors, limestone foundation, smooth cut stone banding, wood cornice with arch, and stepped roofline.

That the historical significance of 1100 State Street is as follows:

The Dick brothers, Mathew, John and Jacob immigrated to the United States from Bavaria in 1854. Within two years, the brothers settled in Quincy, and in 1860, began the Dick Brothers Brewery at York and Ninth Streets. By 1895, their business had become the largest brewery in the state of Illinois. The Dicks also owned the Dick Brothers Milling Company, a grain and milling operation.

When the three founders of the company died, their sons continued the family business. Albert Dick, the son of Mathew Dick, became the company's secretary. The business prospered for over 90 years, until 1953 when the company liquidated.

In 1889, Albert and Anna B. Geiferech married, and later had two sons, Arthur J. and Willis E. Dick. Also in 1889, Albert and Anna built the house at 1100 State Street.

Buerkin and Kaempen were contractors for the project, charging $1,140 for the brickwork and $900 for the stonework.

The property was sold to George L. Klein in 1931.

The house is listed as a contributing property of the South Side German Historic District.

29.1059 <u>Designation of 1617 Hampshire Street</u> --- That 1617 Hampshire Street, Quincy, Illinois is hereby designated a Landmark.

That the legal description of 1617 Hampshire Street is as follows:

The south half lot of Seventeen (17) of Nevin's Addition to the City of Quincy, except the west Forty-five (45) feet thereof.

That the historical name of the house is the Mathew B. and Electa L. Finlay House.

That the style of the house is Italianate.

That the date of construction is 1861.

That the architect or builder is Eaton Littlefield & George Bauman, builders.

That among the architectural features which will be provided protection are as follows:

(1) Overall two-story, symmetrical massing with a low-pitched hip roof, and two story service wing to the rear.

(2) Rough cut limestone foundation walls, smooth cut stone watertable and brick exterior walls.

(3) Four symmetrically placed brick chimneys with stepped brick courses at the top and capped with stone, one brick chimney on two-story service wing, also with decorative brickwork and stone cap.

(4) Double cupola of wood with all of its wood detailing, brackets, arched windows, low-pitched hip roof, and finial with brackets.

(5) With the exceptions of two casement windows on the west side of the service wing, and two double-hung pantry windows on the east side of the service wing, all original window openings on the east, north, and west facades, and the first floor of south facade, with stone lintels and sills, wood framework and glazing; and second-story windows on the south facade with stone sills and stone segmental window crowns supported by brackets.

(6) The one-story, full-facade porch with large wood paired brackets and smaller wood brackets in between the large brackets, turned wood balustrade, wood railing, wooden double posts, wood floor, and wood steps.

(7) The semi-circular brick arched front door opening with round arched top-light and rectangular sidelights, and door with semi-circular shaped top.

(8) The deep overhang of the roof with frieze below and large wood paired brackets with smaller brackets between the large pairs on the south facade, and large wood paired brackets on the east, north and west facades, and single brackets in the three sides of the service wing.

(9) The brick walk on the property that runs perpendicular to Hampshire Street from the City sidewalk to the front steps, the brick walk across the front of the porch, and the brick City sidewalk running parallel to Hampshire Street.

That the historical significance of 1617 Hampshire Street is as follows:

Mathew Finlay was born in Ireland in 1821. By 1847, Finlay had gone into the clothier business with William Powers at 328 Maine Street in Quincy, Illinois. Finlay broke

from the partnership in 1876 and began his own business as a merchant tailor at 328 Maine Street.

In 1861, Mathew Finley constructed his house at 1617 Hampshire Street at the cost of $10,000. This amount was second in Quincy that year, only to John Wood's octagonal house which cost $100,000 to construct. The house has been owned by only two families in its entire history.

The Mathew B. and Electa L. Finlay house is an excellent example of the Italianate style. The massing, materials, and symmetry follow those of most Italianate homes. The attention to detail, shown in the doorway, cupola, the window crowns, porch, and brackets represent highstyle Italianate decoration. There is a very similar house to the Finalys at 421 Jersey Street.

The house of Mathew B. and Electa L. Finlay is listed on the National Register of Historic Places as a contributing property of the East End Historic District.

29.1060 <u>Designation of 1422 Maine Street</u> - - That 1422 Maine Street, Quincy Illinois is hereby designated a Landmark.

That the legal description of 1422 Maine Street is as follows:

A part of lot Fifty-three (53) in Nevin's Addition to the City of Quincy, bounded and described as follows: Beginning at the northeast corner of said lot, running thence south on the east line of said lot to a point One Hundred-seventy (170) feet north of the north line of Jersey Street, in said City, thence west parallel with said north line Sixty-nine (69) feet, thence north parallel with said east line to the south line of Maine Street, in said City, and thence east on said south line of Maine Street, Sixty-nine (69) feet to the place of beginning.

That the historical name of the house is the Morris and Lebra Felsenheld House.

That the style of the house is Queen Anne/Eastlake.

That the date of construction is 1876.

That the architect or builder is unknown.

That among the architectural features which will be provided protection are as follows:

(1) Overall massing of the two-story structure with its steeply pitched, multiple hip roof, the two-story wing to the rear, and the one-story wing attached to the two-story rear wing.

(2) Exterior materials including the limestone foundation walls and brick exterior walls.

(3) Decorative brick chimney on the east facade with stone trim and decorative brickwork, and the simple brick chimneys on the east and south facades.

(4) All window and door openings with stone lintels that have scallops and carvings, brick lintels, stone sills, and wood framework.

(5) The double front door opening with full toplight, stone header with scalloped edge and carved woodwork.

(6) Primary one-story, full-facade porch on the north facade and the secondary one-story entry porch on the northeast corner of the house, both with wood rails, balustrade, posts, and floor, as well as all carving.

(7) All decorative elements, including brick beltcourses, wood cornice, wood brackets, carving between brackets, and angled brickwork at corners capped with stone.

(8) Lancet-shaped dormers on the north and south facades with shell carved at the peak.

(9) One-story bay on east facade with original stone and brickwork, and decorative wood trim.

(10) Brick walk from front porch to Maine Street sidewalk, and brick City sidewalk parallel to Maine Street.

(11) Low stone wall on west edge of property.

That the historical significance of 1422 Maine Street is as follows:

Morris Felsenheld was born in Bavaria in 1835. When Felsenheld was thirteen years old, he moved to the United States. He settled In Pennsylvania, New York, and Aurora, Illinois before coming to live in Quincy in 1871. Morris Felsenheld and Emmanuel Felsenheld owned and operated a dry goods business located at 420 Maine Street. The partnership dissolved, and Morris Felsenheld continued the business on his own.

In 1876, Morris Felsenheld built the house at 1422 Maine Street. It was designed in the Eastlake version of the Queen Anne Style. The Felsenheld house is unique because of the decorative brickwork and stonework, and also because of the wood carvings on the porches and cornice. Morris Felsenheld was a member of the Masonic Order, and his interest in the organization shows in the Masonic symbols carved throughout the interior woodwork.

The Morris Felsenheld House is listed on the National Register of Historic Places as a contributing property of the East End Historic District.

29.1061 <u>Designation of 405 South 24th Street</u> --- That 405 South 24th Street, Quincy, Illinois is hereby designated a Landmark.

That the legal description of 405 South 24th Street is as follows:

Littlefield Subdivision part of section 6, north 110' of west 200', Lot 3, SC 3, TN 2S, RNG 8W.

That the Historical Name of the house is the Samuel and Lida Scott House.

That the Style of the house is Queen Anne/Shingle.

That the Date of Construction is 1887.

That the Architect or Builder is unknown.

That among the architectural features which will be provided protection are as follows:

(1) Wood clapboard siding.

(2) Corner turret with conical roof.

(3) Front porch dominated by heavy bracketing and spindlework.

(4) Heavily moulded cornice.

(5) Steeply pitched roof with gables.

(6) Diamond windows in the gable peaks on the west and south elevations.

(7) Circular window on north elevation.

(8) Shingles in upper gable ends.

(9) Shingle section dividing first and second floor topped by single course of decorative shingles.

(10) Low stone wall running parallel to turret and along south elevation, topped by stone cap.

(11) Two-story square bay on south elevation with moulded cornice and moulded wood work between the first and second floor.

That the historical significance of 405 South 24th Street is as follows:

The Samuel and Lida Scott House is a beautiful example of the Queen Anne style. The house was constructed in 1887 for Samuel and Lida Scott. Scott was a photographer whose business was located at 235 North 5th Street, and later 429 Hampshire Street. Scott was, for a time, associated with Oliver P. Scott in business.

The Queen Anne style uses wall surfaces as primary decorative elements. This is accomplished through such devices as bays, towers, overhangs, wall projections and by using several wall materials of differing textures. The elements of 405 South 24th Street which represent the Queen Anne style include a steeply pitched roof with a dominant front-facing gable, a round tower or turret at one corner of the front facade, patterned shingles in the upper gable ends, a single course of patterned shingles across the front facade and turret, a one-story, partial-width front porch, and spindlework ornamentation.

29.1062 <u>Designation of 230 South 24th Street</u> --- That 230 South 24th Street, Quincy, Illinois is hereby designated a Landmark.

That the legal description of 230 South 24th Street is as follows:

Lawrence and Flachs - Ex W 28.43' M/L - S 80' Lot 17 and S 80' Lots 18, 19 & 20.

That the Historical Name of the house is the Ray M. and Kate Oakley House.

That the Style of the house is Prairie.

That the Date of Construction is 1913.

That the Architect or Builder is attributed to Martin Geise.

That among the architectural features which will be provided protection are as follows:

(1) Low-pitched hipped roof with gables and overhanging eaves.

(2) Rusticated limestone foundation wall with interrupting basement windows.

(3) Wrap-around front porch with stucco porch wall and piers.

(4) Stucco exterior walls.

(5) Front facade dormer with double-hung windows and patterned glazing on top lites.

(6) 9/1 windows and 6/6 side lites on second floor front facade.

(7) Front entrance way with side lites and transom.

(8) Rear entrance way with transom.

(9) Patterned glazing on first floor window top lites.

(10) Two and 1/2 story bay on south elevation with gabled dormer and patterned glazing on windows in gable.

(11) First floor bay with overhang on west elevation.

(12) Two story wood porch with second floor enclosed on west elevation with double windows with 9 lites.

(13) Three-window bay on north elevation at one and one-half story level.

That the historical significance of 230 South 24th Street is as follows:

This fine example of the Prairie Style was constructed in 1913 for the Oakley family, owners of the Quincy Herald (later merging with the Quincy Whig-Journal to become the Quincy Herald-Whig) and later WGEM television station. Ray Miller Oakley was born in 1876 in Iowa. He came to Quincy in 1891 to work as an office boy at the Quincy Herald, which was partially owned by his uncle, C.L. Miller. Oakley eventually became general manager and part owner. This management continued after the merger.

Oakley married Kate Cameron Burks in 1897 which resulted in five children. Ray Oakley died May 12, 1948 followed by his wife Kate on January 19, 1953. Their youngest son, Thomas Crawford (T.C.) Oakley, eventually took over as general manager of the newspaper and also became president of the Quincy Broadcasting Company, which managed the television station. T.C. and his wife, Mary, also lived at 230 South 24th Street. T.C. died in 1969. The house remained in the Oakley family until after Mary's death in 1993.

The house is attributed to prominent Quincy architect Martin Geise. Geise, who was born and raised in Quincy, attended St. Francis College (now Quincy University) and at the age of 15 began employment under Ernest Wood, where he remained for seven years. He then spent a number of years in the office of Harvey Chatten. Geise designed many commercial structures in Quincy, including the Illinois State Bank Building, the Block & Kuhl Building, Jefferson and Irving Schools and the Elkton Hotel.

The Oakley House is an outstanding example of the Prairie Style, constructed of stucco with a low-pitched hipped roof with gables and over-hanging eaves typical of Prairie Style architecture. The house contains a rusticated limestone foundation wall with interrupting basement windows. The prominent front porch wraps around the east and part of the south facade. The porch includes a stucco porch wall and stucco piers. The front entrance way includes side lites and a transom. A dormer on the front facade roof includes double-hung windows with patterned glazing on the top lite. First and second floor windows have large 9/1 windows with 6/6 side lites on the second floor front facade.

The south facade includes a two 1/2 storied bay with gabled dormer, double windows in the gable with patterned glazing, and four single-paned continuous windows along first floor facade.

The west facade includes a first floor bay with overhang, matching roofline and a two-story wood porch with the second floor enclosed. The three porch windows on the west facade are double windows with nine lites. A single story entrance way includes a transom.

The north facade includes a three-window bay with 9/1 lites, and the bay has an overhang at the one-1/2 story level.

The house is listed as a contributing structure in the East End National Register Historic District.

29.1063 **Designation of 909 Maine Street** --- That 909 Maine Street, Quincy, Illinois is hereby designated a Landmark.

That the legal description of 909 Maine Street is as follows:

Church Survey Lots 26-27-28 and N 5' of Lots 29-30 and of W 1/2 of Lot 31 and E 1/2 of Lot 31 and all of Lots 32-33.

That the historical name of the building is George Keller & Sons Implement Company.

That the Style of the building is Commercial.

That the Date of Construction is 1927.

That the Architect or Builder is George P. Behrensmeyer.

That among the architectural features which will be provided protection are as follows:

(1) "L" plan configuration.

(2) Stone trim sills and lintels on second floor windows on the south and west facades.

(3) Stone geometrical patterns and decoration on the south and west facades.

(4) Soldier brick pattern on the south and west facades.

(5) Three-bay store front configuration on the south and west facades.

(6) Transoms above store front windows (five on the south facade and three on the west facade).

(7) Second floor windows containing 12 lites on the south and west facades.

(8) Brick parapet with stone cap.

(9) Brick exterior walls on the east, south and west elevations.

That the historical significance of 909 Maine Street is as follows:

George Keller & Sons, at 909 Maine Street, is a significant structure worthy of local landmark status for several reasons. Architecturally, it is a fine example of the Commercial Style of the early 20th Century. Also, George Keller & Sons, for whom the building was built, has been in business in Quincy since 1880 and is a prominent local business. Another significant factor in landmarking the building is that it is the work of a prominent Quincy architect, George Behrensmeyer.

George Keller and his partner, J. P. Wenzel, founded a farm implement business in 1880 known as Wenzel and Keller. A two and one-half story frame building was erected on the northeast corner of 9th and Maine in 1882 and was occupied until the new building was opened next door in 1927, after which the 1882 structure was razed. George Keller acquired the sole ownership of the firm in 1893. Later, his four sons were taken into the business. Oscar Keller in 1898, Art Keller in 1907, Roy Keller in 1912, and Ralph Keller in 1915. A farm seed department was started around 1900 and as the business expanded, the four sons assumed separate responsibilities within the business with Oscar as general manager and buyer, Arthur as office manager, Roy in charge of the seed department, and Ralph supervising the farm equipment retail sales and services. Beginning in 1927, with the construction of the new building, Oscar's son Robert began working at Keller's in charge of a new garden seed department. Another of Oscar's sons and Arthur's son also joined the firm in the late 1930's. The firm was incorporated in 1954, with Arthur Keller, President; Robert Keller, Secretary; G.A. Keller, Treasurer; and James Keller, who entered the business after World War II, as Assistant Secretary. The business has remained in the hands of the Keller family to this day.

George Behrensmeyer, the architect of the building, was born in 1869 in Quincy and attended Quincy schools. Early on he learned the carpenter's trade, and after graduation from Quincy High School attended the University of Illinois, where he graduated in 1893. Upon graduation he returned to Quincy and began practicing architecture. He was associated with John Batschy, a prominent local architect, but was in business alone for most of his long career. In 1925 he began a partnership with Wilbert E. Hafner, forming the firm of Behrensmeyer & Hafner. Some of the other buildings he designed in Quincy include the Western Catholic Union office building, Masonic Temple, the Villa Katherine, Quincy Senior High School (now Junior High School), St. Rose of Lima Catholic Church, the Quincy Hotel, Dick Brothers Brewery, Trinity Evangelical and Reformed Church, Union Methodist Church and Dewey School. Behrensmeyer's work has also included numerous homes as well, and his work has played an important part in the physical development of Quincy. As was stated at his funeral, "Remove the buildings he designed and you would scarcely know the face of Quincy."

The brick structure, constructed in 1927, is a prime example of the Commercial Style, which predominated in American downtowns from 1900 to 1940.The building is two floors, with three bays on each facade. Characteristics of the building which are elements of the Commercial Style include three bays, a flat roof with parapet, brickwork, geometric patterns, display windows with transoms and continuous lintels and sills.

29.1064 **Designation of 917 Maine Street** - - That 917 Maine Street, Quincy, Illinois is hereby designated a Landmark.

That the legal description of 917 Maine Street is as follows:

Samuel P. Church Survey -- Lots 34, 35 and 36 of Block 4.

That the Historical Name of the building is The Lubbe Building.

That the Style of the building is Commercial.

That the Date of Construction is c. 1897.

That the Architect or Builder is unknown.

That among the architectural features which will be provided protection are as follows:

(1) Brick entablature on front facade with parapet and limestone cap, brick dentils under a brick course and decorative brick work along the frieze.

(2) Raised brick quoins.

(3) Single-door entryway with transom and brick arch header on the front facade and north elevation.

(4) Limestone foundation and front entryway step on front facade.

(5) Rusticated limestone base on east, west and north elevations.

(6) Brick parapet with limestone cap on the east and west elevations in a step-down pattern.

(7) Limestone sills and brick arch headers on all windows.

(8) Brick exterior walls.

That the historical significance of 917 Maine Street is as follows:

The Lubbe Building, at 917 Maine Street, is significant due to its small size and architectural craftsmanship. The building is a small, commercial edifice that represents a codified version of the brick-front Commercial Style. Some of these characteristics include brick cladding, a flat roof with a parapet, single entrance door with transom, dentils, and decorative brickwork. These elements, along with its limestone foundation, its small, compact size, and the solid craftsmanship, provide a functional, yet aesthetically pleasing 19th Century commercial building that is a handsome addition to the Maine Street commercial district.

The Lubbe Building was constructed around 1897 and was owned by Roman John and Frank Anton Lubbe. Mrs. Katie Lubbe, a widow, ran a store that sold notions and fancy goods until around 1910. After that time, the building changed hands frequently until purchased by Keller's in 1969.

29.1065 **Designation of 2150 Maine Street** - - That 2150 Maine Street, Quincy, Illinois is hereby designated a Landmark.

That the legal description of 2150 Maine Street is as follows:

Lawndale E 20' of N 100' of Lot 2 and Beg. NW corner of Lot 3, E 80' of S 195', W 26.67' of N. 14.1', W 53.33' N to Beginning Point of Lot 3.

That the Historical Name of the house is the Otho C. Poling House.

That the Style of the house is Queen Anne/Shingle with Gothic Revival detailing.

That the Date of Construction is 1897.

That the Architect or Builder is Ernest M. Wood.

That among the architectural features which will be provided protection are as follows:

(1) Brick exterior walls and wood shingle cladding.
(2) Recessed arches on north and west facades.
(3) Two brick chimneys.
(4) East facade configuration.
(5) East facade double brackets.
(6) Trefoil windows on north, east and west facades.
(7) Octagonal dormer on the north facades.
(8) Rounded front porch turret.
(9) Lancet window with decorative balconet on west facade.
(10) Existing roof line.
(11) Curved window on east facade.
(12) Existing mouldings and window cornices.

That the historical significance of 2150 Maine Street is as follows:

The Otho C. Poling House, which is listed as a contributing structure in the East End National Register Historic District, was constructed in 1897 for the Polings. Otho Poling was born June 20, 1871 into a prominent Quincy family. His father, Theodore Poling, was a prominent businessman in Quincy, partnering a law firm until 1885, when he founded T.C. Poling Company, a mortgage banking and investment firm. Otho began working as a clerk at T.C Poling Company in 1891, where he stayed until about 1899. In 1900 he began as a cashier at the Quincy Savings & Loan office, where he stayed through 1906. He married Mary and is the father of two children, Frances E. and Howard 0. Poling. Poling lived at 2150 Maine Street until 1910, and he left Quincy after 1917.

The house was designed by the prominent local architect Ernest M. Wood. Wood was born and raised in Quincy and at the age of 23 became interested in architectural drafting. As was customary at the time, he trained under a prominent local architect, Harvey Chatten, who provided Wood's only apparent education in architecture. By 1891 Wood had left Chatten's firm and begun working for himself. Wood designed many prominent buildings in Quincy, including the Newcomb House at 16th and Maine, Washington School, the Stone Arch Bridge, and several Prairie Style buildings. He was the prominent local architect in the Prairie Style and is widely considered to have spread the influence of Frank Lloyd Wright and the Prairie Style throughout western Illinois.

The Otho C. Poling House is an architecturally significant building in Quincy due to its combination of architectural styles. The house is a mixture of Queen Anne and Shingle styles, with detailing influenced by the Gothic Revival style. Some examples of the Queen Anne elements of the house include the asymmetrical plan and massing, the use of bays, overhangs, the octagonal dormer, recessed arches under gables, and the covered front porch with turret at the west end. Elements of the Shingle Style, which incorporates wood shingle siding on the upper floors, are more restrained. Wood experimented in the Shingle Style in the late 1890's and his interest seems to derive from the William Bull House at 222 South 16th Street, designed by Chicago architect Joseph L. Silsbee in 1887, who was also a mentor of Frank Lloyd Wright. Wood utilized the movements of the roof outward to include the wide verandahs as a means to providing for a sense of interrelation between

interior and exterior. This single expanse of roof to incorporate the porch provides a continuous eave line across the front facade. The front porch, originally open, has since been enclosed. The house also has several details which were influenced by the Gothic Revival style. These include trefoil arched windows and lancet windows.

29.1066 <u>Designation of 403 South 16th Street</u> --- That 403 South 16th Street, Quincy, Illinois is hereby designated a Landmark.

That the legal description of 403 South 16th Street is as follows:

Lot 2, Block 3, Reiss Survey Lots 1 and 2.

That the Historical Name of the house is the John Quincy Adams House.

That the Style of the house is Italianate.

That the Date of Construction is 1879.

That the Architect or Builder is unknown.

That among the architectural features which will be provided protection are as follows:

(1) Wood clapboard siding.

(2) Overhanging eaves with heavy cornice which includes modillions and articulated frieze with tightly spaced brackets over sawtooth vertical wood blocks.

(3) Cornice frieze windows on all facades.

(4) Full-width front porch with carved scroll wood porch supports and wood railings and large-eaved brackets with modillions.

(5) Double front door with single transom and pediment.

(6) Secondary entrance porch on south facade matching front porch with single door, transom and pediment.

(7) Two-story octagonal bay on north facade.

(8) Two circular windows framed with hoods on the north facade.

That the historical significance of 403 South 16th Street is as follows:

The house at 403 South 16th Street was built in 1879 for John Quincy Adams, a local businessman who owned J.Q. Adams & Co., produce and apple dealers, with George Adams and Adams, Dickhut & Co., port packers, with George Adams and William Dickhut. In 1884, Willis Haselwood purchased the property from Adams, where he remained for many years. Haselwood was the County Clerk in Quincy for 25 years. He was also Vice President of Ricker National Bank, President of Gem City Building and Loan Association, and President of the W.L. Distin Ice and Produce Company.

The house is a prime example of the Italianate Style that was widespread from the 1840's through the 1880's. With its low-pitched, hipped roof, three-rank front facade with tall, narrow windows, elaborate cornice with dentils and modillions, and full front porch with caved wood supports, it demonstrates the characteristics of the most common subtype of the Italianate Style. Surface articulation is most prevalent in the frieze band and overhanging cornice. It is significant in that it represents one of the few frame Italianate houses in Quincy. The house is listed as a contributing structure in the East End National Register Historic District.

29.1067 <u>Designation of the alley between 16th Street, 18th Street, Kentucky Street and State Street</u> --- That the alley between 16th Street, 18th Street, Kentucky Street and State Street, Quincy, Illinois is hereby designated a Landmark.

That the legal description of the alley is as follows:

The alley located in Anna V. Reiss Survey and R.F. Newcomb Subdivision between 16th Street, 18th Street, Kentucky Street and State Street.

That the Historical Name of the Alley is the "H" shaped alley between 16th Street, 18th Street, Kentucky Street and State Street.

That the Date of Construction is 1881.

That the Architect or Builder is unknown.

That among the architectural features which will be provided protection are as follows:

(1) H-plan construction.

(2) Brick construction.

The alley is a significant feature of the development of Quincy for several reasons. First, its H-plan is unique in the city and is located in a double-block. Most of the double-blocks in the East End Historic District do not contain alleys as they were larger estates or shared by a few and divided up later in development. Second, it still retains its brick infrastructure and basic integrity, despite a few asphalt patches. Third, the grouping of out-buildings along the alley or viewed from the alley create an atmosphere of cohesion and bring a sense of place to the alley.

The alley was constructed in 1881 as part of Richard F. Newcomb's Subdivision in Anna V. Reiss' Addition. A portion of the alley is located in the East End National Register Historic District.

29.1068 <u>Designation of Park Place Local Historic District</u> --- The area bounded by South 12th Street, the alley between Jersey and Park Place, South 14th Street, and the alley between Park Place and Kentucky, including lots 2-29 of the Par Place addition with the following exceptions:

217 South 12th Street - north 60 feet of lot 15.

320 South 14th Street - south 42 feet of east 68 feet of lot 29.

The Park Place Historic District includes the residences built in Quincy's first planned addition according to the covenant established by the developers, Anton Binkert and John Cruttenden. Binkert and Cruttenden purchased this land, part of the G. B. Dimock estate, in 1887 for a price of $4,000. They divided the entire area, from 12th to 14th and Jersey to Kentucky into 64 lots. The houses constructed on the 28 lots on each side of the Park Place boulevard, and extension of York Street, were required to follow the covenant established with the construction of the first house on the corner of 1200. The covenant required that all the houses be at least two stories, constructed of either stone or brick, and cost at least $3,000. They also had to follow a standardized setback, and no driveways were allowed to exit on the boulevard. These requirements attracted a variety of wealthy and notable families to construct houses on this edge of the town. By 1895, sixteen of the twenty-five houses were already constructed, and the rest were built prior to 1918.

The neighborhood is a mixture of high style architecture styles from around the turn of the century, particularly Queen Anne and Prairie School. The requirements created an uniform neighborhood yet allowed unique variations in individual designs. The Queen Anne houses exhibit a recessed portion of the facades, porches with decorative spindlework, double door entries, decorative glass transom windows, windows with multipanes over a single pane, gables, turrets, brackets, and decorative brickwork. The Prairie School houses exhibit overhanging eaves, geometric decoration, and horizontal emphasis. Porches were added onto some of the houses within the first few decades of the

original construction and contribute to the significance of the neighborhood. Each house has been maintained so that the neighborhood continues to demonstrate this high class turn of the century character.

The 50 foot center park, with a fountain on the west end, was donated to the Quincy Boulevard and Park Association by Binkert and Cruttenden. For three years, the partners paid the water bill to maintain the grass and fountain. The fountain was removed in the early part of this century, and the park is now maintained by the Quincy Park District. After debate over the type of surfacing, the boulevard was finally paved with brick in 1903. It is one of the oldest boulevards still existing in Quincy, and the brick streets fare two of the last few that remain uncovered. The south alley is still paved with brick also.

The area is currently included in the Quincy East End Historic District of the National Register of Historic Places. Listed as significant structures are the houses at 1200, 1201, 1206, 1214, 1220, 1224, 1241, 1254, 1269, and 1270. The house at 1200 and 1224 have been designated local landmarks.

In addition, some general characteristics of the subdivision are considered significant to the historic character of Park Place. These significant features include:

(1) Brick streets on both sides of the boulevard, limestone curbs.

(2) Central park area - green space (grass, trees, etc.).

(3) No driveway access from boulevard - alley access only for garages.

(4) Standardized setbacks - approximately 45 feet from sidewalk (some porches extend further).

<u>1200 Park Place</u> --- Cruttenden/Tibbetts residence - significant features:

(1) Brick construction with stone foundation.

(2) Partial front porch.

(3) Facade and west gables.

(4) Turret with Moorish cap.

(5) Round turret on east side.

(6) One over one sash windows.

(7) Double door entry.

(8) Fishscale pattern shingles on gables and turret.

(9) Brickwork on chimneys, frieze, belt course on east turret, panel under center window on west side.

(10) Stone bands for second story window lintels.

(11) Circular facade window - stained glass in top and sides.

(12) Stained glass in transom window of entry, second floor facade windows, and turret windows.

(13) Stone window sills.

(14) Queen Anne transom in central window on west side.

(15) Palladian gable windows on facade (north) and west.

(16) Carved shallow arch lintels with flat segmented arch.

(17) Eyebrow window in roof on west side between chimney and gable.

<u>1201 Park Place</u> --- John Sieckman residence, Elmer & Lenore Long residence - significant features:

(1) Brick construction with stone foundation.

(2) Front porch and balcony.

(3) Six over six pane sash windows.

(4) Symmetrical west and south facades.
(5) Brackets under roof and porch eaves.
(6) Vertical brick detail - belt course and above foundation.
(7) Fluted porch columns.
(8) dormers (west and south facades) - decorative glass and pilasters.
(9) Decorative chimneys - east side.
(10) Shallow arch lintels under flat segmented arch.
(11) West (side) entry - single door with side and top lights.
(12) South entry - separated single doors, fluted pilasters, decorative lintel.

1206 Park Place --- Edward and Matilda Menke residence - significant features:
(1) Brick construction with stone foundation.
(2) Front corner porch and balcony.
(3) Front dormers - shingled sunburst carving.
(4) West shingled gable and chimney.
(5) East round turret.
(6) East & west decorative chimneys, brickwork, molded corners, stone detail.
(7) One over one sash windows.
(8) Double door with transom window.
(9) Carved stone panels - lintels of parlor facade window.
(10) Quoined stone detail along windows.
(11) Brick work - frieze, lintel.
(12) Stone bands - under frieze (second story lintel level), along sills of second story windows, along lintels of first story windows.
(13) Quarter circle windows - west gable.
(14) Arch window on west side - stone lintel and sill.
(15) Stained glass transom windows - facade windows.

1214 Park Place --- John Flynn residence - significant features:
(1) Stone and brick construction with a stone foundation.
(2) Romanesque arch entry to front porch.
(3) Front balcony - stone "rail" detail.
(4) Front corner turret - hex shape, stone work in frieze.
(5) East and west gables.
(6) Two story angular bay on east side - dentils.
(7) Two story square bay on west side - dormer above.
(8) One over one sash windows.
(9) Double door entry - beveled glass windows.
(10) Stained glass transoms - entry, center facade turret windows, parlor window, west center bay window, east first story bay window.
(11) Stained glass windows - large, arch window - west, small first story window - west side.
(12) Multipane over single pane windows - front dormer, gables.
(13) Brackets and dentils along roof eaves and porch roof.
(14) Balcony door - flat stone arch lintel.
(15) Flat brick arch lintels.
(16) Shallow arch lintels under flat segmented arch – first floor of west side.

1215 Park Place --- William and Hattie Shinn residence - significant features:

(1) Brick construction with stone foundation.
(2) Front porch and balcony.
(3) West and facade hip roof gables.
(4) East gable dormer and chimney.
(5) Two story angular bay on east aide.
(6) One over one sash windows.
(7) Double door entry with decorative glass.
(8) Dormer windows - decorative sash over single sash.
(9) Stained glass transom windows - entry, parlor window.
(10) Brickwork - below frieze, molded corners.
(11) Brackets under roof eaves.
(12) Shallow arch lintels under flat segmented brick arch.

1217 Park Place --- Henry and Augusta Pfeiffer - significant features:

(1) Brick construction with stone foundation.
(2) Partial front porch with carved pediment.
(3) Facade and west gables - shingled.
(4) Facade dormer - shingled.
(5) Round turret with conical roof on east side.
(6) One over one sash windows.
(7) Double door entry.
(8) Pilastered, decorative chimney on east and west.
(9) Chimney in west gable - quarter circle windows in gable.
(10) Square bay on west side - arch window with springstone arch.
(11) Brickwork - frieze, west square bay, belt course on turret.
(12) Stone detail - carved flared flat arch on main first floor window, band along second story facade window lintels.
(13) Stained glass transom windows - entry, first floor facade windows.
(14) Multipane sash facade gable and dormer windows.
(15) Shallow arch lintel under flat segmented arch - carved on west side.

1219 Park Place --- Mary Lesem residence - significant features:

(1) Brick construction with stone foundation.
(2) Partial front porch.
(3) Facade and side gables.
(4) Conical roof on south west corner.
(5) Brickwork - molded corners, window lintels.
(6) West gable - multipaned window.
(7) One over one sash windows.
(8) Single door entry.
(9) Transom windows - entry, parlor window.
(10) Shallow carved arch lintels under flat segmented brick arch - facade and most of east side.
(11) Brick relieving arch lintels west and some east sides.
(12) Queen Anne style windows - left side of upper facade.

(13) Pilastered chimney with molded corner on east side.
(14) First story bay with brick arch over entire bay - east side.

1220 Park Place --- Anton Binkert residence - significant features:
(1) Brick construction with stone foundation.
(2) Partial front porch.
(3) Jenkin head dormers - two on facade, one on east and west.
(4) Square/angular bay on east side.
(5) Facade angular bay.
(6) One over one sash windows.
(7) Double door entry.
(8) East chimney and west pilastered chimney.
(9) Eastlake decoration - rosettes, bands, circles. etc.
(10) Cornice/frieze with corbeled racketing and decorative detail.
(11) Decorative window lintels with shoulders.
(12) Stone band around facade bay, second story sill and first story lintel level.
(13) Stained glass transom windows - center windows on facade bay, entry, parlor window.
(14) Brick relieving arch lintels.

1221 Park Place --- Henry Bastert residence, John Duker residence - significant features:
(1) Brick construction and stone foundation.
(2) Front porch.
(3) Facade gable - shingled - Queen Anne windows.
(4) West gable - sided - multipane windows.
(5) Facade gable dormer - multipane window.
(6) Carved pediment detail on facade gable and dormer.
(7) Two story angular bay with zipper corners and tent roof on east side - stone belt course, brickwork.
(8) One over one sash windows.
(9) Double door entry.
(10) Brickwork - two bands on the frieze, one between vertical brick window lintels, molded corners.
(11) Decorative pilastered chimney on west side.
(12) Pair of arch windows on facade with brick arches.
(13) Stone lintel of triple upper facade windows.
(14) Scrollwork on facade sills.
(15) Stained glass transom windows - entry, parlor window.
(16) West side - decorative panel series including multipane window, carved panel, stained glass transom.

1224 Park Place --- August R. Dorkenwald residence - significant features:
(1) Brick construction with stone foundation.
(2) Partial front porch.
(3) Angular bay with zipper corners - east side - arch window.
(4) Hip roof dormer with Venetian window - west side.

(5) Multipane sash over single sash windows.
(6) One over one sash windows - rear of sides.
(7) Double door entry.
(8) Pilastered chimney - east side.
(9) Greek Revival porch columns, lathe turned balustrade.
(10) Brick work - lintels and between facade windows, frieze.
(11) Decorative glass transom windows - parlor window.
(12) Decorative windows - half circle window, arch window east side.
(13) Shallow arch lintels under flat segmented brick arch.
(14) Square bay on west side - arch window with stone and wood detail and decorative half circle panel.

1225 Park Place --- Andrew Burman residence, Clement Bush residence - significant features:
(1) Brick construction with stone foundation.
(2) Front porch.
(3) Facade hip roof dormer - multipane windows.
(4) East and west gables - siding.
(5) Oriel window on west side - decorative glass transom window.
(6) Two story angular bay with zipper corners - east side.
(7) Rectangular porch windows.
(8) One over one sash windows.
(9) Chimney - east side.
(10) Chimney through gable - west side.
(11) Brickwork - frieze, "Quoined" detail around windows on facade and front windows of the east and west sides.
(12) Dentils along facade gable, eaves, and porch roof.
(13) Flat brick arch lintels.
(14) Decorative glass transom windows - entry, parlor window.
(15) Round window - west side.
(16) Geometric detailing on porch.

1229 Park Place --- Llewellyn and Anna McKenna residence, Fred Schultheis residence - significant features:
(1) Brick construction with stone foundation.
(2) Front porch.
(3) Facade and side gables - siding.
(4) Round two story bay with conical roof - east side.
(5) Multipane sash over single pane sash windows.
(6) Single door entry.
(7) Palladian windows - front and west gable.
(8) Pilastered chimney - east side.
(9) Quoined brick corners.
(10) Brickwork - flat brick arch lintel with keystone.
(11) Dentils - roof cornice, main gable window, oriel window, palladian windows.
(12) Decorative panel lintels, parlor window, front first floor east side window.

(13) Carved detail - entry, palladian windows, oriel window, facade gable.
(14) Decorative glass sidelights - entry.
(15) Oriel window - west side.

1230 Park Place --- Jason and Maria Simons residence - significant features:
(1) Brick construction with stone foundation.
(2) Gables on each side.
(3) One story bay - west side.
(4) Pilastered decorative chimney - east side.
(5) One over one sash windows.
(6) Facade gable detail - rounded corners back to recessed window, round peak above window.
(7) East gable detail - round peak above window.
(8) Curved cornice under facade gable.
(9) Brickwork - frieze, belt course, under facade rectangular window, molded corners, panel - west side, above foundation.
(10) Flat brick arch lintels.
(11) Carved sills.
(12) Single door entry.
(13) Transom window - entry.
(14) Stained glass transom window - parlor window.
(15) Stained glass rectangular window - facade.
(16) Facade gable window - three pane sash over single pane sash.
(17) Palladian window - east side (partially replaced).
(18) Arch windows with brick relieving arches - east side.
(19) Carved porch "columns".

1233 Park Place --- Joseph and Emma Lubbe residence - significant features:
(1) Brick construction with stone foundation.
(2) Front porch.
(3) Angular bay with chimney and gable - west side.
(4) One over one sash windows.
(5) Double door entry.
(6) Pilastered chimney - east side.
(7) Round turret - brickwork, continuous stone sills - east side.
(8) Brickwork - frieze, belt course.
(9) Brackets - roof line along balcony.
(10) Front dormer - set of three windows, pilasters.
(11) Decorative glass transom windows - entry, first floor facade windows, front first story window - east and west sides.
(12) Arch window - brick relieving arch lintel, decorative glass in semicircle west side.
(13) Fan decoration - west gable.

1237 Park Place --- William and Elizabeth Krewet residence - significant features:
(1) Brick construction with stone foundation.
(2) Front porch - decorative columns.

(3) Balcony rail above porch.
(4) Facade and east gables - siding.
(5) Gable dormer - west side.
(6) Two story angular bay - continuous stone sills - east side.
(7) Double door entry.
(8) Dentils - roof and porch eaves.
(9) Decorative sash over single sash windows - facade gable.
(10) Multipane sash over single pane sash windows - west gable dormer, east gable.
(11) Curved bay - right side of facade on first and second story.
(12) Transom windows - second story of front bay.
(13) Decorative glass transom window - middle first story bay window - east side, first story facade windows, entry, west arch window.
(14) Pilasters - left second story facade window, arch window - west side.
(15) Decorative pilastered chimney - west and east sides.
(16) One over one sash windows.
(17) Arch window - brick relieving arch with keystone detail - west side.

1240 Park Place --- William and Kate Campbell residence, George Binkert residence - significant features:
(1) Brick construction with stone foundation.
(2) Front porch.
(3) Facade and east gables - half timbered.
(4) One story angular bay - east side - small brackets.
(5) Two story bay - west side - molded corners.
(6) Facade dormer - curved roof, decorative windows.
(7) One over one sash windows.
(8) Double door entry.
(9) Brickwork - double band on frieze, belt course, west bay.
(10) Flat brick arch lintels.
(11) Multipane sash over single pane sash gable windows.
(12) Decorative sash over single sash second story facade window (right side).
(13) Transom windows - entry, first floor facade window.
(14) Stained glass transom window - parlor window.
(15) Chimney - stone detail, molded corners - east side.
(16) Round window - brick arch, molded brick detail - west side bay.

1241 Park Place --- Catherine Lubbe residence (Bernard) - significant features:
(1) Brick construction with stone foundation.
(2) Front porch - square columns.
(3) Dormer - sided - west and east sides.
(4) Facade dormer - brick - arch window.
(5) Two story angular bay with zipper corners - east side.
(6) Single door entry.
(7) One over one sash windows.
(8) Pilastered chimneys - east and west sides.
(9) West entry, roof, and brackets.

(10) Overhanging eaves.
(11) Flat brick arch lintels.
(12) Leaded decorative glass - double windows on middle of second story facade, first floor windows around chimney on east side (second one covered by frosted pane), middle windows in bay.

1244 Park Place --- Thomas and Edith Binkert residence - significant features:
(1) Brick construction with stone foundation.
(2) Front porch - carved pediment, spindlework.
(3) Facade and east gable - half timbered.
(4) One story angular bay with dentils - east side.
(5) Rounded northwest corner - half timbered corner gable, curved window.
(6) One over one sash windows.
(7) Single door entry with transom window.
(8) Chimney - molded corners, stone detail- east side.
(9) Brickwork - frieze. between facade windows on west.
(10) Shallow arch carved lintels under flat segmented arch.
(11) Stained glass transom windows - first floor facade windows (including curved corner window).
(12) Pilastered "chimney" (no top) - molded corners - west side.

1248 Park Place --- Henry and Emma Borstadt residence - significant features:
(1) Brick construction with stone foundation.
(2) One story angular bay - east side.
(3) Left side of upper facade and left facade gable.
(4) One over one sash windows.
(5) Pilastered chimneys - molded corners, stone detail - east side.
(6) Pilastered chimney - molded corners - west side.
(7) Brickwork - frieze.
(8) Carved shallow arch lintel under flat segmented brick arch.

1253 Park Place --- John and Emelie Meyer residence - significant features:
(1) Brick construction with stone foundation.
(2) Partial front porch - decorative columns.
(3) Facade and side gables - decorative shingles.
(4) Two story angular bay - east side.
(5) One over one sash windows.
(6) Double door entry.
(7) Chimney - east side.
(8) Brickwork - belt course, above and below first story lintels, below arch window - west side.
(9) Flat brick arch lintels.
(10) Stained glass transom windows - entry, first floor facade windows, arch window (west side).
(11) Multipane window - facade gable dormer.
(12) Facade gable windows - sides and narrow rectangular middle.
(13) West gable - triple multipaned windows, eyebrow roof.

(14) Arch window - stained glass transom window, carved semicircle - west side.

(15) East gable - triple multipane sashes over single sash.

(16) Dentils - roof, porch, facade dormer.

(17) Pilasters - facade window of left side of second story.

1254 Park Place --- Frank and Rose Dick residence - significant features:

(1) Buff brick construction with stone foundation.

(2) Front porch - brackets, "tapered" columns.

(3) Square rail - porch, balcony.

(4) Dormers on each side - multipane windows.

(5) Multipane (usually six) over single pane sash windows.

(6) Single door entry - side and top lights.

(7) Chimney - east and west sides.

(8) Stone band detail - over and between second story windows (including lintels).

(9) Flat brick arch lintels, stone sills - first floor windows.

1260 Park Place --- Fred and Maude Moller residence - significant features:

(1) Brick construction with stone foundation.

(2) Front porch.

(3) East and west large gables - brick.

(4) Front and east gables - half timbered.

(5) Two story bay with zipper corners - facade and east.

(6) Oriel window - west side.

(7) One over one sash windows.

(8) Single door entry - side and top lights.

(9) Pilastered chimney - east side.

(10) Shallow arch lintels under flat segmented brick arch.

(11) Facade dormer - Tudor arch, decorative glass.

(12) Quatrefoil detail - facade dormer, oriel window.

(13) Tudor arch windows with brick relieving arch lintels - top of east and west gables.

(14) Gable roof detail - west side.

1261 Park Place --- George and Elizabeth Ertel residence - significant features:

(1) Brick construction with stone foundation.

(2) Two story angular bay with pilastered chimney - shingled gable - east and west side.

(3) East chimney - molded corners.

(4) Hip roof dormer - east and west sides.

(5) Facade gable - shingles - decorative window.

(6) One over one sash windows.

(7) Brackets and dentils along roof line.

(8) Brickwork - frieze, molded corners.

(9) Carved stone band detail - facade second story window lintels.

(10) Carved shallow arch lintel under flat segmented brick arch.

(11) Multipaned sash over single sash dormer window - east and west sides.

1269 Park Place --- George and Maude Jasper residence - significant features:

(1) Front porch.
(2) Facade and side gables - shingled.
(3) Two story angular bay and balcony - east side.
(4) One over one sash windows.
(5) Double door entry.
(6) Pilastered chimneys with stone detail - east and west sides.
(7) Scrollwork - lintels, porch pediment, chimneys, front lintel band on second story (right side).
(8) Multipaned gable windows - facade.
(9) Pilasters - second floor facade windows.
(10) Stained glass transom windows - entry, first floor facade, middle windows of east bay.
(11) Brackets under roof eaves.
(12) Front gable - shingled, dentils, carved around window.

1270 Park Place --- Mary Wewers residence - significant features:

(1) Brick construction with stone foundation.
(2) Front porch and balcony.
(3) Dormers on each side.
(4) Chimneys - west and east sides.
(5) Brackets - roof, porch, dormers.
(6) Single door entry - stained glass toplights and sidelights.
(7) Overhanging eaves.
(8) Multipane sash in gable windows.
(9) Geometric detailing - brick by facade windows, porch columns, window panes.
(10) Multipane sash over single sash windows.
(11) Stone band detail - level of second story window sills.
(12) East porch and balcony.
(13) Stained glass windows - west side.

29.1069 Designation of 1037 South 16th Street --- That 1037 South 16th Street, Quincy, Illinois is hereby designated a Landmark.

That the legal description of 1037 South 16th Street is as follows:

NW of lot 12, Township 2S, Range 9W, NE corner of Monroe and 16th Streets, north 80 feet, east 212 3/4 feet, south 80 feet, west 212 3/4 feet part of NW12.

That the Historical Name of the house is the Henry Bauch Residence.

That the vernacular type of the house is double-pen.

That the Date of Construction is 1892.

That the Architect or Builder is unknown.

That among the architectural features, which will be provided protection are as follows:

(1) Brick construction with a stone foundation.
(2) Symmetrical facade - two entry doors, two first floor windows, two dormers.

(3) Four pane over four pane sash windows with brick relieving arch lintels and stone sills.

(4) Chimney at north and south ends.

(5) Basement windows with brick relieving arch lintels.

(6) Gable roof dormers - four pane over four pane windows - siding - carved gable detail.

That the historical significance of 1037 South 16th Street is as follows:

The Henry Bauch house is significant for its early American style of architecture. Though not constructed until 1892, this house is built in the double pen form found throughout the country in the early 1800s. It remains one of the best examples of historic vernacular architecture in this neighborhood The house is constructed of brick with a stone foundation. It is two rooms wide with a dividing wall between the two areas and chimney and front door access to both areas. The upper story consists of an additional room on each side with a front dormer. There is basement under the house.

The west facade is completely symmetrical. The new front porch, replacing an original, spans the middle half of the facade. Both front entry doors are accessed through this porch. The left door no longer provides interior access. The doors have small windows and a transom window. On each side of the porch is a four pane over four pane sash window with a brick relieving arch lintel and stone sill. The two gable dormers have siding and double four over four sash windows. The gable area's carved detail has been restored, and the porch detail has been carefully designed to resemble the detail on these dormers. To the north and south of the porch are basement windows with brick relieving arch lintels.

Both the north and south sides are identical, though reversed. The first floor windows on each side are patterned with one window in the front and a pair of windows in the rear portion. The upper story has two windows, one on each side of the chimneys. The chimneys are recessed within the exterior walls, and above the roof line they are constructed of a different brick than the rest of the house. Each of the windows is a four pane over four pane sash with a brick relieving arch lintel. Below each of the rear pair of windows is a basement window, also with a brick relieving arch lintel. An addition was built to the rear of the house in the mid-1990s. This addition is sided and has the four pane window sashes. The original rear facade featured two doors that provided access to each side of the home.

Henry Bauch was a gardener and retired when he lived in this house with his wife Julia. He bought the land in 1890, but no construction took place until 1892. The house has been called the Henry Arnsman in some sources, through this cabinetmaker has no apparent connection to the house. After Bauch's death in 1902, the house was sold and several families resided here. Ernest Sturhahn and the Amos Curfman family were the longest residents. It sat vacant for several years before the Ervins purchased it.

29.1070 **<u>Designation of 701 Hampshire Street</u>** --- That 701 Hampshire Street, Quincy. Illinois is hereby designated a Landmark.

That the legal description of 701 Hampshire Street is as follows:

Pricketts survey lots 9, 10, 11. 1 . 13 and west half of 14 Block 14.

That the Historical Name of the church is St. John's Episcopal Church.

That the Style of the church is Early Gothic Revival.

That the Date of Construction is 1853.

That the Architect or Builder is Charles Howard.

That among the architectural features which will be provided protection are as follows:

(1) Native uncoursed limestone.

(2) Tiffany windows - round resurrection window and regular annunciation window.

(3) Diamond jubilee window - Mayer and Company.

(4) Pointed arch stained glass side windows.

(5) Pilastered stone details - between side windows.

(6) Bell tower (south side) with top corner towers.

(7) West chancel round stained glass windows.

(8) Corner towers.

That the historical significance of 701 Hampshire Street is as follows:

St. John's Episcopal Church is significant for several reasons. The architecture is a good example of early gothic revival architecture from the 19th century. The original church structure is significant as the oldest church building in Quincy. The church is historically significant as the first Episcopal church body in Quincy and the first cathedral of the new diocese of Quincy. It is listed as a significant structure to the Quincy downtown district of the National Register of Historic Places.

Architectural Significance::

In September of 1852, the church decided to hire Charles Howland, architect and builder from Middleborough, Massachusetts, to construct their new church. This original portion of the church, now the nave and bell tower, is the oldest church building remaining in Quincy. He designed the 70 x 40 foot structure in the early gothic revival style, following the English perpendicular form, using native uncoursed limestone. When the church became too small for the congregation, they hired Howland again in 1866 to design an addition on the north side consisting of the transepts and chancel, completing the cruciform plan. The need for a chapel, office, and lecture room led them to hire Quincy architect Robert Bunce to design the addition along the north side in 1879. At this time, an eleven bell set, Quincy's only true carillon, was given by Theresa Woodruff and installed in the tower. Each of these early modifications followed the gothic revival style, popular throughout the country for church buildings, and continued the use of native limestone.

The interior of the church was extensively remodeled in the 1950s, but some of the original features rein. The Newcomb Memorial Reredos was designed by Ralph Cramm in 1907, and Johannes Oertel did the painting. This altar had an honorable place among the six American altars listed in the Notable Altars of England and America.

In the west aisle of the nave, two windows were added in 1914. The diamond jubilee window depicting St. John was made by Mayer and Company of Munich and New York. Next to it at the north end of the west aisle, the window of the annunciation was designed and constructed by the Tiffany Studios. They are also responsible for the round window depicting the annunciation added in 1924 with the altar and paneling the west transept.

The addition of the education wing to the east in 1957 and the extension of the wing in 1970 were constructed of limestone from the foundations of old buildings along Hampshire Street to match the original church. The 1879 addition was gutted by a fire in 1985 and remodeled. Many of the stained glass windows in the church were replaced in 1987 for the sesquicentennial celebration. None of these changes or additions are included in this designation. The spires on the original church were removed at a very early date. In

the middle of the 20th century, the east dormers of the original church and the second story stained glass windows in the bell tower were removed.

Historical Significance - Episcopal Church Heritage:

On Easter, March 26, 1837, Bishop Chase arrived in Quincy to officiate the first Episcopal service at St John's. The first church was completed on December 31, 1837, and when it was formally consecrated on June 24, 1838 it was the fourth Episcopal church in Illinois. As the congregation grew along with Quincy throughout the 1840s, it chose the site at Seventh and Hampshire for the new church building. In 1852, Charles Howland was hired to design and build the present church. This church is the oldest church building in Quincy, and the church body is the first Episcopal congregation in Quincy. Additions were added in 1866 and 1879 as the church continued to grow. A second parish, the Church of Good Shepherd, was officially chartered in 1871.

In October of 1877, the general convention of the Episcopal church authorized the creation of two new dioceses in Illinois. The west portion was included in the Quincy diocese, with Quincy as the see city. The newly consecrated Bishop, Rev. Alexander Burgess, served in Quincy at St. John's which became the cathedral of the diocese. The church structure changed to accommodate this new role as the pastor become the dean of the cathedral. This arrangement continued until 1962 when the bishop moved to Peoria due to a shift in the population distribution of the diocese.

Throughout this period, many changes and modifications were made to the interior of the church, including the installation of the Reredos, stained glass windows, and overall remodeling. In 1957, the Church of the Good Shepherd merged with St. John's congregation. The church continues to occupy a dominant place in the Episcopal community of Quincy.

29.1071 <u>Designation of 1009 North 8th Street</u> --- That 1009 North 8th Street, Quincy, Illinois is hereby designated a Landmark.

That the legal description of 1009 North 8th Street is as follows:

Tillson Survey, Block 5, Lots 5, 6, 7 and 8.

That the Historical name of the church is St. Rose of Lima Roman Catholic Church.

That the Style of the church is Venetian Gothic Revival.

That the Date of Construction is 1911-1912.

That the Architect or Builder is George P. Behrensmeyer.

That among the architectural features which will be provided protection are as follows:

(1) pale yellow brick construction.
(2) rough cut stone foundation with smooth top course.
(3) smooth stone water table.
(4) stone belt courses.
(5) pointed arch windows.
(6) arch windows.
(7) metal gutters and decorative downspouts.
(8) buttress arch columns.
(9) three large arched stained glass windows.
(10) sets of three arched stained glass windows on the sides, center with rose window top.

(11) main east entry - double doors, brick arch, crenellated detailing, columns, stone base, stained glass.

(12) side entries - single door, brick arches, crenellated detailing, columns, stone crosses, stained glass.

(13) basement windows.

(14) bell tower - southeast corner.

(15) Celtic gold cross.

(16) Baptistery - northeast corner.

(17) stone detailing around first story windows on east side.

(18) brick detailing around windows on west side.

(19) engaged brick columns.

(20) finials.

That the historical significance of 1009 North 8th Street is as follows:

St. Rose of Lima Roman Catholic Church is significant for its architectural design. In addition, it has stood as a prominent landmark on the north side of town for the majority of the 20th century.

Architectural Significance:

St. Rose of Lima Roman Catholic Church is a mixture of architectural styles and features, best described as Venetian Gothic Revival. It was designed in 1911 by George Behrensmeyer, a prominent Quincy architect. St. Rose of Lima is aligned east to west with the main entry opening on the east. The interior layout is cruciform. The pale yellow brick of the church is unusual for Quincy, but it can be found in other Behrensmeyer designs. The foundation is rough cut limestone with a smooth course on top. A smooth cut stone water table wraps the structure below the sills of the first floor windows. Two Bedford stone belt courses run above the first floor elements, one straight course and the other emphasizing the openings. The iron cornices, gutters, and downspouts are decorative and a pale yellow to blend in with the brick.

Prominent Landmark - History of the Church:

For over a century, the St. Rose of Lima of All Saints Parish has served the Catholics of Quincy's north side. The current structure is the second building to serve this parish, which was founded by Father John Brennan. In 1892, the first church was built at the northwest corner of 8th and Cherry. As the parish grew larger year by year, the parish determined they needed a larger building. On May 7, 1911, they held the cornerstone laying ceremony, complete with a Catholic parade and three to five thousand spectators. A time capsule with mementos of the day was sealed within the cornerstone. On June 2, 1912, the church celebrated the High Mass of Dedication. Several important community and Catholic leaders were present, including the architect, George Behrensmeyer, a close friend of Father Brennan, who received many compliments on his design. The organ, installed at this time, is now the only one of its kind left in Quincy. It is a 1912 Wicks Number 56, a 16 rank tubular-pneumatic with 914 pipes.

For 89 years, the current building for St. Rose of Lima of All Saints Parish has stood as a prominent landmark at the corner of Chestnut and 8th Street. It has served an increasingly diversified congregation, drawing from the changing demographics of the surrounding neighborhood as well as other areas of town where members of the congregation have moved. A prominent structure built on a high elevation, it is well known in the neighborhood and throughout Quincy.

29.1072 **<u>Designation of 1843 Grove Street</u>** --- That 1843 Grove Street, Quincy, Illinois is hereby designated a Landmark.

That the legal description of 1843 Grove Street is as follows:

Goodman's Survey, West 125 feet of East 338 feet, North half of Block 1.

That the Historical name of the house is the Ernest Wood House.

That the Style of the house is Shingle/Queen Anne.

That the Date of Construction is 1897.

That the Architect or Builder is Ernest Wood.

That among the architectural features which will be provided protection are as follows:

(1) original shingled form and shingled additions.
(2) gables with circular shingled detail and sets of double brackets.
(3) shingled porch with decorative brackets.
(4) Prairie School stained glass windows.
(5) three chimneys.
(6) double hung windows and openings.
(7) window openings in sets.
(8) windows with side light and transoms.

That the historical significance of 1843 Grove Street is as follows:

The Ernest M. Wood Residence at 1843 Grove Avenue is significant for its architectural style and association with a significant person. The house is a unique example of a shingled Queen Anne style house. It was designed by Ernest Wood, a prominent Quincy architect and served as his primary residence. As is typical with architect's residences, Wood modified and added to the original design as he experimented with new styles. The Ernest M. Wood Residence is listed as a significant structure in the East End National Register Historic District.

Architectural Significance:

The Ernest Wood Residence is architecturally significant. The main portion of the house was constructed in 1897 in the Shingle/Queen Anne style. Significant additions were made by Wood at two later times. The first additions and modifications were made by Wood probably around 1907, adding a Prairie School flavor to the house. These include the front porch and one story wings on each side of the front of the house. The one story addition in the rear appears to have been added at a later date, probably around 1915. It is possible the porch was actually added on at this time also. Another one story addition was made in the late 1990s and although it is sympathetic to the structure, it is not historic. The resulting form of the house is the original rectangular form with a front porch, two one story additions on the west side, a one story addition on the east side, and a one story addition on the north (rear) side.

Significant Person:

Ernest Michael Wood has been recognized both as a significant architect in Quincy and a significant Prairie School architect in the Midwest. He was born on June 17, 1863 in Quincy and died on January 25, 1956 after living a full and productive life in Quincy

At the age of 23, Wood decided to enter the architectural field by the standard method of an apprenticeship with an architect. In 1886, he began work with architect Harvey Chatten, a well established Quincy architect. Throughout the next five years, he

worked closely with Chatten on several designs and drafted the majority of Chatten's drawings.

By 1981 Ernest Wood established his own practice. His early designs reflect the popular eclectic and revival styles of the late 19th century that Chatten also followed. He constructed his residence during this period, according to these trends. Around the turn of the century, Wood became familiar with the new Prairie Style of Frank Lloyd Wright and elements of the style began to influence his work by 1905. His most important designs, including that for his own office, date to these first decades of the 20th century. Modifications adding Prairie School elements to his home appear at this time. Ernest Wood's work in the Prairie School style helped to spread the influence of Frank Lloyd Wright and the Prairie Style throughout the region.

The house is listed as a contributing structure in the East End National Register Historic District.

29.1073 <u>Designation of 210 South 18th Street</u> --- That 210 South 18th Street, Quincy, Illinois is hereby designated a Landmark.

That the legal description of 210 South 18th Street is as follows:

Nevin's Survey, South 50.5 feet of South 130.5 feet of East 124 feet of lots 42 and 43.

That the Historical name of the house is the Joanna Wallace House.

That the Style of the house is the Eclectic/Gothic Revival.

That the Date of Construction is 1883.

That the Architect or Builder is unknown.

That among the architectural features which will be provided protection are as follows:

(1) frame construction with stone foundation.
(2) cross gable roof form, gables on all four sides.
(3) wooden shingles and siding.
(4) decorated vergeboards.
(5) porch with square columns and balustrade.
(6) bay window on porch (east side).
(7) parlor window with stained glass transom window (east side).
(8) decorative chimney, including stained glass window, brickwork, etc.
(9) second story northeast corner porch with decorative circles.
(10) four over four pane window sashes.
(11) double hung one over one windows.
(12) basement windows and molding.

That the historical significance of 210 South 18th Street is as follows:

The Joanna Wallace Residence is significant for its architectural style. At a time when it was common in Quincy to build large brick Queen Anne style homes, this house was constructed in a simpler eclectic Gothic Revival style. The overall form of the house is a cross gable. The house currently has three different wall treatments. Shingle siding dates to the earliest period and exist on the upper portion of the east gable, second story and gable on the north side, and peak of the gable on the south side. The vertical board and batten siding exists on the remainder of the front gable, second story of the south side, and second story of the west side. The other walls are clad in narrow horizontal siding. The foundation is rough limestone with few windows. It is exposed on all sides except for the

rear addition. Two chimneys remain, one in the center of the house and one on the north side.

The Joanna R. Wallace Residence at 210 South 18th Street is listed as a contributing structure on the East End National Register Historic District.

29.1074 <u>Designation of 1479 Hampshire Street</u> --- That 1479 Hampshire Street, Quincy, Illinois is hereby designated a Landmark.

That the legal description of 1479 Hampshire is as follows:

Nevin's.

That the Historical name of the building is Unitarian Church of Quincy.

That the Style of the building is Tudor.

That the Date of Construction is c. 1913.

That the Architect or Builder is Harvey Chatten.

That among the architectural features which will be provided protection are as follows:

(1) ashlar block, stucco/half timber construction.
(2) southwest tower with tent roof.
(3) painted glass windows.
(4) cross brace detail on entry roof area.
(5) X half timber detail on front gable.
(6) south painted glass window - road to Jerusalem.
(7) north painted glass window - Indian Mounds Park.
(8) east painted glass windows- Mayflower Compact, Penn & Delawares.
(9) flat row of voussoirs above windows and doors on stone sections.

That the historical significance of 1479 Hampshire Street is as follows:

The Unitarian Church is significant in several respects. The Tudor style this church follows is the original design and detailing, a style which is uncommon in the churches of Quincy. This church follows the general layout of the Unitarian church body. It was also one of Harvey Chatten's last projects in Quincy. The Unitarian Church is historically significant in the Unitarian Church heritage. It was one of the first three church bodies in Quincy, and the third congregation of its kind in Illinois. W.G. Eliot, a dominant figure both inside and outside the church, began this church body in Quincy. It is listed as a significant structure in the Quincy East End Historic District of the National Register of Historic Places.

Architectural Significance:

In 1911, the Unitarian Church hired Harvey Chatten, a dominant architect in Quincy at the turn of the century, to design an addition to their current church. After a few years, they decided to sell the old building and build a new structure at Hampshire and 14th Streets. On February 5,1914, the church was dedicated and has been used continuously since then. The Tudor building is a combination of ashlar blocks and stucco with half timbering. The windows are all painted glass rather than stained glass. The entry area rises up into the front tower under the tent roof. Behind this area, the east side is spanned by the Heritage Room, ending in the parlor tower in the rear. The rest of the building, beyond the strip on the east side, is the meeting room. This design follows the common plan of Unitarian churches throughout the Midwest.

Historical Significance - Unitarian Church heritage

The Unitarian Church was officially organized in America in 1825. Throughout their history, they have been associated with the Congregational Church in one aspect or another. On May 31, 1839, after four years of meeting with interested people in Quincy, W.G. Eliot delivered the first sermon of official Second Congregational Church in Quincy. They constructed their first church on Maine Street the following year, distinguishing them as one of Quincy's oldest church bodies and the third oldest Unitarian group in Illinois. As the church grew, they moved to their second meeting house on Jersey Street in 1850 and to their elaborate third meeting house further out on Maine Street in 1858. At the time of its completion, this third meeting house was the largest Protestant church building in Quincy. A Sunday school was added in 1868. Throughout these changes of location, the name also changed to the Second Congregational Unitarian Church, then shortened to the Unitarian Church. A number of these early ministers were recognized nationally for their intellectual and moral leadership.

In 1911, they determined the third meeting house did not meet their needs any longer. They hired Harvey Chatten to remodel this building, but a department store owner offered the church $31,250 which paid for the new lot, building, furnishings, and a new parsonage and still left $2000 in their account. On February 5, 1914, the fourth meeting house, the current Unitarian Church, was dedicated.

29.1075 **<u>Designation of 425 Hampshire Street</u>** --- That 425 Hampshire Street, Quincy, Illinois is hereby designated a Landmark.

That the legal description of 425 Hampshire Street is as follows:

Quincy Survey East 34 ft. Lot 7, West 49.9 feet Lot 8.

That the Historical name of the building is the Washington Theater.

That the Style of the building is Mediterranean Revival.

That the Date of Construction is 1924.

That the Architect or Builder is E.P. Rupert.

That among the architectural features which will be provided protection are as follows:

(1) glazed terra cotta trim.

(2) large round terra cotta arch with a terra cotta full-relief sculptured head.

(3) ornate terra cotta belt course.

(4) second story one over one windows with semi-elliptical arches.

(5) terra cotta pilasters frame the theater entrance and double terra cotta pilasters found between the upper story windows.

(6) decorative terra cotta bosses located within the cornice above the pilasters.

(7) brick pilasters separating the bays of the storefront.

That the historical significance of 425 Hampshire Street is as follows:

The Washington Theater was constructed as a movie and performing house in 1924. In 1928 it was the site of the first talking motion picture and ushered in new film technology until its closure in 1982. The theater has been described as the only strong 1920's period piece in the downtown and is the only Mediterranean Revival building within the downtown.

The theater is listed as a contributing structure in the Downtown Historic District on the National Register of Historic Places.

Architectural Significance:

The exterior is comprised of masonry and features glazed terra cotta trim. A large round terra cotta arch with a terra cotta full-relief sculptured head above the double windows is centered within the round arch and placed within the triangular pediment. An ornate terra cotta belt course is provided above the second story windows and a sill course at the base of those same windows. Second story windows are one over one with semi-elliptical arches. Four windows are located above the theater entrance and double windows are above the traditional storefronts. Terra cotta pilasters frame the theater entrance and double terra cotta pilasters are found between the upper story windows. Decorative terra cotta bosses are located within the cornice above the pilasters. Brick pilasters are found separating the bays of the storefront and are the only unaltered features of the original storefronts.

29.1076 <u>Designation of 421-23 Hampshire Street</u> --- That 421-23 Hampshire Street, Quincy, Illinois is hereby designated a Landmark.

That the legal description of 421-23 Hampshire Street is as follows:

The East 40 feet of the West 65.66 feet of Lot 7, Block 9, Original Block of Quincy.

That the Historical name of the building is the George Schultheis Building.

That the Style of the building is Commercial Italianate.

That the Date of Construction of 421 Hampshire is 1854, and of 423 Hampshire is 1858. Both properties were remodeled together in 1871.

That the Architect of Builder is unknown.

That among the architectural features which will be provided protection are as follows:

(1) ornamental brick dentils located just below the line of the original cornice.
(2) limestone pilasters in the center and on the east corner of the upper stories.
(3) cast iron pilaster on the west corner of the upper stories.
(4) cast iron pilasters on the east and west corners of the first story storefront.
(5) brick and stone sill course found between the second and third stories.
(6) belt course atop the storefront.
(7) window surrounds.

That the historical significance of 421-23 Hampshire Street is as follows:

The Italianate style Schultheis Building has design elements unique to Quincy commercial structures, specifically the Oriental or Moorish influence in window surrounds with incised Eastlake design elements. Interestingly, the western building was constructed in 1854, the eastern building was constructed in 1858, and the two buildings were then remodeled together in 1871 during the post-Civil War rebuilding of Washington Square.

The Schultheis Building is listed as a contributing structure in the Downtown Quincy National Register Historic District.

Architectural Significance:

The three story brick building is a Commercial Italianate structure with the primary facade divided into two three-bay facades. The front facades are ornamented with brick dentils located just below the line of the original cornice (the cornice has been removed), identical limestone pilasters at the center and the east corner of the upper stories, and a cast iron pilaster at the west corner of the upper stories. This cast iron pilaster duplicates the form of the two limestone pilasters, and is intended to suggest stone quoins. Cast iron pilasters accent the east and west corners of the first story storefront. A brick and

stone sill course is found between the second and third stories and a belt course is atop the storefront. The most striking features of these facades are the window surrounds. The central windows on the second and third floors of each three-bay facade have rectangular window surrounds with window openings in an octagonal shape, with an Oriental or Moorish frame. Details incised in the window surrounds are in the Eastlake style. Window surrounds on the remaining upper story windows are octagonal with spindle details at the ends of the surrounds. Historic photos indicate the windows are four over four, even though they are currently covered with plywood. Another interesting feature of the building is that the window surrounds and frames on the west side of the building are cast iron, while the surrounds and frames on the east side are limestone.

29.1077 <u>Designation of 1001-1003 State Street</u> --- That 1001-1003 State Street, Quincy, Illinois is hereby designated a Landmark.

That the legal description of 1001-1003 State Street is as follows:

Wood Survey S 143.33 ft. Lots 11 and 12.

That the historical name of the building is the C.D. Behrensmeyer Store.

That the style of the building includes elements of Queen Anne and Chateauesque.

That the date of construction of is 1881, 1890.

That the architect or builder is unknown.

That among the architectural features which will be provided protection are as follows:

(1) Segmental arched windows.
(2) Large, arched Sullivanesque window above second floor.
(3) Openwork iron cresting along roofline.
(4) Iron balcony.
(5) Dentils.
(6) Carved wooden details above window.
(7) Masonry corbelling along roofline.
(8) Parapet gable.
(9) String course separating first and second floors.
(10) Recessed entries

That the historical significance of 1001-1003 State Street is architectural.

The C. D. Behrensmeyer Store is listed as a contributing structure in the South Side German Historic District.

Architectural Significance

The building exhibits elements of a number of popular Victorian styles. The building's picturesque silhouette, large window area, and carved millwork elements are all typical of Queen Anne construction. However, the masonry construction, steep-sided hipped roof with a flat top, and openwork metal cresting along the roofline all tend toward the Chateauesque. Other stylistic elements include the Italianate segmental-arched windows and the dominant Sullivanesque large arched window.

29.1078 <u>Designation of 125 East Avenue</u> --- That 125 East Avenue, Quincy, Illinois is hereby designated a Landmark.

That the legal description of 125 East Avenue is as follows:

Lawndale Addition, Lots 1 and 2 (beginning 90 ft. S NW corner Lot 1 E to E line Lot 1 E 80 ft. S 10 ft. E 20 ft. S 50 ft. SW 155.5 ft. N to POB pt)

That the historical name of the house is the James and Florence Nielson House.

That the style of the house is Queen Anne.

That the date of construction of is c. 1897.

That the architect or building is Ernest M. Wood.

That among the architectural features which will be provided protection are as follows:

(1) Cedar shingle exterior.
(2) Red stone foundation.
(3) Large front porch with conical roof.
(4) Tuscan porch columns.
(5) Decorative wood trim
(6) Leaded glass in bay window.
(7) Palladian window with Gothic tracery.
(8) Quatrefoil windows on north and west facades.

That the historical significance of 125 East Avenue is architectural.

The James and Florence Nielson House is listed as a contributing resource in the East End National Register of Historic Places District.

Architectural Significance

The Nielson home was the fourth house completed in the Lawndale Addition, located south of Maine Street between 20th and 22nd Streets. Four builders, including Theodore Poling, laid out Lawndale in 1980 with circuitous streets unique in Quincy. Poling and the other builders drew straws to determine which sites and building materials they would use for their mansions. Poling won the drawing and built a Richardsonian Romanesque limestone house at 2016 Jersey. He later built the home at 125 East Avenue for his daughter and son-in-law, Florence and James G. Nielson.

The Nielson house is one of the few Queen Anne style homes designed by architect Ernest Wood. The use of several roof forms, dormers, and porches mark its picturesque form. The architectural details are classical and several of the windows have leaded glass. One of Wood's signature touches is the Gothic influence in the dormer facing Maine Street.

29.1079 <u>Designation of 1621 Vermont Street</u> --- That 1621 Vermont Street, Quincy, Illinois is hereby designated a Landmark.

That the legal description of 1621 Vermont Street is as follows:

Nevins Survey, Lot 10.

That the historical name of the house is the William and Ella Dwire House.

That the style of the house is Queen Anne.

That the date of construction of is c. 1987.

That the architect or builder is Ernest M. Wood.

That among the architectural features which will be provided protection are so follows:

(1) Full-width one-story porch with porte-cochere.
(2) Heavy turned porch supports with solid spandrels.
(3) Front-facing gabled former.
(4) Cutaway bay windows.

(5) Brackets under eaves.
(6) Ribbon windows.
(7) Decorative half-timbering.
(8) Polygonal wooden tower.
(9) Two-story rear porch with arches.
(10) Detailed decorative woodwork.

That the historical significance of 1621 Vermont Street is architectural.

Architectural Significance

Ernest Wood, one of Quincy's preeminent architects, designed the house. It represents the Queen Anne style, and, like many half-timbered examples of this style, it shares a number of characteristics with early Tudor architecture. The building is a two story Queen Anne with an asymmetrical façade featuring a full-width one story front porch and porte-cochere. Its roof is steeply pitched and has a dominant front-facing gabled dormer (common in Queen Anne homes after 1890). The gable has a cutaway bay window, plus a row of three windows and decorative half-timbering. There is a polygonal wooden tower projecting from front of the second story. The porch has heavy turned posts with solid spandrels.

29.1080 <u>Designation of Zwick Row Local Historic District</u> ---

The area is legally described as Lots 22 to 26, Block 2 of Bauhaus Zwick Co. Subdivision and known as 2428 to 2444 College Avenue.

This unique row of Art Moderne single-family homes was designed and built by the Bauhaus-Zwick Construction Company in 1939. The company (still located at 330 S. 9th in Quincy's German Village) was founded in 1919 by German brothers Christian and Louis Zwick and Christian's father-in-law William Bauhaus. Leo Zwick lived in his home at 2428 College for over 50 years (until 1995), and his nephew Lester Zwick (who assisted in the houses' construction) was a longtime occupant of 2444 College. Other notable Art Moderne houses in Quincy are the Chatten House and the Clarence A. Gerdes House, designed by Charles Behrensmeyer in 1938 and 1940, respectively. The properties are in excellent condition with no noticeable alterations. The landscaping is neat and simple, in keeping with the unfussy appearances of the houses.

Each 750 sq. ft. home is on a 46' wide lot and has living/dining room with fireplace, kitchen, two bedrooms, one bathroom, and a finished basement. The houses at 2436 and 2440 College have rear extensions with an additional 200 sq. ft. of living space. The walls are made of 2-1/2" reinforced concrete over a wooden frame and stucco, and the door and window frames are wood. The homes have identical shapes, with the exception of 2428 College. (The same applies to the garages). The flat roofs have a drainage system incorporating downspouts. All of the houses have one-car detached garages that have similar, if simpler, styling and construction with trim colors matching the houses. Notable Art Moderne features of the building include: smooth stucco wall surfaces, flat roofs, asymmetrical facades, little to no ornamentation, horizontal bands of windows, coping at the roofline, and curved surfaces contributing to an overall streamlined appearance. Unique features of the individual buildings are as follows:

2428 College

1. rounded-edge, west-side entrance
2. band of three windows on the north face

3. band of four windows on the west face
4. flat roof line

2432 College

1. rounded projections at the entrance
2. band of three windows on east side of the entrance
3. horizontal picture window on west side of the entrance
4. flat roof line

2436 College

1. coping at the roofline
2. pairs of windows on either side of the entry
3. flat roof line

2440 College

1. fluted fascia and an extended porch
2. coping at the roof line
3. band of three windows on the west side of the entry porch
4. a pair of windows on the east side of entry porch
5. flat roof line

2444 College

1. coping at the roofline
2. horizontal banding above the entrance
3. pairs of windows on either side of the entrance
4. flat roof line

29.1081 <u>Designation of 327 South 12th Street</u> --- That 327 South 12th Street, Quincy, Illinois is hereby designated a Landmark.

That the legal description of 327 South 12th Street is as follows:

Beginning at a point on the south line of the south one-half of the southwest quarter of the northwest quarter of section one (1), township two (2), range nine (9) west of the fourth principal meridian, on the east line of Twelfth Street in the City of Quincy, thence running north on the east line of Twelfth Street forty-five (45) feet distant therefrom one hundred eighty (180) feet to an eighteen (18) foot alley, thence running south on the west line of said alley forty-five (45) feet to the south line aforesaid and thence running west on said south line one hundred eighty (180) feet to the place of beginning, situated in the county of Adams and the State of Illinois.

That the historical name of the building is the Sarah A. Baker House.

That the style of the building is Gothic Revival.

That the date of construction is 1873.

That the architect or builder is Robert Bunce (attributed).

That the architectural features which will be provided protection are as follows:

(1) Modern stained glass fanlight over front entry.
(2) Butternut front doors.
(3) Front façade windows and shutters.
(4) Stone window sills and lintels.

(5) Lancet windows with diamond-shaped panes in front gable-end.
(6) Bay windows on south and east sides.
(7) Steep cross gables.
(9) Detailed scrollwork on vergeboards.
(10) Brick corner quoins.
(11) Elaborate brick corbelling and stepped dentils under eaves.
(12) Clustered, elongated brick chimney.

That the historical significance of 327 South 12th Street is architectural.

This Gothic Revival home was built for Sarah A. Baker and her younger sister Fanny in 1873. According to *Historic Quincy Architecture*, Sarah's mother was the first woman to develop an addition to the city. Neither sister ever married. Both aided soldiers during the Civil War.

The Gothic Revival style was nationally popular from 1830 to 1880. This red brick home features a steeply pitched, cross-gabled roof and moldings over the windows and doors. The west façade has a one-story porch with Eastlake characteristics. The front gable has heavily decorated vergeboards, and the gable end has a set of lancet windows with Gothic detailing. The house is roofed with plain and fish scale-patterned slate shingles. The stained glass fanlight over the double entry doors is in fact a modern addition executed by a son of the present owner. The bay window on the east side was salvaged from a house in Hersman, Illinois owned by the family of the present owners. The National Park Service considered this Gothic Revival cottage to be one of the prime residential examples of the style in the southern part of the state.

The house is attributed to local architect Robert Bunce because of the high quality of its detailing. Bunce was a fine architect and mentor, teaching young apprentices who went on to gain prominence in later years. These include Harvey Chatten, who in turn taught Ernest Wood and Frank Tubbesing.

The Sarah A. Baker House is listed as a contributing structure in the East End National Register Historic District.

29.1082 **<u>Designation of 1443 Maine Street</u>** --- That 1443 Maine Street, Quincy, Illinois is hereby designated a Landmark.

That the legal description of 1443 Maine Street is as follows:

A part of Lot 34 in Nevins Addition to the City of Quincy, County of Adams and State of Illinois, to wit: Beginning at a point on the north line of Maine Street, at the southwest corner of said lot 34 running thence east 83 feet, thence north parallel with the west line of said lot 215 feet more or less to a point 185 feet south from the south line of Hampshire Street, thence west 83 feet to the west line of said lot and thence south to the place of beginning, said above-described premises being commonly known as No. 1443 Maine Street in the City of Quincy situated in the County of Adams in the State of Illinois.

That the historical name of the house is the Tilden Selmes House.

That the style of the house is Italianate.

That the date of construction is circa 1868.

That the architect or builder is unknown.

That the architectural features which will be provided protection are as follows:

(1) Square cupola with rounded windows.
(2) Alternating single and paired decorative scroll brackets under eaves.
(3) Wide frieze band around perimeter of roof.

(4) Tall, narrow windows.
(5) Rectangular stone lintels and sills.
(6) Triple window band in front fable.
(7) Neoclassical porch and front door with transom and sidelights.
(8) Square porch piers.
(9) Corinthian-style dentils.
(10) Balustrade over porch.
(11) Wood bay window.
(12) Wood shutters.

That the historical significance of 1443 Maine Street is personal and architectural.

Tilden Selmes, the original owner, was a merchant who resided here from 1868 to 1879. The house has had a number of historically notable occupants, including Rev. Alexander Burgess, Episcopal Bishop of Quincy (1880 to 1885) and James Bishop, Mayor of Quincy from 1887 to 1891. Rev. Samuel Emery, manager of American Straw Board Co. and pastor of the First Congregational Church, lived here from 1896 until his death in 1906, when his daughter Constance assumed ownership of the house with her husband Alfred Ellis. Ellis, a steam ship agent and Burlington Railroad employee, lived here until 1936 when the house was purchased by Edgar Schaefer, president of the Gardner Denver Company.

The Selmes house is architecturally significant as an example of post Civil War Italianate architecture. Its porch is an early twentieth century neoclassical addition. The building is a 2 ½ story red brick Italianate home with an L-shaped plan and a prominent front gable. The hipped roof has a cross-gable topped by a square cupola with rounded windows. The house's overhanging eaves are supported by alternating single and paired decorative scroll brackets with a wide frieze band. The windows are tall and narrow, with rectangular stone lintels and sills. The first story windows span floor to ceiling, and there is a triple-window band in the front gable. The front gable windows were a late 1800s alteration, replacing an open, rounded-arch breezeway. The front entry has neoclassical details with a transom and sidelights. The porch has square piers and details in the Corinthian style. A balustrade runs the full length of the porch. The original porch occupied the same area but featured smaller-scale supports, as seen in *Quincy Illustrated, 1889*. There is a single-story wood bay window on the east façade.

The Selmes house is listed as a contributing structure in the East End National Register Historic District.

29.1083 **<u>Designation of 237 North 6th Street</u>** --- That 237 North 6th Street, Quincy, Illinois is hereby designated a Landmark.

That the legal description of 237 North 6th Street is as follows:

The east 57.42 feet of the north 48 feet of lot 1, block 10, Quincy Survey.

That the historical name of the building is the Blackstone Building.

That the style of the building is Richardsonian Romanesque.

That the date of construction is 1889.

That the architect or builder is Buerkin and Kaempen, contractors.

That the architectural features which will be provided protection are as follows:

(1) Prominent arched entry.
(2) Limestone columns flanking entry.
(3) Rounded arches over door and window openings.

(4) Wood window frameworks.
(5) Stone sills.
(6) Radiating brick lintels.
(7) Oriel window with pressed metal surround.
(8) Prism glass in transom of south first story window on east façade.
(9) Wood and metal cornice.
(10) Rough-faced masonry walls.
(11) Contrasting colors and textures.
(12) Limestone string course over first story.
(13) Iron guard rails in front of east window wells.

That the historical significance of 237 North 6th Street is architectural.

Richardsonian Romanesque buildings were popular from 1880 to 1900. Henry Hobson Richardson used features borrowed from the Romanesque to create this style. It was used to impart dignity to larger private and public buildings during the 1880s. Richardsonian Romanesque buildings feature masonry construction and usually involve two or more colors of brick or stonework. The body of the façade has varying rough textures that contrast with smooth wide arches over the windows and entryway.

The Blackstone Building has wide round arches over the door and window openings. The façade has a heavy appearance due to the thick-walled limestone and brick exterior. The building is three stories high with a flat roof and limestone foundation. Exterior features also include a central oriel window with pressed metal surround, a wood and metal cornice, and radiating brick lintels.

E.W. Charles Buerkin and Joseph Kaempen were outstanding Quincy contractors and builders who worked in various styles. Both men came to the United States from Germany when they were quite young. Both had worked in carpentry for about twenty years before forming the Buerkin and Kaempen firm in 1888. They built a wide range of buildings from private homes, such as the Albert and Anna Dick House at 1100 State Street, to large public structures, including what is now the Quincy Junior High School building at 100 South 14th Street. The business was located on Vermont Street between 4th and 5th Streets and included a planning mill, a wood product factory, and a lumber storage yard.

The Blackstone Building has always been used for offices and housed the offices of the Gem City Building and Loan at one time. Changes to the exterior have been modest. The cornice, once painted in contrasting colors, is now painted completely white. A photograph from the 1920s shows awnings shading some of the windows on the east façade.

29.1084 <u>Designation of 1641 Hampshire Street</u> --- That 1641 Hampshire Street, Quincy, Illinois is hereby designated a Landmark.

That the legal description of 1641 Hampshire Street is as follows:

The west 110 feet of the south one half of lot 15, Nevin's Survey.

That the historical name of the house is the Jesse E. Weems House.

That the style of the house is Queen Anne.

That the date of construction is circa 1886.

That the architect or builder is Harvey Chatten.

That the architectural features which will be provided protection are as follows:

(1) Sunburst pediments under the front gable, on the front porch, and above the rectangular bay window.

(2) Cut stone foundation.

(3) Original wood siding.

(4) Two-story rectangular bay window on the east side.

(5) Horizontal band with rectangular molding on the front porch and front façade.

(6) Decorative half-timbering above the west porch entry and in the west gable.

That the historical significance of 1641 Hampshire Street is architectural.

Jesse E. Weems, the original owner of the home, was born and educated in Virginia before moving to Quincy in 1853. He started the Pure Ice & Cold Storage Company in 1894. This company made ice and supplied it to residences and businesses in Quincy and along the Mississippi River until the 1950s. Quincy Bay, fed by clear water springs, was the industry's primary location. The Pure Ice & Cold Storage Company also dealt in coal and wood. According to *Past and Present of the City of Quincy and Adams County*, the company was one of the city's leading commercial enterprises in 1905, with "considerable" employment.

The Weems house was designed by Quincy native Harvey Chatten. He studied under Robert Bunce, a versatile designer who played an important role in Quincy's early architecture. Chatten designed a large number of Queen Anne buildings in Quincy.

Queen Anne houses were popular in Quincy from 1880 to 1900. The style typically displays multi-textured walls, asymmetrical facades, steeply pitched roofs, and complex shapes and details. The Weems House has a hipped roof with lower cross gables and features sunburst-decorated pediments around the top window of the front gable and entry.

A large multi-pane window covers most of the first floor front façade where a porch and bay window originally stood. A sympathetic two-story addition to the north end of the house was completed in 1997. The addition is sided with clapboard. Because the large front window and addition to the rear are much later than the original house, these alterations are not considered to be significant features.

The Jesse E. Weems House is listed as a contributing structure in the East End National Register Historic District.

29.1085 <u>Designation of 2000 Jersey Street</u> --- That 2000 Jersey Street, Quincy, Illinois, is hereby designated a Landmark.

That the legal description of 2000 Jersey Street is as follows:

Lot 2, block 4 in the Lawndale Addition, lot 1 and the west 40 feet of lot 2.

That the historical name of the house is the Charles A. Appleton House.

That the style of the house is Colonial Revival with Craftsman influence.

That the date of construction is 1907.

That the architect or builder is Ernest M. Wood.

That the architectural features which will be provided protection are as follows:

(1) Enclosed front porch with Doric columns and arched entryway.

(2) Elaborate cornice.

(3) Uncoursed rough ashlar.

(4) Wood shutters.

(5) Front door and door surround.

(6) Cube-like dentils.

(7) Arched hall light above porch.
(8) Stone chimneys.
(9) Stone wall and fence.
(10) Balustrade above porches.

That the historical significance of 2000 Jersey Street is architectural.

The house was designed by Quincy architect Ernest M. Wood for Charles H. Appleton, a retired steamboat captain. Wood was the architect for many Quincy buildings and learned the profession as an apprentice to Harvey Chatten. The house was built in 1907. A date stone in the west gable marks the year.

The Colonial Revival movement took hold after architects McKim, Mead, White, and Bigelow reinterpreted American colonial housing in prototypes such as an 1883-1884 house (also called the "Appleton House") in Lennox, Massachusetts. By the late 1890s, photos and drawings in periodicals such as *The American Architect and Buildings News* helped to disseminate the fashion. The Colonial Revival emphasized balanced facades and the central placement of front doors and entryways. Formal entry porches with pediments and pilasters or columns are often flanked by symmetrically placed window openings.

The Appleton House is just such a symmetrical arrangement of windows, dormers, and chimneys with a prominent, centered front entry. The entry's Doric columns, the arched windows in the dormers, and the cornice treatment are all Colonial Revival features. However, in using uncoursed rough limestone for the body of the façade, Wood departed from the style to introduce a strong Craftsman flavor to the composition.

The Appleton House is listed as a contributing structure in the East End National Register Historic District.

29.1086 **<u>Designation of Brewery Area Local Historic District</u>** --- That 1017-19, 1020, 1021-23, and 1025-27 Kentucky Street are hereby designated the Brewery Area Local Historic District.

That the legal description of the District is as follows:

Lots 3, 4, and 5, block 68 in John Wood's Addition to the City of Quincy, Adams County, in the State of Illinois; the west one half of lot 4, all of lots 5 and 6, and the east 3 feet of lot 7, all in block 69 in John Wood's Addition to the City of Quincy, Adams County, in the State of Illinois.

That the historical names of the houses included in the District are as follows:

1017-19 Kentucky Street – Bernard Strotman House.
1020 Kentucky Street – August (Manny) Dick House.
1021-23 Kentucky Street – Joseph Steinkamp House.
1025-27 Kentucky Street – John F. Tieman House.

That the styles and dates of construction of the houses included in the District are as follows:

1017-19 Kentucky Street – Double Pile Cottage, circa 1854.
1020 Kentucky Street – Prairie Style/Craftsman, 1917.
1021-23 Kentucky Street – Double Pile Cottage, 1854.
1025-27 Kentucky Street – Double Two-Thirds Double Pile House, 1856.

That the architect or builder of 1020 Kentucky Street is George H. Behrensmeyer, and that the architects or builders of 1017-19, 1021-23, and 1025-27 Kentucky Street are unknown.

That the architectural features which will be provided protection are as follows:

1017-29, 1021-23, and 1025-27 Kentucky Street

(1) Pronounced gable returns.
(2) All exterior brick and stone.
(3) Porches with squared columns.
(4) All exterior brickwork and limestone foundations.
(5) Segmental arched windows under each gable.
(6) Windows with stone sills.

1017-19 Kentucky Street – Bernard Strotman House

(1)Two front entrances with flat brick lintels at opposite ends of the façade.
(2) Central brick chimney.
(3) Porch columns with decorative brackets.
(4) Brick lintels over front windows.
(5) Limestone water table on south façade.

1020 Kentucky Street – August (Manny) Dick House

(1) All exterior brick (tapestry bond) and stone.
(2) Corner piers with stone caps.
(3) All windows with stone sills.
(4) Narrow wooden strips decorating the undersides of eaves.
(5) Wide eaves with brackets.
(6) Four gutter drainpipes curving around eaves and sides of structure.
(7) Small square ornaments applied to corner piers.
(8) Central brick chimney.
(9) Original gently sloping roofline.
(10) Garage at back of property with tile trim at roofline.

1021-23 Kentucky Street – Joseph Steinkamp House.

(1)Two entrances together at center with transom windows.
(2) Chimneys at gable ends.
(3) Brick arched lintels over front windows.

1025-27 Kentucky Street – John F. Tieman House.

(1) Two entrances at center with transom windows.
(2) Brick arched lintels over front windows.
(3) Two story vernacular construction.

That the historical significance of the District is personal and architectural.

Approximately 10,500 Germans settled in Quincy between 1840 and 1870. The first German settlers established themselves in the southeast corner of the first addition to Quincy, south of Maine Street, between South 5th Street, and South 9th Street. By 1860, over 6,200 (45%) of Quincy residents were German-born. Almost all of the immigrants resided in a district east of South 7th Street between York and Jackson. This concentration of settlement helped bring about what is today the largest urban collection of vernacular housing built between 1840 and 1880 in Illinois. The immigrants tended to be laborers and

tradesmen, such as carpenters and cabinetmakers, whose skills were in great demand in the new community.

The three vernacular buildings on the north side of Kentucky Street are built of native limestone and local brick, the predominant construction materials used from the 1850s to the 1880s. Limestone was quarried in the south end of Quincy and brick was made from a stratum of shale clay found just beneath the surface. The brick was often made on the lot during construction. After the 1880s it became more economical to import harder brick manufactured in St. Louis or Chicago.

Each of the vernacular buildings is side gabled with two front entrances facing the street. 1017-19 Kentucky was originally built as a two-thirds double pile cottage. The west side was built first, with the chimney being on the east end. The east side is a later addition, creating a double pile cottage. The house is now split into two separate apartments, but the floor plan is consistent with the original. The west apartment is larger and includes the upstairs. The apartment on the east side consists of three rooms. German immigrant Bernard Strotman, a worker in the beer industry, was the first owner of 1017-19 Kentucky.

1021-23 Kentucky is a one and a half story double pile cottage. It was originally organized as an eight-room house, with six rooms downstairs and two upstairs. It is now split into two apartments. The larger eastern apartment includes the upstairs rooms. Joseph Steinkamp, listed as a laborer in the Quincy City Directory of 1859, was the original owner.

The building at 1025-27 Kentucky was built as a two-story vernacular dwelling with four rooms on each level. The interior was later split into four apartments, two upstairs and two downstairs. Late 20th century additions consisting of a false mansard roof, a full front porch, and stucco siding were removed by the present owners in 1998. The original porch footprint and outline of a gable were revealed during the renovation. The present owners have taken great care to rebuild the porch exactly where the original existed. The entire exterior has been restored to return the house to its original appearance. The first owner of this home was John F. Tieman, who is also listed as a laborer in the 1859 Quincy City Directory.

If the ho uses on the north side of Kentucky express traditional immigrant construction practices during the south side's first decades, the August (Manny) Dick residence across the street at 1020 Kentucky was one of the last to be built in the area. Its roots in the neighborhood are familiar rather than ethnic.

Brothers Matthew, John and Jacob Dick were born in the town of Ruppertsburg, Rhenish Bavaria and settled in Quincy in 1856. In 1865 they founded the Dick Brothers Quincy Brewery as a small establishment on the south side of York Street. By century's end, it had grown to be the largest brewery between Chicago and St. Louis. When the leadership of the firm passed to the second generation, Jacob's son August Dick was named president, and his cousins Albert, Frank and Ernest were appointed secretary, treasurer and superintendent.

August thought it would be desirable to build a residence that would overlook the brewery holdings, which by 1901 included an office building at 901 York, and a brew house, ice house, bottling house, and warehouse along the street to the east. August's mother, Margaret Redmond Dick, acquired the property at 1020 Kentucky for August in 1910. August commissioned architect George Behrensmeyer (1869-1959) to design the

residence, which was completed in 1917. Margaret lived with August until her death in 1920. August lived alone in the house until 1940.

August continued as president of the brewery until his retirement in 1937. During his long and profitable business career he also served as vice president of the State Savings Loan and Trust, and for a time, as president of the South Side Bank of Quincy.

Most houses built from 1900 to 1930 in the South Side German District were patterned book bungalows that drew from the Craftsman style. While sound examples of period design, they have no particular associations with the neighborhood. In contrast, the architect-designed August Dick House is one of only a few outstanding examples of Prairie/Craftsman style in this part of Quincy. With this commission Behrensmeyer created an impressive but inviting residence. The house's open gables, exposed rafter tails, and window groupings are Craftsman-influenced details, while its wide eaves, corner piers, front porch, and broad, flat chimney are Prairie features.

Each of the four buildings is listed as a contributing structure in the South Side German National Register Historic District. The August (Manny) Dick House was designated a Local Landmark inn 1993.

ARTICLE XI PERMITS

Section 29.1101 Permits - Fees ---

(1) **Permit**: It shall be unlawful for any "person" as defined in Section 33.102(2) of this Code, and including any public-private or not for profit corporation, as well as any unit of local government or taxing entity, to in any manner alter, repair, remove or demolish or to commence the construction, alteration, repair, removal or demolition of a building, structure or premises within the City of Quincy or within the contiguous territory within one and one-half (1-1/ 2) miles beyond the corporate limits of Quincy without first filing with the Building Inspector an application in writing and obtaining a formal permit. Notwithstanding anything herein to the contrary, a building permit shall not be required for landscaping, for grading or other earth work, or for the installation of ground-level parking areas or driveways including concrete divisions or island. However, other permits may be required under other provisions of this Code.

(a) **Exemption**: Schools, state and federal agencies: Notwithstanding the foregoing, no permit shad be required from any school governed and regulated by the Illinois School Code, as now or hereafter amended, or from any state or federal institution or agency governed or regulated by state or federal rules, regulations or specifications with regard to building constriction, alteration, repair or demolition. Any such exempt entity, shall nevertheless file with the Building Inspector a statement of exemption identifying the state or federal rules, regulations or specifications relied upon for said exemption, and also a copy of the building or construction plans for the project.

(b) **Exempt projects**: One and two family residential uses: Items that do not require permits for one and two family residential uses, are:

1.) Flat concrete with no roof or walls;
2.) Interior or exterior painting;
3.) Kitchen cabinets or bathroom vanities;
4.) Roofing surface (shingles or rolled roofing);
5.) Interior walls, floor or ceiling surfaces (wallpaper, paneling, carpeting, drop ceiling, drywall).

(c) **Exempt projects**: Multi-family, commercial and industrial: Items that do not require permits for multi-family, commercial and industrial uses, are:

1.) Flat concrete with no roof` or walls;
2.) Interior or exterior painting (wallpaper interior);
3.) Roofing (shingles or rolled roofing).

(2) **Fees**: Except for any municipal corporation, unit of local government or taxing entity, any person required to obtain a building permit from the Building Inspector, as provided above, shall pay the Building Inspector the fees prescribed below:

(a) **One and two family residential**:

1.) New construction, extensions and additions (cost based on square footage):

	Effective until 1/1/02	Effect. 1/1/03	Effect. 1/1/04	Effect. 1/1/05	Effect. 1/1/06	Effect. 1/1/07
Per sq. ft.						
First 50,000 sq. ft.	$ .22	$ .23	$ .24	$ .25	$ .26	$ .27
50,001 sq. ft.	$ .01	$ .01	$ .01	$ .01	$ .01	$ .01

2.) Remodeling/repairs (cost based on estimated value of materials):

DOLLARS	Effective until 1/1/02	Effect. 1/1/03	Effect. 1/1/04	Effect. 1/1/05	Effect. 1/1/06	Effect. 1/1/07
$ 0 - 500	$ 19.00	$ 20.00	$ 21.00	$ 22.00	$ 23.00	$ 24.00
501 - 1,000	$ 24.00	$ 25.00	$ 26.00	$ 27.00	$ 28.00	$ 29.00
1,101 - 1,500	$ 29.00	$ 30.00	$ 31.00	$ 32.00	$ 33.00	$ 34.00
1,501 - 2,000	$ 34.00	$ 35.00	$ 36.00	$ 37.00	$ 38.00	$ 39.00
2,001 - 20,000	$ 3.00 / $ 1,000		$ 4.00 / $ 1,000			
20,001 - 100,000	$ 2.50 / $ 1,000		$ 3.50 / $ 1,000			
100,001 +	$ 2.00 / $ 1,000		$ 3.00 / $ 1,000			

3.) Unattached garage and accessory buildings (more than 10’ from dwelling and 60’ from road):

Garage (cost per sq.ft.)	$ 0.11	$ 0.115	$ 0.12	$ 0.125	$ 0.13	$ 0.135
Other accessory bldgs. (minimum fees)	$ 19.00	$ 20.00	$ 21.00	$ 22.00	$ 23.00	$ 24.00

4.) Demolition:

Accessory bldgs.	$ 35.00	$ 40.00	$ 45.00	$ 50.00	$ 55.00	$ 60.00
Single story structures	$ 70.00	$ 75.00	$ 80.00	$ 85.00	$ 90.00	$ 95.00
Additional floors (10’)	$ 5.00	$ 5.00	$ 5.00	$ 5.00	$ 5.00	$ 5.00

5.) Outside corporate limits with no city utilities: The following fee schedule pertains to new residential construction, extensions, additions:

First 50,000 sq. ft.	$ .11	$ .12	$ .13	$ .14	$ .15	$ .16
50,001+ sq.ft. per sq.ft.	$ .01	$ .01	$ .01	$ .01	$ .01	$ .01

6.) Outside corporate limits with no city utilities (cost based on estimated value of materials): The following fee schedule pertains to remodeling or repairing:

DOLLARS						
$0 – 500	$ 19.00	$ 20.00	$ 21.00	$ 22.00	$ 23.00	$ 24.00
501 – 1,000	$ 24.00	$ 25.00	$ 26.00	$ 27.00	$ 28.00	$ 29.00
1,001 - 1,500	$ 29.00	$ 30.00	$ 31.00	$ 32.00	$ 33.00	$ 34.00
1,501 - 2,000	$ 34.00	$ 35.00	$ 36.00	$ 37.00	$ 38.00	$ 39.00

2,001 - 20,000	$3.00/$1,000	$4.00/$1,000
20,001 - 100,000	$2.50/$1,000	$3.50/$1,000
100,001+	$2.00/$1,000	$3.00/$1,000

7.) Outside corporate limits with no city utilities: The following fee schedule pertains to accessory buildings (more than 10' from dwelling and 60' from road):

Garage and other Accessory buildings (cost per sq. ft.)	$ 0.05	$ 0.06	$ 0.07	$ 0.08	$ 0.09	$ 0.10

8.) Outside corporate limits with no city utilities: The following fee schedule pertains to demolitions:

	Effective 1/1/02	Effect. 1/1/03	Effect. 1/1/04	Effect. 1/1/05	Effect. 1/1/06	Effect. 1/1/07
Accessory bldgs.	$17.50	$20.00	$22.50	$25.00	$27.50	$30.00
Single story Structures	$35.00	$37.50	$40.00	$42.50	$45.00	$47.50
Additional floors (10')	$ 5.00	$ 5.00	$ 5.00	$ 5.00	$ 5.00	$ 5.00

9.) A fee of $50.00 per tower shall be charged for towers which exceed the height limitations provided in Section 29.202 of this Code. No permit nor fee shall be required for towers within the height limitations provided in said Section 29.202.

10.) For fencing, based on estimated costs, as in 2.).

11.) Property outside the corporate limits but which is connected or which will be connected to city utilities (sewer and/or water), as a part of the construction project will be charged the same fee as if the property were in the corporate limits.

(b) **Multi-family, commercial and industrial**:

1.) New construction, extensions and additions (cost based on square footage):

	Effective Until 1/1/02	Effect. 1/1/03	Effect. 1/1/04	Effect. 1/1/05	Effect. 1/1/06	Effect. 1/1/07
First 50,000 sq.ft.	$.30	$.33	$.36	$.39	$.42	$.45
50,001-100,000 sq.ft.	$.05	$.05	$.05	$.05	$.05	$.05
100,001 + sq.ft.	$.04	$.04	$.04	$.04	$.04	$.04

2.) Remodeling/repairs (cost based on estimated value of materials):

DOLLARS						
$0 - 500	$45.00	$50.00	$55.00	$60.00	$65.00	$70.00
501 - 1,000	$50.00	$55.00	$60.00	$65.00	$70.00	$75.00
1,001 - 1,500	$57.00	$62.00	$67.00	$72.00	$77.00	$82.00
1,501 - 2,000	$60.00	$65.00	$70.00	$75.00	$80.00	$85.00
2,001 - 20,000	$5.00/$1,000		$7.00/$1,000			
20,001 - 100,000	$4.00/$1,000		$6.00/$1,000			
100,001 +	$3.00/$1,000		$4.50/$1,000			

3.) Demolition:

0’ - 10’ in height	$200.00	$225.00	$250.00	$275.00	$300.00	$325.00
10’ - 20’ in height	$ 50.00	$ 50.00	$ 50.00	$ 50.00	$ 50.00	$ 50.00
Each additional 10’	$ 25.00	$ 25.00	$ 25.00	$ 25.00	$ 25.00	$ 25.00

4.) Outside corporate limits with no city utilities:

New construction	$ .16	$ .17	$ .18	$ .19	$ .20	$ .21
	Effective 1/1/02	Effect. 1/1/03	Effect. 1/1/04	Effect. 1/1/05	Effect. 1/1/06	Effect. 1/1/07
Remodeling & repairs (based on est. value of materials)						
$0 - 5,000	$110.00	$125.00	$135.00	$145.00	$155.00	$165.00
5,001 - 10,000	$130.00	$140.00	$150.00	$160.00	$170.00	$180.00
10,001 - 20,000	$230.00	$155.00	$165.00	$175.00	$185.00	$195.00
20,001 - 50,000	$195 + $5.00/$1,000					
50,001 +	$495 + $2.00/$1,000					

5.) For demolitions outside corporate limits with no city utilities the fee shall be 50% of 3.)

29.1102 <u>Form</u> ---

(1) An application for a permit shall be submitted in such form as the Building Inspector may prescribe.

(2) Such application shall be made by the owner or lessee of the premises, or the duly authorized agent of either. Such agent may include, but not necessarily be limited to, the owner's or lessee's architect, engineer, contractor or builder. The responsibility for assuring that a building permit has been obtained rests with the owner or lessee. However, no contractor, builder, or other person retained in connection with any work or project requiring a building permit shall commence the work or project without having confirmed with the owner or lessee that a building permit has been obtained. No contractor, builder or other person retained in connection with the work or project shall continue such work or project after becoming aware that a building permit has not been issued when required whether or not a stop work order has been issued until the required building permit has been issued.

(3) Such application shall contain the full names and addresses of the applicant and of the owner, And, if the owner is a corporate body, of its responsible officers.

(4) Such application shall describe briefly the proposed work and shall give such additional information as may be required by the Building Inspector for an intelligent understanding of the proposed work.

29.1103 <u>Plans</u> ---

(1) **Generally**: Application for permits shall be accompanied by such drawings of the proposed work, drawn to scale, including floor plans, sections, elevations and structural details as the Building Inspector may require.

(2) **Towers**: Plans for a tower shall be made under or accompanied by the seal of a licensed structural engineer.

29.1104 <u>Plot diagram</u> --- There shall also be filed a plot diagram in a form and size suitable for filing permanently with the permit record, drawn to scale, with all dimensions figured, snowing accurately the size and exact location of al proposed new construction, or in the case of demolition, of such construction as is to be demolished, and of all existing buildings and structures that are to remain.

29.1105 <u>Amendments</u> --- Nothing in this Article shall prohibit the filing of amendments to an application or to a plan or other record accompanying same, at any time before the completion of the work for which the permit was sought. Such amendment, after approval, shall be filed with and be deemed a part of the original application.

29.1106 <u>Completion of existing buildings</u> --- Nothing in this Chapter shall require changes in the plans, construction of designated use of a building for which a lawful permit has been heretofore issued or which has been otherwise lawfully authorized and the construction of which shall have been actually begun within 90 days after this Chapter becomes effective and which entire building shall be completed, as authorized, within two (2) years thereafter.

29.1107 <u>Action on application</u> --- It shall be the duty of the Building Inspector to examine applications for permits, within a reasonable time after filing. If, after examination, he finds no objection to the same and it appears that the proposed work will be in compliance with the laws and ordinances applicable thereto, he shall approve such application and issue a permit for the proposed work as soon as practicable. If his examination reveals otherwise, he will reject such application, noting his findings in a report to be attached to the application and delivering a copy to the applicant.

29.1108 <u>Approval in part</u> --- Nothing in this Section shall be construed to prevent the Building Inspector from issuing a permit for the construction of part of a building or structure before the entire plans and detailed statements of said building or structure have been submitted or approved, if adequate plans and detailed statements have been presented for the same and have been found to comply with this Chapter.

29.1109 <u>Conditions of the permit</u> ---

(1) All work performed under a permit issued by the Building Inspector shall conform to the approved application and plans, and approved amendments thereof.

(2) The location of all new construction as shown on the approved plot diagram or an approved amendment thereof shall be strictly adhered to.

(3) It shall be unlawful to reduce or diminish the area of a lot or plot of which a plot diagram has been filed and has been used as the basis for a permit, unless a revised plot diagram showing the proposed change in conditions shall have been filed and approved

provided that this shall not apply when the lot is reduced by reason of a street opening or widening or other public improvement.

29.1110 Signature to permit --- Every permit issued by the Building Inspector under the provisions of this Chapter shall have his signature affixed thereto; but this shall not prevent him from authorizing a subordinate to affix such signature.

29.1111 Limitation --- A permit under which no work is commenced within six (6) months after issuance shall expire by limitation.

29.1112 Posting ---

(1) A building permit poster issued and signed by the Building Inspector shall be displayed on the front of the premises open to public inspection during the prosecution of the work and until the completion of the same.

(2) The Building Inspector may require a certified copy of the approved plans to be kept on the premises at all times from the commencement of the work to the completion thereof.

(3) The Building Inspector shall be give at least twelve (12) hours notice of the starting of work under a permit.

29.1113 Revocation --- The Building Inspector may revoke a permit or approval issued under the provisions of this Chapter in case there has been any false statement or misrepresentation as to a material fact in the application or plans on which the permit it approval was based.

29.1114 Certificate of non-conforming use --- A certificate of non-conformance shall be required of all non-conforming use of land as provided in Article VIII of this Code.

29.1115 Building Code --- All buildings and structures built within the City of Quincy or within the contiguous territory within one and one-half (1-1/2) miles beyond the city's corporate limits shall comply with the construction regulations of the city established by Article I of Chapter 23 of this Code, the provisions therein being incorporated herein by this reference.

29.1116 Electrical Code --- All buildings and structures built within the City of Quincy or within the contiguous territory within one and one-half (1-1/2) miles beyond the city's corporate limits shall comply with the electrical construction and installation regulations, including any permit requirements, of the city established by Chapter 26 (Electricity) of this Code, the provisions therein being incorporated herein by this reference.

29.1117 Plumbing Code --- All buildings and structures built within the City of Quincy or within the contiguous territory within one and one-half (1-1/2) miles beyond the city’s corporate limits shall comply with the plumbing construction, maintenance end installation regulations, including any permit requirements, of the city established by Article I of Chapter 24 (Plumbing and Sewers) of this Code the provisions therein being incorporated herein by this reference.

ARTICLE XII AMENDMENTS AND CHANGES

Section 29.1201 <u>Generally</u> --- The regulations imposed and the districts created under this Chapter may be amended from time to time by ordinance.

29.1202 <u>Procedures</u> ---

(1) **Initiation of amendments**: Amendments may be proposed by the Mayor and City Council, by the Zoning Board if Appeals, by the Plan Commission, by any person having a proprietary interest (which shall include, but not be limited to, the interest of an owner, beneficial owner, tenant, contract purchaser or option holder) in the property affected by such amendment, or by any interested citizen of the city.

(2) **Application for amendment**: An application for an amendment shall be filed with the City Clerk who shall forward a copy of the same to the Plan Commission without delay. The application shall be filed in such number of copies, be in such form, and contain such information as the secretary of the Plan Commission may prescribe from time to time. If such application pertains to amending the district map, the application shall be accompanied by eight (8) copies of a plat, drawn or pictured to an accurate scale by a person competent therein, showing all pertinent information which pertinent information shall include, at a minimum, the existing zoning and actual use of the property involved and adjoining property as well as the general area immediately affected by the proposed change. If such application pertains to amending the provisions of this Chapter, a proposed ordinance shall be submitted. The Plan Commission shall conduct a public hearing thereon, to be held within sixty (60) days from the date of the receipt of the application by the secretary of the Plan Commission.

(3) **Notice of hearing**: The Plan Commission shall cause to be published public notice of the hearing on each proposed amendment at least once, not less than fifteen (15) days nor more than thirty (30) days before such hearing, in a newspaper published within the City of Quincy. The notice shall contain the date and location of the public hearing, the subject property for which the amendment is requested, a brief statement of the use for which the amendment is being requested and shall state that every person in attendance at the hearing shall have an opportunity to be heard, that every "Interested Party" (as defined under Article I of Chapter 29 of the Municipal Code) shall have the right to cross-examine others at the hearing, provided that such Interested Party enters his or her appearance with the Department of Planning and Development no later than three (3) business days before the date of the public hearing. In addition to providing public notice by publication, the Department shall post a sign at the subject property advising the public of the requested action; such sign shall be posted not less than fifteen (15) days prior to the public hearing.

(4) **Notice to property owners**: If a change in the district map is sought, the applicant shall not less than fifteen (15) days before the date of the public hearing, serve written notice, either in person or by registered or certified mail, return receipt requested, on at least one owner of each property within 250' in each direction of the lot line of the subject property unless waived by the Plan Commission or City Council. Ownership shall be based solely on the tax records of Adams County. The number of feet occupied by all public roads, streets, alleys, and other public ways shall be excluded in computing the 250' requirement; provided further that in no event shall this requirement exceed 400', including public streets, alleys and other public ways. Said notice shall contain the same information as is required under paragraph (3) above for the public hearing notice. If, after a bona fide

effort to determine such address by the applicant, the owner of the property on which notice is served cannot be found at his or its last know address, or the mailed notice is returned because the owner cannot be found at the last known address, the notice requirements of these provisions shall be deemed satisfied. Proof of giving notice hereof by affidavit shall be filed with the secretary of the Plan Commission. A failure to comply with the provisions of this subsection shall not affect or invalidate any zoning amendment or change and additionally may be waived by the City Council or Plan Commission.

(5) **Review by the Plan Commission**: The proposed amendment or change shall be reviewed by the Plan Commission. The Plan Commission shall thereafter file a report with the City Council. The Plan Commission shall have 60 days following the filing of the application or proposed amendment or change to submit its report. If a report is not filed with the City Council within 60 days, it may be assumed by the City Council that the Plan Commission approved the application. The applicant for any change may, however, agree to a longer time period than set forth herein.

(6) **Continuation of hearing**: After notice of a scheduled hearing has been published or served on adjoining property owners, as provided herein, such hearing may be continued or withdrawn only upon approval of the Plan Commission. A request by an applicant for continuation or withdrawal may only be granted for good cause. Any such request must be made in person to the Plan Commission or in writing setting forth the reasons for the request. Notwithstanding any such request, the Plan Commission shall have the discretion to: grant the request; deny the request and hold any required public hearing and make a recommendation to the City Council regarding the subject application; or grant a continuance and defer taking any final action, but proceed with any required public hearing. In addition, and notwithstanding the foregoing, if an applicant (who has otherwise failed to previously request a continuation or withdrawal of an application) fails to appear at the scheduled hearing, the application may be denied by the Plan Commission with or without any required public hearing and such denial reported to the City Council.

(7) **Action by the City Council**: After receiving the recommendations and report of the Plan Commission, the City Council may pass the proposed amendment with or without change, may reject it, may recommit it to the Plan Commission for further consideration, or take other appropriate action. In case of a written protest against any proposed amendment of the regulations or districts, signed and acknowledged by the owners of 20% of the frontage proposed to be altered, or by the owners of 20% of the frontage immediately adjoining or across an alley therefrom, or by the owners of 20% of the frontage directly opposite the frontage proposed to be altered, is filed with the Clerk of the municipality, the amendment shall not be passed except by a favorable vote of two-thirds (2/3) of the aldermen of the City Council then holding office. In such cases, a copy of the written protect shall be served by the protestor or protestors on the applicant for the proposed amendment and a copy upon the applicant's attorney, if any, by certified mail at the address of such applicant and attorney shown in the application for the proposed amendment.

(8) **Amendment of application**: A proposed amendment or change to the terms of this Chapter may be amended from time to time as the City Council, Plan Commission or other appropriate party may desire. A proposed amendment or change in the district map may also be amended at any time by the applicant subject to the condition that the publication and notice requirements herein established are again complied with. It shall not, however, be necessary to again comply with the publication and notice requirement, herein established if the application for amendment or change to the district map is to a

zoning classification which is included within the zoning classification sought and relative to which the publication and notice requirements herein established have been complied with. Thus, for example, an application for a C2 district may be amended to an application for RS, R1A, R1B, R1C, R2, R3, C1A or C1B district as the uses in such zoning classifications are included within the general C2 zoning classification of permitted uses.

(9) **Alternate and cumulative applications**: Nothing herein shall prevent a person from applying for alternate changes in zoning classifications or a change in zoning classification and/or a special permit. If the publication and notice requirements herein established have been complied with, the Plan Commission may recommend amendments, changes or special permits subject to the City Council's approval of appropriate amendments, changes or special permits.

(10) **Effect of denial of zoning change**: After a public hearing has been held and a zoning change denied in hole or part by the City Council, an application for the same shall not be resubmitted for a period of one (1) year from the date of such denial, unless allowed by the City Council. In general, resubmission shall be allowed only if there is substantial new evidence or proof of changed conditions found to warrant resubmission.

29.1203 **Fees** --- Except in those cases where an amendment is requested by the city, a fee of $200.00 shall be paid to the city to defray the costs of publishing and posting notice of the proposed amendment and the costs of maintaining a record of the public hearing. Such fee shall be paid to the secretary of the Plan Commission.

29.1204 **Unlawful use** --- Neither the provisions of this Chapter nor any amendment or change hereof shall be so interpreted as authorizing any use or condition theretofore existing which is unlawful under applicable provisions in effect at the time of such amendment or change if the use or condition continues to be unlawful under the provisions of this Chapter or any amendment or change hereof.

ARTICLE XIII VIOLATION AND PENALTY

Section 29.1301 **Penalty** --- Any person, firm or corporation who violates any of the provisions of this title shall, in addition to such other relief as the law may afford, be punishable as set forth in Chapter 32 of this Code.

29.1302 **Institution of suit** --- In case any building or structure is erected, constructed, reconstructed, altered, repaired, converted, or maintained, or any building, structure or land is used in violation of this Chapter, the proper authorities of the City of Quincy, or any aggrieved person, in addition to other remedies, may institute any appropriate action or proceedings to prevent such unlawful erection, maintenance or use, to restrain, correct or abate such violation, to prevent the occupancy of said building, structure or land or to prevent any illegal act, conduct, business or use in or about such premises.

ARTICLE XIV SIGNS

Section 29.1401 <u>Intent</u> --- It is the intent of this Article to regulate and control the location, erection, number and maintenance of signs and matters relating thereto within the City of Quincy in order to promote public safety, health and general welfare of the community. These regulations are specifically designed to:

(1) Provide for uniform regulation and orderly development of signs consistent with established policies and ordinances of the city.

(2) Prohibit hazardous and dangerous signs.

(3) Provide a desirable and attractive living environment through harmonious and uniform signage.

29.1402 <u>Scope</u> ---

(1) **Generally**: The provisions of this Article shall govern the erection, alteration and maintenance of all signs and outdoor display structures, together with their appurtenant and auxiliary devices, with respect to location, size, content, construction, structure and fire safety. Nothing herein shall be construed to limit or restrict any other applicable regulations or ordinances relating to signs.

(2) **Exempt signage**: The provision of this Article shall not apply to:

(a) **Flags**: Flags of any nation, state, county, city or other governmental unit and any not-for-profit organization;

(b) **Temporary holiday displays**: Temporary decorations or displays celebrating the occasion of traditionally accepted patriotic, religious or local holidays or events;

(c) **Traffic signs**: The erection, construction and maintenance of official traffic, fire and police signs, signals and devices and markings of the state, county or city;

(d) **Directional sign**: Non-illuminated directional or informational signs of a public nature;

(e) **Political signs**: Political signs or signs announcing political candidates or issues, provided they are erected not more than three (3) months before an election and removed within seven (7) days after the election. The foregoing limitation shall not apply to a successful candidate in any primary election, provided such signs are removed within fourteen (14) days following the general election.

(f) **Garage sale signs**: Residential garage or patio sale signs not to exceed six (6) square feet provided such signs located upon the premises where the sale is taking place and is removed within seventy-two (72) hours of being posted or erected.

(g) **Real estate sale signs**: Property real estate signs not exceeding six (6) square feet in area, which advertise the sale, rental or lease of the premises upon which said signs are located only;

(h) **Charitable or public bulletin board sings**: Bulletin boards not over thirty-two (32) square feet in area, philanthropic, for public, charitable or religious institutions which are located on the premises of said institutions;

(i) **Building identification signs**: Memorial signs or tablets, names of buildings and date of erection when cut into any masonry surface or when constructed of bronze or other incombustible materials;

(j) **Occupational signs**: Non-illuminated professional name plates or occupational signs and home occupation signs not exceeding one (1) square foot in area, wall-mounted adjacent to the main entrance of the building;

(k) **Non-visible signs**: Signs erected inside a building not visible through windows;

(1) **Hospital directional signs**: Informational or directional signs designating hospital emergency room entrances or drives.

(m) **Special displays**: Special displays (see 29.1403 (2)) provided such signs or displays are removed within fourteen (14) days of the conclusion or termination of the holiday, event or purpose promoted or advertised by the special display sign.

29.1403 <u>Rules and definitions</u> ---

(1) **Rules of construction**: For the purpose of this ordinance, certain rules of construction shall apply to the text as follows:

(a) Words used in the present tense include the future tense; and the singular includes the plural, unless the context clearly indicates the contrary.

(b) The terms "shall" and "must" are always mandatory and not discretionary; the words "may" or "should" are permissive.

(c) Words or terms not interpreted or defined by this Section shall be used with a meaning of common or standard utilization or as otherwise specifically provided in this Code.

(d) The word "person" includes a firm, organization, association, partnership, trust, company or corporation, as well as an individual.

(e) The words "use" or "occupy" shall include the words "intended", "designed", "arranged" to be "used" or "occupied".

(2) **Definitions**: The following definitions shall apply in interpretation and enforcement of this ordinance unless otherwise specifically stated:

<u>Abandoned sign</u>: A sign which for a period of more than one year no longer correctly directs or exhorts any person, advertises a bona fide business, lessor, owner, project of activity conducted or product available on the premises where such sign is displayed, except as otherwise permitted for off premises advertising.

<u>Animated signs</u>: Any sign which includes action or motion. For purposes of this ordinance, this term does not refer to flashing or changing, all of which are separately defaced.

<u>Banner</u>: A sign made of fabric, plastic, paper or other light pliable material, not enclosed in a rigid frame, so as to permit movement of the sign by wind or atmospheric movement.

<u>Billboard</u>: See "Standard Outdoor Advertising Structure".

<u>Building face or wall</u>: All window and wall area or a building in one place or elevation.

<u>Building Inspector</u>: The official responsible for enforcement of this ordinance, or his or her designee.

<u>Canopy</u>: Any structure attached to a building at the inner end and supported on the other end, or a free-standing structure, with one or more supports, meant to provide shelter from weather elements onto which signs may be affixed or incorporated.

<u>Changeable copy signs (manual)</u>: A sign on which copy is changed manually in the field, i.e., reader boards with changeable letters or changeable pictorial panels.

Changeable copy signs (automatic): A sign such as an electronically or electrically controlled public service time, temperature and date sign, message center of reader board, where different copy changes are shown on the same lamp bank.

Church bulletin boards: A sign attached to the exterior of a church or located elsewhere on church premises and used to indicate the services and/or other activities of the church, and including the church name, if desired.

City: The City of Quincy.

Copy: The wording or graphics on a sign surface.

District: As defined under the zoning ordinance and zoning district map.

Erect: To build, construct, reconstruct, attach, hang, rehang, alter, place, affix, enlarge, move or relocate.

Facade: The front or main part of a building facing a street; for purposes of this ordinance the facade is defined as measured from the ground elevations to the lead beam.

Face of sign: The entire area of a sign on which copy could be placed. The area of a sign which is visible from one direction as projected on a place.

Flashing signs: Any sign which contains an intermittent or flashing light source, or which includes the illusion of intermittent or flashing light by means of animation, or in externally mounted intermittent light source. Automatic changing signs such as public service time, temperature and date signs or electronically controlled message centers are not classed as "flashing signs".

Frontage: The length of the lot along the street side. The front of a lot bordering more than one street is considered separate for each street.

Gasoline and oil service stations: Any business which dispenses, or is designed to dispense gasoline and/or oil for use in motor vehicles or boats.

Ground level: Immediate surrounding grade.

Heights of sign: The vertical distance measured from the surrounding grade to the highest point of sign.

Illegal signs: A sign which contravenes this ordinance, or a non-conforming sign for which a permit required under a previous ordinance was not obtained.

Interior property line: Property lines other than those forming a dedicated public right-of-way.

Logo: A letter, character or symbol used to represent a person, corporation or business enterprise.

Lot: A parcel, tract, plat or area of land accessible by means of a street or other permanently reserved principal means of access. It may be a single parcel separately described in a deed or plat which is recorded in the office of the County Recorder of Deeds, or it may include parts of or a combination of such parcels when adjacent to one another and used as one as determined by the Building Inspector.

Owner: A person recorded as such on official records and including duly authorized agent, a purchaser, lessee, devicee, receiver, trustee or any person having a vested or contingent interest in the property or business in question.

Person: Any natural person, firm partnership, association, corporation, company, trust or organization of any kind.

Premises: An area of land with its appurtenances and buildings which, because of its unity of use, may be regarded as the smallest conveyable unit of real estate.

Reader boards: Any sign that has changeable or removable lettering.

Right-of-way (R.O.W.): Shall mean any publicly owned or used right-of-way.

Roof line: The highest point of the coping of a flat roof, false mansard or parapet wall; the decline of a true mansard roof; the ridge line between the upper and lower slopes of a gambrel roof; or the mean height level between the eaves and ridge for a gable or hip roof.

Seasonal or special occasion temporary signs: A sign which is not permanent and is limited to a special activity or in the celebration of holidays or other special events.

Setback: The minimum, horizontal distance between either the face of curb, the edge of pavement, or the right-of-way line and the sign structure as specified in a particular section of this ordinance.

Shopping Center: A building containing two (2) or more shops, stores and other retail and/or service places of business, and providing off-street parking facilities in common for all of the businesses and their customers.

Show window signs: Any temporary sign advertising sales or specials attached to or within three (3) feet of the glass surface or any fixed window (glazing) visible from a public right-of-way.

Sign: Any identification, description, illustration or device illuminated or non-illuminated which is visible from any public place or is located on private property and exposed to the public and which directs attention to a product, service, place, activity, person, institution, business or solicitation, including any permanently installed or situated merchandise or any emblem, painting, banner, pennant or placard designed to advertise, identify or convey information, with the exception of window displays and national flags. For the purposes of this ordinance, this definition shall include, but, not be limited to, those signs painted directly upon a building or other structure. For the purpose of removal, signs shall also include all sign structures. Not included are decorative devices or emblems as may be displayed on a residential mailbox.

Sign area: The area of the sign face. The "sign area" of a multi-faced sign is the sum of the sign areas of each face, including structural trim which can be seen from a single location on an adjacent street. If a sign is attached to a building or suspended in any manner whereby there is no apparent trim or confirming border, the sign area shall be computed by drawing an imaginary straight line around a generally rectangular margin and measuring the area so encompassed upon a building or other structure.

Sign, attached: A sign erected or placed upon the wall of any building with the plane of the face parallel to the plane of the wall.

Sign, canopy: Any sign hanging entirely beneath a canopy, portico or marquee.

Sign, commercial directory: A permanent pole sign designating the name of a commercial center and listing the various tenants of the center.

Sign, construction: A temporary sign used during construction of new buildings or reconstruction of or additions to existing buildings, such as those identifying the project and denoting the owner, architect, engineer, contractor, and/or financing institutions of the project.

Sign, directional: A sign which indicates a direction for vehicular or pedestrian traffic or other movement.

Sign, electrical: A sign containing electrical wiring which is attached or intended to be attached to an electrical energy source.

Sign, fluttering: A sign which flutters and includes banners, flags, pennants or other flexible material which moves with the wind or by some artificial means.

Sign, ground: Any detached sign of the same lot or parcel as the use it advertises which has its bottom portion erected upon or supported by the ground, a ground planter box, or other supports.

Sign, illuminated: Any sign which is illuminated by light sources mounted on or in the sign or at some other location.

Sign, memorial or tablet: The permanent part of a building which denotes the name of the building, date of erection, historical significance, dedication or other similar in information.

Sign, non-conforming: A sign legally erected under the previously existing ordinances of the city, but which does not conform to the provisions of this ordinance.

Sign, open letter: A sign consisting of letters and/or numbers attached to the face of a building without structural trim or background.

Sign, overhanging: Any sign which project more than twelve (12) inches beyond the plane of the wall on which the sign is erected or attached.

Sign, occupational and/or identification: An attached wall sign not larger than one (1) square foot in area identifying the name of a person occupying a building.

Sign, political: A temporary sign advocating or opposing any political proposition or candidate for public office.

Sign, pole: Any detached sign located on the same lot or parcel as the use it advertises which is supported by one or more stationary poles no taller than 30' above the mean grade line of the ground at its base provided that this shall not include a permitted ground sign as set forth.

Sign, portable: See temporary sign.

Sign, project identification: A permanent ground sign identifying an apartment complex, condominium project or mobile home development entry, name and/or street names within the project.

Sign, projecting: Any sign which projects more than twelve (12) inches beyond the plain of the wall on the sign which is erected or attached.

Sign, property real estate: A sign pertaining only to the prospective rental, lease or sale of the property upon which it is located. Real estate signs shall be exclude from the definition of pole signs.

Signs, residential construction project: Any temporary sign that provides direction to any residential development under construction, or promotes the residential development on the project site.

Sign, roof: Any sign erected on a roof but excluding marquee and canopy signs and wall signs. The generally vertical plan of a mansard-type roof shall be interpreted as the same as a wall of a building.

Sign, structure: The sign and all parts associated with its construction.

Subdivision identification signs: A permanent ground sign identifying a subdivision entry, subdivision name and/or street names within the subdivision.

Sign, supports: All structures by which a sign is held up, including, for example, poles, braces, guys and anchors.

Temporary signs: Any sign intended for a limited or intermittent period of display or which is portable and not permanently attached or affixed to real estate or any improvement thereon.

Temporary window signs: A temporary sign affixed to the inside or hanging within three (3) feet of an exterior window or glass door.

Special displays: Signs not exceeding thirty-two (32) square feet, used for holidays, public demonstrations or promotion of civil welfare or charitable purposes.

Standard outdoor advertising structure, off premises poster panel and/or billboard: Any sign intended to attract general public interest concerning a commercial enterprise, product, service, industry or other activity not conducted, sold or offered on the premises upon which the sign is erected, or a sign which advertises or identifies goods, products or services which may incidentally be sold on the premises on which the sign is located. Such signs, however, shall not include signs which identify or advertise the name of the business or person or primary and principal activity, good or services located on the premises where the sign is erected. By way of example, a billboard advertising a soft drink or beverage, which is sold as an incident to the business conducted on the premises, shall nevertheless, be considered a billboard, provided the owner or name of the business upon which such sign is located is not identified or named. This includes billboards, detached pole signs on separate parcels, wall signs and signs otherwise attached to buildings and/or supported by uprights or braces on the ground. Real estate signs and political signs are excluded from this definition.

Street: A public thoroughfare which affords the principal means of access to abutting property.

Use: The purpose of which a building, lot, sign or other structure is arranged, intended, designed, occupied or maintained.

Zoning ordinance: The zoning ordinance of the City of Quincy and the current zoning district map related thereto.

29.1404 Administration and enforcement ---

(1) **Administration**: Except where herein otherwise stated, the provisions of this Article shall be administered by the Building Inspector or by deputies of his department as he or she may designate to enforce provisions of this ordinance.

The Building Inspector (or his or her authorized representative) is hereby empowered in performance of its functions to enter upon any land in the city for the purpose of making inspections, examinations and surveys, or to place and maintain thereon markers, notices or signs required to effect provisions of this Article.

The above authorized person shall be required to present proper credentials upon demand when entering upon any land or structure for the purpose of this Article.

(2) **Duties of the Building Inspector**: The Building Inspector shall have the power to grant sign permits, and to make inspections of buildings or premises necessary to carry out his duties in the enforcement of this Article.

Unless otherwise provided in this Article or other provisions of this Code, it shall be improper for the Building Inspector to approve plans or issue any permits or certificates for any sign until he or she has inspected such plans in detail and found them to conform with this Article, nor shall the Building Inspector vary or change any terms of this Article.

If the Building Inspector shall find that any of the provision of this Article are being violated, he or she shall notify in writing the person responsible for such violations, indicating the nature of the violation and stating the action necessary to correct it. He shall order discontinuance of illegal use of land, buildings or structures; removal of illegal signage; discontinuance of any illegal work being done; or shall take any other action

authorized by this Article to insure compliance with or to prevent violation of its provisions.

(3) **Permit required**:

(a) **Generally**: It shall be unlawful to commence or to proceed with the erection, construction, reconstruction, conversion, alteration, enlargement, extension or moving or any sign or sign structure or any portion thereof without first having applied in writing to the Building Inspector for a sign permit to do so and a sign permit has been granted therefore. Primary responsibility for securing the necessary permits shall be the property owner's. However, if the property owner should contract part or all of the proposed work, it shall become the responsibility of the person or firm hired to ensure that all required permits and approvals have been secured prior to any work being initiated.

(b) **Exception**: No permit shall be required for temporary banners, shop window signs and temporary window signs, which are erected for a period of 30 days or less.

(c) **Form**: Application for permits shall be made in such form as required by the Building Inspector. There shall be a separate permit for each sign to be constructed, altered or erected.

(d) **Fee**: The applicant for a sign permit shall pay a fee to the Building Inspector as follows:

SIGNS

Sign Size	**Fee**
0 - 24 square feet	$ 5.00
25 - 49 square feet	$ 15.00
50 - 74 square feet	$ 20.00
75 - 99 square feet	$ 25.00
100 - 150 square feet	$ 30.00
Each additional 25 square feet over 150	$ 2.50 per

Poster Panel - Billboards

Billboard Size	**Fee**
0 - 100 square feet	$ 15.00
101 - 200 square feet	$ 20.00
201 - 200 square feet	$ 25.00
301 - 399 square feet	$ 30.00
400 - 499 square feet	$ 35.00
500 - 576 square feet	$ 40.00
Each additional 100 square feet over 576	$ 2.50 per

(e) **Expiration**: Any sign permit issued hereunder, shall expire and be void unless: (i) construction work has been commenced within six (6) months after the date of

issuance of said permit; and (ii) construction has been completed within one (1) year of the time of issuance of said permit.

(4) **Voiding of sign permit**: A permit may be revoked by the Building Inspector at any time prior to the completion of the sign for which the same was issued, when it shall appear to the Building Inspector that there is departure from the plans, specifications or conditions as required under the terms of the permit, that the same was procured by false representation, or that any provisions of this ordinance are being violated. Written notice of such revocation shall be served upon the owner, his agent or contractor, or upon any person employed on the building or structure for which such permit was issued, via a stop-work order, which shall be posted in a prominent location, and thereafter no such construction shall proceed.

(5) **Compliance with sign permits**: Sign permits on the basis of approved plans and applications authorize only the use, arrangement and construction set forth in the approved plans and applications, and no other use, arrangement or construction. Any use, arrangement or construction at variance with the authorized shall be deemed a violation of this ordinance as provided herein.

(6) **Violation**: If it is found that a sign is in violation of this ordinance, the Building Inspector or his or her designee, shall give notice to the owner of the sign, or if the owner cannot be located, to the owner or occupant of the premises on which the sign is located or, if the sign erection is not complete, to the sign erector, either personally, by United States Mail, or by posting such a notice on the premises, such notice stating:

(a) The violation found; and

(b) That the violations must be brought into compliance within the requirements of this and all other city ordinances within ten (10) days from the date of such notice; and

(c) The requirements which must be met; and

(d) That any person found to be in violation of any provision of this ordinance shall be subject to the penalties provided in Article XIII of this Code, with each day of such violation constituting a separate offense without further notice being required.

29.1405 <u>Sign contractors</u> ---

(1) **Sign contractor's license**:

(a) **Sign contractors to be licensed**: No person shall perform any work or service for any person for compensation, in whatever form, in connection with the erection, construction, enlargement, alteration, repair, moving, improvement, maintenance of any sign in the city, or any work or service, in connection with causing any such work to be done unless such person shall first have obtained a sign contractor's license from the City Clerk and paid the license fees provided for by the city, or shall be represented by a sub-contractor licenses herein as a contractor. Any license issued hereunder shall be personal to the licensee and shall not be assignable.

1.) **Exception**: Notwithstanding the foregoing, a person engaged solely in painting or repainting of sign structure shall not be deemed a "sign contractor" as defined above and shall not be required to obtain a sign contractor's license.

(b) **Sign contractor license fee**: Before any person shall engage in the business of sign contracting in the city or continue in said business, such person shall be required to pay a license fee of $25.00 the first year and $25.00 per year thereafter. All registrations hereunder shall expire on April 30th of each year, irrespective of the date of issuance. The

City Clerk shall keep a suitable record of all registrations for sign contractor's licenses in the city.

(2) **Indemnification for sign installation and maintenance**: As a condition to the issuance of a sign contractor's license as required herein, all persons engaged in the business of painting, installing or maintaining signs which involves, in whole or part, the erection, alteration, relocation, maintenance of a sign, or other sign work in or over or immediately adjacent to a public right-of-way or public property so that a portion of the public right-of-way is used or encroached upon by the sign installer, shall, and by the issuance of said license agree to indemnify and hold harmless the city, its officers, agents and employees, from any and all claims of negligence resulting from erection, alteration, relocation or maintenance work.

(3) **Insurance**: Every applicant for a license shall, before such license is granted, file with the city a satisfactory certificate of insurance against any form of liability for property damage and for personal injury. The insurance shall be maintained in full force and effect during the term of the business license.

29.1406 <u>Prohibited signs</u> --- The following signs and advertising devices are hereby declared to be unlawful:

(1) Any sign erected in a location prohibited by this Article.

(2) Any sign erected in a public easement or right-of-way, except as otherwise provided in this Code.

(3) Any sign erected so as to prevent free ingress to or egress from any door or window, or any other exit way required by the building or fire codes of the city.

(4) Any sign attached to any public utility pole, tree, fire hydrant, curb, sidewalk or other surface located on public property, except as otherwise provided in this Code.

(5) Any sign erected in any location where, by reason of its location, will obstruct the view of any authorized traffic sign, signal or other traffic-control device. Nor may any sign, by reason of its shape, position or color interfere with or be confused with any authorized traffic signal sign or device. Further, no sign shall be erected in a location where it will obstruct, vision of the public right-of-way to a vehicle operator during ingress to, egress from, or while traveling on the public right-of-way.

(6) Except for permitted standard outdoor advertising sign structures, any on-premises sign advertising an article or product not manufactured, assembled, processed, repairer or sold or a service not rendered upon the premises upon which the sign is located. Notwithstanding the foregoing, any sign advertising a product or article for sale on the premises solely from a vending machine or other machine dispensing products or articles upon the deposit of currency is prohibited.

(7) Any sign or advertising device such as banners and pennants affixed on poles, wires, ropes or streamers, wind-operated devices, fluttering signs, pinwheels, streamers, banners, street banners used for a period of more than 30 days in any six month period.

(8) Any "A" frames or other temporary portable signs of like nature, and other similar signs not permanently affixed to a building or to ground, except that these devices may be used for a period of 30 days in any twelve month period by permit from the Building Inspector.

(9) Off-site or off-premises signs except as provided in this Article.

(10) Signs which contain characters, cartoons, that contain statements, words or pictures of an obscene, indecent prurient or immoral character.

29.1407 <u>Non-conforming signs</u> ---

(1) Any sign legally existing prior to enactment of this Article but which shall violate any provision of this Article, may continue to be maintained and used after passage of this article subject to the following provisions:

(a) **Enlargement**: No non-conforming sign shall be enlarged, expanded or extended to occupy a greater square footage or height than was occupied on the date of adoption or amendment of the Article.

(b) **Relocation**: No non-conforming sign shall be moved in whole or in part to any other portion of the lot, parcel or building not so occupied on the date of adoption of this Article, except that any such sign which is hereafter required to be moved by a governmental body for the purpose of construction, relocation, widening or improvement of a street, highway or other public purpose, may be relocated once and allowed to be maintained and used as before.

(c) **Discontinuance**: Except for seasonal signs, if the business or service advertised or identified by a non-conforming sign ceases to be conducted for a period exceeding thirty (30) calendar days, the non-conforming sign shall be classified as an "abandoned sign", and removed. See Section 29.1409(5).

(d) **Destruction**: Should any non-conforming sign be damaged or destroyed by any means to an extent of up to 50% of its surface area or structure, it shall not be reconstructed, except in conformance with the requirements of this ordinance.

(e) **Eventual removal-amortization**: Except as to standard outdoor advertising structures, poster panel, and/or billboards, in any instance where a sign is non-conforming to any of the requirements of this ordinance, such signs, and supporting structure where necessary, shall be discontinued and removed not later than fifteen (15) years from the date of passage of the ordinance.

(2) **Violations not made valid**: Any sign which is prohibited by this ordinance, and was erected in violation of former Section 29.703 of this Code or other requirements of the City of Quincy, shall not be considered to be granted non-conforming status by the passage of this ordinance.

(3) **Determination of non-conformance**: should any existing sign be enlarged, replaced or reconstructed, it shall be considered a new sign. Except as to standard outdoor advertising structures, post panels and/or billboards, if an existing sign is repainted or the sign panels be replaced for the purpose of changing the business, occupation or tenant advertised or identified, it shall be considered a new sign. However, the repainting of a sign for ordinary maintenance or the repair or restoration of an existing sign to a safe condition after being damaged by storm or other accidental act as shown in accordance with the original sign permit, shall not constitute such a change as to classify the sign as a new one, subject to the provisions of Section 29.1407(1)(d) “Destruction”.

29.1408 <u>Appeals</u> ---

(1) Any person, firm, corporation, aggrieved by a decision of the Building Inspector, or any governmental officer, department, board or commission, may appeal a decision of the Building Inspector to the Zoning Board of Appeals in accordance with Article VII of Chapter 11 of this Code, subject to the further requirements of this Section.

(2) **Grounds for granting a variance**: The Zoning Board of Appeals may grant variances from this ordinance for any permitted form of a signage where it is found that

because of the limitations on character, size or dimensions of a sign, or the regulations controlling the erection or installation of a sign, the applicant would be subject to undue hardship. The loss of possible advantage, economic loss or gain, or mere inconvenience to the applicant alone shall not be considered undue hardship.

(3) Appeals from decisions of the Zoning Board of Appeals may be made to the City Council.

29.1409 General sign requirements ---

(1) **Permit number displayed**: Any sign hereafter erected following passage of this ordinance shall display the sign permit number upon the face of the sign in the lower right-hand corner or as otherwise approved by the Building Inspector. In the case of pole mounted signs, the number shall be incorporated into the base of the sign structure.

(2) **Structural requirements**:

(a) **Generally**: All signs shall comply with the pertinent requirements of the building code, as adopted by the City of Quincy.

(b) **Free-standing signs-materials**: All free standing sign structures or poles shall be self-supporting structures erected on and permanently attached to concrete foundations. Such structures or poles shall be fabricated only from painted steel or such other materials as may be approved by the B.O.C.A., Basic Building Code, as adopted and incorporated into this Code.

(c) **Electric signs**: All electric signs have a disconnecting switch located in accordance with the provisions of Chapter 26 (Electricity) of this Code. The full number of illuminating elements thereof shall be kept in satisfactory working condition or immediately repaired or replaced. Signs that are only partially illuminated shall meet all electrical requirements for that portion directly illuminated. All electrical wiring used in connecting illuminated signs to power source shall be installed in accordance with Chapter 26 (Electricity) and Chapter 15 (Licenses and Permits) of this Code.

(d) **Glass**: When glass is used for sign letters or transparent panels, it shall be at least double strength thickness for sign areas up to and including 300 square inches. When glass is used for sign letters or transparent panels for sign areas in excess of 300 square inches at least one-quarter (1/4) inch wire glass shall be used and the maximum span between supports shall be four (4) feet.

(e) **Strength of parapet wall**: A parapet wall must have sufficient strength to support any sign which is attached hereto.

(f) **Supports and braces**: Metal supports or braces shall be adequate for wind loadings (see Section 29.141(2)(g)). Wire or cable supports shall be adequate for safe support of the sign. All metal, wire cable supports and braces and all bolts used to attach sign to bracket or brackets and signs to the supporting building or structure shall be galvanized or of an equivalent material.

(g) **Wind loads**: All signs shall be designed and constructed in conformity to the provisions of materials, loads and stresses Basic Building Code as adopted and incorporated into this Code. The effect of special local wind pressures shall be thoroughly considered in the design, but in no case shall the wind load be assumed less than thirty (30) pounds per square foot of net exposed area for roof signs or ground signs.

(h) **Sign anchoring**: Signs shall be anchored to prevent any lateral movement that would cause wear on supporting members or connectors.

(i) **Use of combustibles**: All signs shall conform with the provisions Basic Building Code as adopted and incorporated in this Code regarding the use of combustible materials. Notwithstanding any other requirements or regulations, all signs hereafter located on or at any lot or premises containing a gasoline service station shall be constructed of noncombustible materials.

(3) **General safety**: Any existing sign which is or becomes an immediate danger or hazard to person or property because of being in an unsafe condition, or which obstructs any vehicular traffic view, fire escape, window or door, is subject to immediate removal by the Building Inspector without notice and at the expense of the property and/or sign owner.

(4) **Maintenance**: Each sign shall be maintained in a safe, presentable and good condition. All existing signs shall be painted except where the sign is of a non-corroding material, galvanized, or otherwise, treated to prevent rust. Broken panels, missing letters, flaking or peeling paint incompletely illuminated (if intended as an illuminated sign) and other visual damage to a sign shall be repaired within forty-five (45) days of occurrence or notification by the Building Inspector.

(5) **Abandoned signs**: Any abandoned sign as defined in this Article or other sign or sign structure which advertises a business no longer conducted or service no longer sold on the premises or lot shall be classified an abandoned sign and shall be removed by the owner, agent or person having beneficial use of the premises or lot upon which the sign is located within ten (10) days following written notice by the Building Inspector concerning its removal.

(6) **Illumination**: Neither the direct nor reflected light from primary light sources shall create a traffic hazard to operators of motor vehicles on public thoroughfares.

(7) **State right-of-way requirements**: All signs erected within the jurisdiction of State right-of-way requirements shall meet both State and city requirements.

29.1410 **<u>Residential signage</u>** --- Residential signage shall be permitted in RU1, RE, RS, R1A, R1B, R1C, R2, R3, and NRI districts (single and multi-family districts).

(1) **Single and multi-family residential uses**:

(a) **Allowable signs**:

1.) **Subdivision identification signs**: Two permanent subdivision or project identification signs not exceeding 32 sq. ft. in size per face, shall be allowed per development.

Where the development has access on two or more streets, or has more than one entrance on one street, identification shall be allowed at each entrance.

2.) **Church, public or semi-public buildings, or public park identification signs**: Not more than one sign per street frontage not exceeding 32 sq. ft. in size per face.

3.) **Construction signs**: Not more than one sign per street frontage not exceeding 10 sq. ft. in size per face. Signs identifying contractor, mechanics, painters, architects, engineers and similar artisans and workmen which are on the site or attached to or on trailers on the site of construction shall be permitted provided that upon completion of the project the sign or the trailer to which it is attached must be removed within one (1) week.

4.) **Residential project construction promotional signs**: One sign not exceeding 32 sq. ft. per face. Such sign shall be removed either at such time as the

permanent subdivisions entrance sign is erected, or when 50% of the lots and/or dwelling units have been sold, whichever circumstances occurs first.

5.) **Directional signs**: Two signs per entry/exit not exceeding 6 sq. ft. in size per face.

6.) **Property real estate sales signs**: One sign per lot frontage not exceeding 6 sq. ft. in size per face. Such signs shall be removed within ten (10) days following the date of closing or lease initiation.

7.) **Special displays and other temporary signs**: See Section 29.1403(2).

8.) Signs not exceeding 2 sq. ft. in size per side nor a height of 4' from the ground which prohibit trespassing, or indicate privacy or premises, driveways or streets.

9.) Non-illuminated home occupation wall signs not exceeding 1 sq. ft. wall-mounted on the dwelling, affixed to a window or placed no more than 1" from the foundation.

10.) Official government flags.

(b) **Location and height**:

1.) No sign placed upon the ground shall be located closer than 10' to any property line.

2.) No sign attached to the wall of a building or other structure shall extend above the roof line of that building or structure.

3.) For the signs included it paragraph (1)(a) of this Section, items 1.) through 3.) and 7.), no sign shall exceed 8' in height from the surrounding grade to the highest point of the sign.

4.) **Residential project construction promotion signs**: One sign per major entrance to the subdivision or project site.

5.) **Direction signs**: No sign shall exceed three and one-half (3.5) feet above the elevation of the adjacent driveway.

6.) **Property real estate signs**: No sign shall exceed 6' in height from the surrounding grade to the highest point on the sign.

7.) **Subdivision and project identification signs**: No sign shall be more than 6' in height from the surrounding grade to the highest point on the sign.

29.1411 **<u>Commercial signage</u>** --- Commercial signage shall be permitted C1A through C3 zoning districts.

(1) **Allowable signs**:

(a) All signs permitted in Section 29.1410(1)(a).

(b) **Attached signs**: One or more attached signs, provided the total of all attached signage does not exceed 10% of the total square footage of the building face upon which it is placed or one attached open letter sign not exceeding 15% of the total square footage of the building face upon which it is placed. In the instance of corner lots, additional attached signs will be permitted on each street frontage of the building not exceeding 10% or 15% as the case may be of the total square footage of the respective building face upon which it is placed. For buildings with multiple tenants, see paragraph (3) "Other Requirements".

(c) **Overhanging sign**: One overhanging sign not exceeding 32 sq. ft. In the instance on corner lots, an additional overhanging sign shall be permitted for each street frontage of the building.

(d) **Ground mounted signs**: Except for buildings or property with multiple occupancy, one ground-mounted sign per lot not exceeding 32 sq. ft. per face. Any structural trim or architectural detailing that does not convey an advertising message is not computed in the 32 sq. ft. per face limit.

(e) **Pole signs**: Except in C1A and multiple occupancy buildings (see 29.1411(1)(i)). Pole signs shall be allowed as follows:

1.) No pole sign shall be permitted on lots having less than 50' of street frontage.

2.) One pole sign, not exceeding 50 sq. ft. on any lot having not less than 50' nor more than 75' of street frontage. Said sign shall not exceed 30' in height.

3.) One pole sign not exceeding 75 sq. ft. on any lot having not less than 75' nor more than 200' of street frontage. Said sign shall not exceed 35' in height.

4.) One pole sign not exceeding 150 sq. ft. for any lot having more than 200' of street frontage. Said sign shall not exceed 40' in height. Any pole sign exceeding 30' in height shall maintain a minimum side yard set back of at least one and one-half (1-1/2) times the height of the sign. An additional pole sign shall be permitted for each 150' of street frontage provided the total square footage of pole signage conforms to the requirements of this Section. By way of example, a lot having street frontage of 300' shall be allowed two pole signs which could consist of a 150 sq. ft. sign (more than 200' of street frontage) and a maximum 75 sq. ft. sign (more than 75' of street frontage).

(f) **Changeable copy signs**: In addition to any allowed pole sign, there shall be permitted an informational or changeable copy sign which shall be attached to the pole sign, which sign shall not exceed 32 sq. ft.

(g) **Occupational/Identification signs**: One attached sign exceeding 2 sq. ft. in displaying the name, occupation and/or service located upon the premises, and the address.

(h) **Permanent window signs**: Shall not cover more than 20% of the total window area or door to which they are applied.

(i) **Directories**: For buildings with multiple occupancies, a directory sign may be substituted in lieu of the allowable pole sign. Such a sign may exceed the limitations specified in subsection 29.1411(1)(e), above, upon review and approval by the Zoning Board of Appeals as to height and overall square footage.

(j) **Canopy signs**: Canopy signs which are attached to a canopy not exceeding 5 sq. ft.

(2) **Location and height**:

(a) All signs permitted by paragraph (1), item (a), of this Section, shall be governed as to height and location by the requirements of Section 29.1410(1)(b).

(b) **Attached signs**: Shall be face mounted on the building wall, projecting not more than 12" from the face of the building.

(c) **Overhanging signs**: Such signs shall be at least 10' above the surrounding grade. No such sign shall extend over public right-of-way except as approved by the City Council as provided in Section 14.501 of this Code.

(d) **Ground mounted signs**: Such signs shall not exceed 6' in height from the surrounding grade to the highest point on the sign and shall be located no closer than 10' to any property line. Such signs shall not be located so as to obstruct vision at a vehicular entry or exit from the property.

(e) **Pole signs**: The bottom of the sign shall be at least 10' above the surrounding grade.

(f) **Occupational/identification signs**: Such signs shall conform to the locational requirements of subsection (b) ("Attached Signs") of this paragraph.

(g) **Window signs**: Such signs may be attached to or painted on either the interior or exterior of a window or glass door and shall be maintained in good repair.

(h) **Canopy signs**: Canopy signs shall maintain a clearance of 8' above ground or pavement.

(3) **Other requirements**:

(a) **Maximum number of signs**:

1.) **Generally**: Except as otherwise provided, each building or property shall be allowed a maximum number of signs as follows:

a.) One overhanging sign

b.) Either a ground-mounted sign or a pole sign, unless more than one of such signs is permitted pursuant to Section 29.1411(1)(d).

2.) **Exception**: Window signs and occupational/directions signs as regulated by this section are excluded from this maximum restriction. A ground-mounted sign or a pole sign, may include a separate sign area or face consisting of an information, changeable sign, provided the total sign area of the ground or pole sign does not exceed the limitations specified in Section 29.1411(1)(d) and (e).

(b) **Multiple occupancy building**: For buildings and/or property containing more than one business or tenant, each business or tenant may have an attached sign conforming to the requirements of this Section. For the purposes of determining the total square footage of the attached sign, only the face of each respective lease unit to which the respective sign will be attached shall be counted. Each sign must be attached to the lease unit containing the business or tenant identified.

(c) Each building or property may have additional attached signs conforming to the requirements of this Section on walls containing a main entrance which face customer parking area. For this exception to apply, the signs must be attached to the same wall as their respective entrances and both the signs and the entrances must be upon the same plane of the building.

(d) **Plan required**: An application to erect a pole sign shall be accompanied by the following:

1.) A set of plans, provided by owner of the sign or structural engineer, or architect providing all necessary construction and electrical details of the sign and sign structure, including a representation of the proposed sign, including the width and length of the sign faces, and height from surrounding grade and wind load as provided in the BOCA building code as adopted and incorporated in this Code.

2.) **A site plan containing**:

a.) The proposed location of the sign upon the property.

b.) The distance from the proposed sign location to any building (s) upon the property, and adjoining street right-of-way lines and driveway entrances.

c.) The distance from the proposed sign location to the adjacent property lines.

d.) The distance from the proposed sign location to the nearest street intersection in either direction.

29.1412 **<u>Industrial signage</u>** --- Industrial signage shall be permitted in M1, M2 and M3 districts.

(1) **Allowable signs**:

(a) All signs permitted by Section 29.1411(1).

(2) **Location and height**:

(a) As regulated by Section 29.1411 (2).

(b) **Exception**: Industrial uses having one or more permanent building(s) may provide any number of illuminated wall or pole signs in any location on the premises or building, provided that such signs do not exceed the height, area or setback requirements as set forth in Section 29.1411(2). (This exception shall not apply to commercial uses permitted within M1 through M3 zoning districts).

29.1413 <u>Special use signage</u> ---

(1) **Automobile and truck service stations-convenience stores with gasoline pumps**:

(a) **Allowable signs**:

1.) **Brand identification signs**:

a.) One pole-mounted sign not exceeding 50 sq. ft. per face. In addition, there may be attached to a pole sign an informational or changeable copy sign not exceeding 32 sq. ft.

b.) One ground-mounted sign, in lieu of a pole-mounted sign, not exceed 50 sq. ft. in size per face.

c.) One attached sign meeting the requirements of Section 29.1411(1)(b).

2.) **Price signs**:

a.) One price sign for each pole or ground-mounted sign and for each pump island not exceeding 16 sq. ft. per face per sign, per price, not exceeding 48 sq. ft. total.

3.) **Self-service and/or full service signs**: Two self service or full service signs per pump island not exceeding 10 sq. ft. per face per sign.

4.) **Federal and State stamps, octane ratings, pump use directions, no smoking signs**: As required by Federal, State and local authorities.

4.) **Temporary signs**:

a.) No more than 6 temporary signs may be displayed on a zoning lot and the total sign area shall not exceed 120 sq. ft. Temporary signs may include light standard, banners and free standing signs;

b.) An event sign announcing a campaign, drive or event of a civic, philanthropic, educational or religious organization is excluded from the total allowable square footage requirement. Such signs shall be displayed no more than 30 days before the campaign, drive or event and removed within 7 days after the end of the campaign, drive or event;

c.) On any corner lot, no temporary sign shall be located within 15’ of a street intersection as measured from the street right-of-way at the corner;

d.) At all vehicle driveways, there shall be no temporary signs placed within 15’ of the intersection of the driveway and street right-of-way unless 8’ above grade (see figure 1);

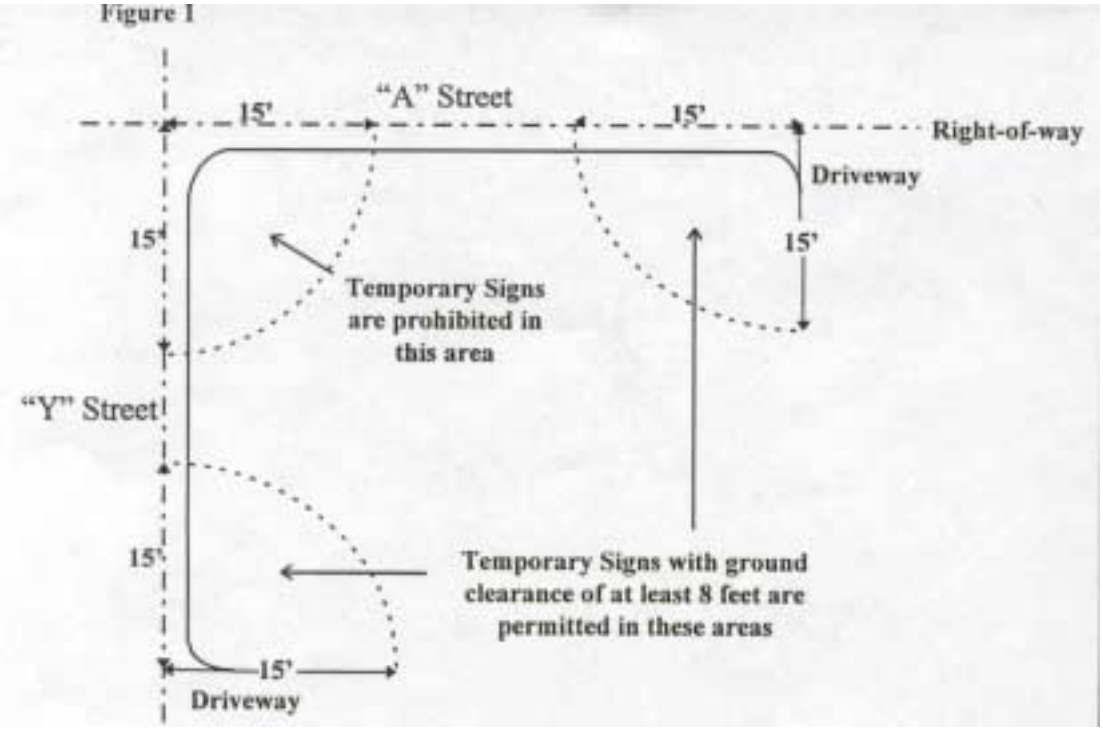

e.) No sign shall be placed which impedes pedestrian or vehicular traffic;

f.) Any sign that is deteriorating or weather worn shall be removed promptly upon notification by the Building Inspector.

g.) Any person, firm or corporation who violates this provision shall be subject to the fine and penalty provisions of Article XIII of Chapter 29 of this Code and Section 29.1404(6) of this Article except that the minimum fine for a violation of this subsection shall be $250.00.

(b) **Location and height**:

1.) **Brand identification signs**:

a.) **Pole signs**: As regulated by Section 29.1411(2)(e).

b.) **Ground-mounted signs**: As regulated by Section 29.1411(2)(d).

c.) **Attached signs**: As regulated by Section 29.1411(2)(b).

2.) **Price signs and self-service and/or full service signs**: Shall be located on the pole or ground-mounted sign and/or at the ends of pump islands and may be affixed to the canopy, canopy supports, poles or end pumps.

3.) **Federal and State stamps, octane ratings, pump use directions, no smoking signs**: Shall be placed upon the body of the gasoline pump, or as required by the respective governmental authority.

(c) **Other requirements**:

1.) **Canopy use**: An attached or detached canopy may be used in addition to the permitted pole sign for the location of brand identification signs, price signs or company logos.

(2) **Other temporary or portable signs**:

(a) Temporary or portable signs not permanently affixed to the ground, a building or other appurtenant structure may be approved by issuance of a permit by the Building Inspector for up to a 30 day time period during any 12 month period. Such signs

may be extended beyond the 30 day time period, but only upon review and approval by the Building Inspector.

(b) Temporary or portable off-premises signs may be approved by issuance of a permit by the Building Inspector when necessary to direct traffic toward the location of a business or commercial property which has been made less accessible to traffic by the 2002-2003 closing of the Memorial Bridge provided that such permit shall be only for the duration of said bridge closing.

29.1414 **Standard outdoor advertising structure (billboards)** --- In addition to the other requirements and provisions of this Article, standard outdoor advertising structures, off premises poster panels and/or billboards shall be subject to the following provisions and requirements.

(1) **Where permitted**: Advertising signs complying with all the requirements of this ordinance shall be permitted in the following zoning districts: C2, C3 (C4 if attached to a building), M1, M2 and M3, which are located adjacent to any "through street" as from time to time designated in Section 20.329 of this Code or adjacent to the "one-way street" located on York, Vermont, Hampshire, Third and Fourth Streets as designated and described in Section 20.332 of this Code but the same shall not be permitted within any residential or planned residential zoning district. Within areas zoned planned development district, or property in any district upon which a special use permit has been issued, such advertising signs shall only be permitted if specifically authorized upon the final development plan or permit approval.

(2) **Area and height**:

(a) The maximum area for any one sign shall not exceed 576 sq. ft. in size per face excluding extensions and embellishments, with a maximum length of 48’ inclusive of border and trim, but excluding the base, apron, supports and other structural members.

(b) Extensions to the top of advertising signs are permitted. However, in no case shall any extension exceed 96 sq. ft. in total area or extended more than 5-1/2’ in height above top of said sign. Other extensions are permitted as follows: Side extension - 2’ on each side; bottom extension -1’.

(c) The maximum height shall not exceed 40’ from the highest point on the sign to surrounding grade or street level, whichever is higher. The minimum height from the surrounding grade shall be 7’, unless attached to the side of a building.

(d) The maximum size limitations shall apply to each side of a sign structure, and signs may be placed back to back, side by side or stacked, so long as they do not exceed the maximum height limitation specified above.

(3) **Location**:

(a) No such sign shall be erected within 500 lineal feet of an existing standard outdoor advertising structure, off premises poster panel and/or billboard sign on the same side of the street.

(b) No such sign shall be located within 100 lineal feet of a lot line of a residentially zoned property or a single family residence, regardless of zoning districts.

(c) No sign shall be located in such a manner as to obstruct or otherwise physically interfere with the effectiveness of an official traffic sign, signal or device or obstruct or physically interfere with a motor vehicle operator's view of approaching, merging or intersecting traffic.

(d) No such sign shall be so located to obstruct the vision of traffic using entrance ways, driveways or any public road intersection.

(e) The minimum front yard setback for a free standing sign shall be a minimum of 10’ from any public right-of-way, and/or private roadway easement, or the minimum setback building requirements as provided by this Code, whichever is more restrictive.

(f) No sign shall be located on any public or private utility easement, road, drainage easement.

(g) All lineal distances required by this Section shall be measured from the nearest outside edge of the subject sign, whether a support, structural member or the sign surface itself, to the nearest outside edge of the corresponding sign, building, right-of-way or easement involved.

(4) **Prohibited signs**:

(a) Roof-mounted signs.

(b) Flashing signs.

(c) Pinwheels, pennants, streamers and banners.

(d) Moving signs or swinging signs

(e) Signs which contain characters cartoons that contain statements, words or pictures of an obscene, indecent, prurient or immoral character.

(f) Signs which contain or are an imitation of an official traffic sign or signal or which are of a size, location, movement, content, coloring or manner of illumination which may be confused with, or construed as, a traffic control device, or which may hide from view any traffic or street sign or signal.

(g) Any sign constructed or located in such a manner such that it becomes an immediate hazard or danger to persons or property because of being in an unsafe condition, or which obstructs any view, window, door or fire escape of an adjacent building. Such signs will be subject to immediate removal by the Building Inspector or his designee, without notice at the expense of the property owners.

(5) All signs and sign supports shall be maintained in good repair so as to prevent rust, peeling, flaking or fading. Broken panels, missing letters, flaking or peeling paint and other visual damage to a sign shall be repaired within 45 days of occurrence or within 30 days notification by the Building Inspector or his designee.

(6) **Illumination**: Neither the direct nor reflected light from primary light sources shall create a traffic hazard to operators of motor vehicles on public thoroughfares, nor shall the light sources be oriented such that either direct or reflected light creates a nuisance to adjoining properties.

(7) **Plan required**: An application to elect such a sign shall be accompanied by the following:

(a) A set of plans, provided by owner of the sign or structural engineer, or architect providing all necessary construction and electrical details of the sign and sign structure, including a representation of the proposed sign, including the width and length of the sign faces, and height from surrounding grade and wind load as provided in said Section 8 below.

(b) A site plan containing:

1.) The proposed location of the sign upon the property.

2.) The distance from the proposed sign location to any building(s) upon the property, and adjoining street right-of-way lines and driveway entrances.

3.) The distance from the proposed sign location to the next nearest billboard sign on either side of the street in either direction.

4.) The distance from the proposed sign location to the nearest street intersection in either direction.

(8) **Construction specifications**: Any structural sign erected under this ordinance shall be a pedestal type, consisting of not more than five (5) posts or ground supports. Construction of the sign and material specification shall comply with the structural requirements of the BOCA Building Code as adopted and incorporated in this Code.

ARTICLE XV SITE PLAN REVIEW

Section 29.1501 <u>Intent</u> --- Site plan review and approval of all development proposal districts shall be required as provided in this Section. The intent of this Section is to provide for consultation and cooperation between the developer and the city so that both parties might realize maximum utilization of land and minimum adverse effect upon the surrounding land uses. Through the application of the following provisions, the attainment of the comprehensive plan will be assured and the city will develop in an orderly fashion.

29.1502 <u>Site plan review required</u> --- A site plan shall be submitted to the Department of Planning and Development for review and approval for the following:

(1) Any permitted use or special use within the city, except one-family detached and two-family dwellings and their accessory buildings and uses.

(2) Any addition to an existing principal or accessory building within the city, except one-family detached dwellings and two-family dwellings and their accessory buildings and uses.

(3) In the neighborhood residential districts (NR1 and NR2) the required plat may be substituted for a site plan.

(4) Any off premise sign.

29.1503 <u>Site plan review standards</u> --- The site plan shall be reviewed by the City Engineer and Director of Planning and Development and approved upon finding that the following objectives are met:

(1) The proposed design will not be injurious to the surrounding neighborhood or impede the normal and orderly development of surrounding property for uses permitted by the zoning ordinance.

(2) There will be a proper relationship between streets, sidewalks, service drives. driveways and parking areas protecting the safety of pedestrians and motorists.

(3) The location of buildings, outside storage receptacles, parking areas, screen walls and utility areas is such that the adverse effects of such uses will be minimized for occupants of that use and the occupants of surrounding areas.

(4) City requirement and standards for streets, lighting, driveway approaches, grading, surface drainage storm sewers and necessary easements will be met.

(5) All buildings or groups of buildings will be so arranged as to permit emergency vehicle access of some practical means.

(6) Sites which include storage of hazardous materials or waste fuels, salt or chemicals will be designed to prevent spills and discharges of polluting materials to the surface of the ground, ground water or nearby water bodies.

(7) Landscaping, including greenbelts, trees, shrubs and other vegetative materials, is provided to maintain and improve the aesthetic quality of the site and the area.

(8) The proposed use is in compliance with these zoning ordinances and the location of buildings, outside storage receptacles, parking areas, screen walls and utility area is such that the adverse effects of such uses will be minimized for the occupants of that use and the occupants of surrounding areas.

(9) The street side facades of all buildings constructed or rehabilitated within the Downtown Zoning Districts are in compliance with these zoning ordinances and be so designed to minimize any adverse effects on adjoining properties.

29.1504 **<u>Information required on site plan</u>** --- A site plan submitted for review and approval shall contain all of the following data prior to its submission to the Department of Planning and Development for review and approval:

(1) **General information**:

(a) Plans drawn to scale of not less than one inch equals fifty feet for property less than three acres or more:

(b) The proprietors', applicants' and owners' names, addresses and telephone numbers:

(c) The date (month, day, year), title block, scale and northpoint;

(d) The name, address and professional seal of the architect, engineer, surveyor, landscape architect or planner responsible for the preparation of the plan;

(e) The zoning district classification of the petitioner's parcel and all abutting parcels;

(f) Pertinent area, height, lot coverage and set back requirements of the zoning district in which the parcel is located;

(g) A legal description, including a gross acreage figure; and

(h) Building elevations for all structures rehabilitated or constructed within the Downtown Zoning Districts;

(2) **Physical features**:

(a) Existing and proposed lot lines, building lines, structures and parking areas on the parcel and within 100 feet of the site; and

(b) The location of existing and proposed traffic and pedestrian circulation facilities, including:

1.) Centerline existing and proposed right-of-way lines of abutting streets;
2.) Access drives;
3.) Service drives;
4.) Fire lanes;
5.) Street intersections;
6.) Acceleration, deceleration and passing lanes and approaches;
7.) Sidewalks and pedestrian paths; and
8.) Curbing.

(c) The location of existing and proposed service facilities above and below ground including:

1.) Chemical and fuel storage tanks and containers;
2.) Storage, loading and disposal areas of chemicals, hazardous substances, salt and fuels;
3.) Water mains, hydrants, pump houses, standpipes and building services and sizes;
4.) Sanitary sewers and pumping stations;
5.) Stormwater control facilities and structures, including storm sewers, swales, retention/detention basins, drainage ways and other facilities, including calculations for sizes;
6.) The location of all existing and proposed easements;
7.) Public utility distribution systems; and
8.) Wells, cistern, septic tanks, laterals.

(d) Dimensioned flood plains, finished floor elevations, typical elevation views and specifications of building materials of all buildings;

(e) Dimensioned parking spaces and calculations, drives and type of surfacing;

(f) Exterior lighting locations, type of light and illumination patterns;

(g) The location and description of all existing and proposed landscaping. berms, fencing and walls;

(h) The trash receptacle pad location and the method of screening;

(i) The transformer pad location and the method of screening;

(j) Sign locations, height and size; and

(k) Any other pertinent physical futures.

(3) **Natural features**:

(a) For parcels of more than one acre, existing and proposed topography with a maximum contour interval of two feet on the site and beyond the site for a distance of 100 feet in all directions;

(b) The location of existing drainage courses and associated bodies of water, on and off site, and their elevations; and

(c) The location of natural resource features, including wetlands and woodlands.

(4) Additional requirements for R3, NR1 and NR2 districts.

(a) Density calculations by type of unit;

(b) Designation of units by type all number of units in each building;

(c) Carport locations and details where proposed; and

(d) Details of community building and recreational facilities.

(5) Additional requirements for C1A, C1B, C2, C3, D1, D2, D3, D4, D5, M1, M2 and M3 districts.

(a) Loading/unloading areas;

(b) Total and useable floor area; and

(c) Number of employees, customers, clients or patients in peak usage.

29.1505 <u>Application procedure</u> --- An application for site plan review shall be processed in the following manner:

(1) All site plans shall be submitted to the inspection office and must contain the following to be accepted:

(a) A completed application signed by the owner. If the owner is a corporation, the application must be signed by a corporate officer. If the owner is a partnership, the application must be signed by a general partner. If the owner is an individual, each individual owner must sign the application;

(b) Sufficient copies of the site plan as determined by the department;

(c) All items required by Subsection (c) hereof; and

(d) Required site plan fees;

1.) Site plan application fee (nonrefundable). An application fee shall be charged for all projects requiring site plan reviews pursuant to Subsection (a) hereof. Said fee shall be paid prior to staff site plan review.

The fee shall be a minimum of $50 plus an additional $5 for every acre beyond the first acre.

(2) Upon receipt of the site plan, the department shall:

(a) Forward a copy of the site plat and application to the appropriate city departments, for review; and

(b) Schedule a meeting with the applicant and applicable staff;

1.) Upon a determination that a site plan is in compliance with these codified ordinances, the site plan shall be approved; and

2.) Upon determination of non-compliance, staff shall write "denied" on the plan and reasons for denial indicated in a letter to the applicant.

29.1506 **Security for performance and execution of site plan** --- As a condition of approval of the site plan, the developer shall provide security to the Director of Planning and Development to assure execution and completion of the development according to the approve site plan. Such security shall be in an amount sufficient to off-set the costs of completing the improvements set forth in the site plan and may include the deposit of certified funds into an escrow account with a lending institution authorized to conduct business in the State of Illinois as escrow agent, or issuance of an irrevocable standby letter of credit from an institution authorized to conduct banking business in the State of Illinois, or such other security as may be agreed upon by the Director of Planning and Development and the developer. In the event the developer fails or refuses to execute and complete the improvements as specified in the site plan, the City of Quincy, through the Director of Planning and Development, shall be permitted to enter upon the site and take appropriate action to complete the site plan improvements, drawing such funds as are necessary as an authorized payee under the respective security arrangement chosen by the developer and accepted by the Director of Planning and Development.

CHAPTER 30

MISCELLANEOUS REGULATIONS

ARTICLE I	**EXPLOSIVES AND FIREWORKS**
ARTICLE II	**TOBACCO REGULATIONS/MINORS**
ARTICLE III	**TAG DAYS**
ARTICLE IV	**CURFEW**
ARTICLE V	**PUBLIC BUILDINGS**
ARTICLE VI	**PUBLIC GATHERINGS**
ARTICLE VII	**SOUND AMPLIFIERS**
ARTICLE VIII	**ZONE OF QUIET**
ARTICLE IX	**RECEIPTS FOR MONEY**
ARTICLE X	**FAIR HOUSING**

ARTICLE I EXPLOSIVES AND FIREWORKS

Section 30.101 Fireworks ---

(1)It shall be unlawful to possess, discharge, set off, light, activate or ignit fireworks or to give any pyrotechnic display utilizing any type of firework in the city except by a person or firm duly licensed under the provisions of the Illinois Explosives Act or by a person or firm deemed by the Fire Chief to possess the expertise and judgment sufficient to conduct such display in safety.

(a)"Fireworks" when used in this subpart (1) of this Section 30.101 shall mean and include any explosive composition, or any substance or combination of substances, or article prepared for the purpose of producing a visible or audible effect of a temporary exhibitional nature by explosion, combustion, deflagration or detonation, and shall include blank cartridges, toy cannons, in which explosives are used, the type of balloons which require fire underneath to propel the same, firecrackers, torpedoes, skyrockets, roman candles, bombs, or other fireworks of like construction and any fireworks containing any explosive compound or any tablets or other device containing any explosive substance, or containing combustible substances producing visual effects; provided, however, that the term "fireworks" shall not include snake or glow worm pellets; smoke devices; trick noisemakers known as "party poppers", "booby traps", "snappers", "trick matches", "cigarette loads" and "auto burglar alarms"; sparklers, toy pistols, toy canes, toy guns, or other devices in which paper or plastic caps containing twenty-five hundredths grains or less of explosive compound are used, providing they are so constructed that the hand cannot come in contact with the cap when in place for the explosion; and toy pistol paper or plastic caps which contain less than twenty hundredths grains.

(b) The definition of fireworks set forth in subparagraph 30.101(1)(a), above, shall not apply to subpart (2) of this Section 30.101.

(2) It shall be unlawful to sell fireworks or pyrotechnic displays in the city.

(a) Fireworks when used in this subpart (2) of this Section 30.101 shall be defined the same as in the BOCA Building Code as adopted by the city.

(b) The definition of fireworks set forth in subparagraph 30.101(2)(a), above, shall not apply to subpart (1) of this Section 30.101.

30.102 No smoking --- It shall be unlawful for any person in charge of such public displays to smoke any lighted pipe, cigarette or cigar at any time during which such public display is going on or in the vicinity of materials to be used for such displays.

30.103 Manufacturing prohibited --- It shall be unlawful for any person, firm or corporation to manufacture any fireworks in the city.

30.104 Bond --- No such permit shall be issued unless the applicant therefore has filed with the City Clerk a public liability bond in policy bond in the sum of five thousand dollars ($5,000.00) conditioned to pay any damage to property or injury to persons that may result or accrue from the storage, handling or display of such pyrotechnics.

30.105 Nitro-glycerin - T.N.T. --- It shall be unlawful to keep or store any nitro-glycerin or the explosive commonly known as T.N.T. in the city in any quantities, excepting for

medicinal or laboratory purposes and for such purposes no more than one quarter ounce shall be stored in any one building or premises.

30.106 Storage rules --- All explosives must be stored or kept in accordance with the rules of the State Fire Marshal, subject to the provisions of this Article.

30.107 Dynamite --- It shall be unlawful to keep or store any dynamite in the city in excess of five (5) pounds on any one premises or in any building.

30.108 Gunpowder --- It shall be unlawful to keep or store any black powder or gunpowder or guncotton in excess of five (5) pounds on any one premise in the city.

30.109 License required: No fireworks or pyrotechnical displays involving firework shall be displayed, discharged or utilized as part of a live performance before a public gathering in the City of Quincy or a public place in the City of Quincy unless performed under the direction and control of a person or firm licensed under the provisions of the Illinois Explosives Act or by a person or firm deemed by the Fire Chief to possess the expertise and judgment sufficient to conduct such display in safety.

30.110 Permit required: No fireworks or pyrotechnical displays involving fireworks shall be displayed, discharged or utilized as part of a live performance before a public gathering in the City of Quincy or at a public place in the City of Quincy unless pursuant to permit issued by the city council upon recommendation of the Fire Chief. The Fire Chief of the City of Quincy shall adopt reasonable rule, and regulations, consistent with the Fireworks Use Act of the State of Illinois, setting forth the conditions for issuance of permits and the conduct of fireworks and pyrotechnical displays. Such rules and regulations shall be published in pamphlet form and made readily available to the general public by the office of the Fire Chief. A reasonable permit fee shall be charged for each permit application.

30.111 Public gathering and public place defined: For purposes of this article, a public gathering shall be any function open to the public, whether indoors or outdoors, and whether by free admission, invitation or by ticket. Public places shall include any indoor or outdoor venue where any type of fireworks or pyrotechnical display is to be exhibited and viewed by the public.

30.112 Penalty --- Any person, firm or corporation who violates any of the provisions of this title shall, in addition to such other relief as the law may afford, be punishable as set forth in Chapter 32 of this Code.

ARTICLE II TOBACCO REGULATIONS - MINORS

Section 30.201 <u>Definitions</u> ---

Person: "Person" as used herein shall include any natural person, partnership, limited liability company, corporation, company or other business or entity, or the manager, agent, officer or employee of any of them.

Tobacco products: "Tobacco products" as used herein shall include cigarettes, cigar, smokeless tobacco or other tobacco products.

Tobacco vendor: "Tobacco vendor" as used herein shall mean any person engaged in the business of selling tobacco products at retail in the City of Quincy.

30.202 <u>Tobacco vendor prohibitions and requirements, (sale to minors prohibited</u>

(1) **Prohibited sales and delivery**: It shall be unlawful for any person, including any tobacco vendor to sell, offer for sale, give away or deliver tobacco products to any person under the age of eighteen (18) years.

(2) **Proximity to certain institutions**: It shall be unlawful for any person to sell, offer for sale, give away or deliver tobacco products within one hundred (100) feet of any school, child care facility or other building used for education or recreational programs for persons under the age of eighteen (18) years. Notwithstanding the foregoing, this provision shall not apply to any sale or offer of sale by a tobacco vendor or tobacco vendor's successors or assigns who is, prior to the effective date of this ordinance, lawfully engaged in the business of the retail sale of tobacco products at a location which is within one hundred (100) feet of such school facility or building.

(3) **Certain free distributions prohibited**: It shall be unlawful for any tobacco vendor or any person in the business of selling or otherwise distributing, promoting or advertising tobacco products, or any employee or agent of any such tobacco vendor or person, in the course of such tobacco vendor's or person's business, to distribute, give away or deliver tobacco products free charge to any person on any right-of-way, park playground or other property owned by the city, and school district, any park district or an public library.

(4) **Penalty**: Any person, firm or corporation who violates any of the provisions of this title shall, in addition to such other relief as the law may afford, be punishable as set forth in Chapter 32 of this Code.

30.203 <u>Purchase by minor prohibited</u> ---

(1) **Generally**: It shall be unlawful for any person under the age of eighteen (18) years to purchase tobacco products, or to misrepresent their identity or age, or the use of any false or altered identification for the purpose of purchasing tobacco products.

(2) **Penalty**: Any person, firm or corporation who violates any of the provisions of this title shall, in addition to such other relief as the law may afford, be punishable as set forth in Chapter 32 of this Code.

30.204 <u>Possession by minor prohibited</u> ---

(1) **Generally**: It shall be unlawful for any person under the age of eighteen (18) years to possess any tobacco products; provided that the possession by a person under the age of eighteen (18) years is under the direct supervision of the parent or guardian of such person in the privacy of the parent's or guardian's home shall not be prohibited.

(2) **Penalty**: Any person, firm or corporation who violates any of the provisions of this title shall, in addition to such other relief as the law may afford, be punishable as set north in Chapter 32 of this Code.

ARTICLE III TAG DAY

Section 30.301 **Permit required** --- It shall be unlawful for any person, firm or corporation to publicly solicit, either in person or by agent, upon the streets or other public place in the city; subscriptions for charitable or religious or educational or other organizations for purposes, without having first secured a permit therefore.

30.302 **Applications** --- Applications for such permits shall be made to the City Clerk and shall be referred to a committee appointed by the Council for this purpose; and no such permit shall be issued except upon order of the Council.

30.303 **Penalty** --- Any person, firm or corporation who violates any of the provisions of this title shall, in addition to such other relief as the law may afford, be punishable as set forth in Chapter 32 of this Code.

ARTICLE IV CURFEW

Section 30.401 **Children on streets at night** --- It is unlawful for a person less than 17 years of age to be present at or upon any public assembly, building, place, street or highway at the following times unless accompanied and supervised by a parent, legal guardian or other responsible companion at least 18 years of age approved by a parent or legal guardian or unless engaged in a business or occupation which the laws of the State of Illinois authorize a person less than 17 years of age to perform:

(1) Between 12:01 a.m. and 6:00 a.m. Saturday;

(2) Between 12:01 a.m. and 6:00 a.m. Sunday; and,

(3) Between 11:00 p.m. on Sunday to Thursday, inclusive, and 6:00 a.m. on the following day.

30.402 **Permitting violation of curfew** --- It is unlawful for a parent, legal guardian or other person in charge of a child to knowingly permit such child in his or her custody or control to violate Section 30.401. A parent, legal guardian or other person in charge of such child shall be rebuttably presumed to having knowingly permitted violation if such child shall again violate the provisions of Section 30.401 after the parent, legal guardian or other person shall have received notice of a prior violation thereof by such child. A parent, legal guardian or other person shall be deemed to have been given notice, in addition to other reasonable methods or forms of notice, by having picked up the child retained for a curfew violation, having signed an acknowledgement of notice, having been notified in writing by the arresting officer or by having appeared in court with the child, if the child is ultimately found guilty or if the child pleads guilty and is placed on supervision, irrespective of whether guilty and whether the cause is then dismissed.
Substantial necessity shall be a defense to the provisions of this Section.

30.403 **Detaining child** --- Every member of the police force while on duty is hereby authorized to detain any such minor violating the provisions of the first section of this Article until the parent or guardian of the child shall take him or her into custody; but such officer shall immediately upon taking custody of the child communicate or attempt to communicate with the parent or guardian.

30.404 **Delinquent or mendicant children** --- If it shall appear that any child taken into custody for a violation of the first section of this Article is growing up in mendicancy or vagrancy, or is incorrigible, for lack of proper parental care or has no home, proper proceedings shall be taken to have such child made a ward of the court or to have other appropriate proceedings initiated.

30.405 **Penalty** --- Any person, firm or corporation who or which violates any of the provisions of this title shall, in addition to such other relief as the law may afford, be punishable as set forth in Chapter 32 of this Code.

ARTICLE V PUBLIC BUILDINGS

Section 30.501 <u>Responsibility</u> --- The owner, agent or occupant or person charged with the custody of any public building, auditorium, hotel, theater, lodge hall, or church and in the case of schools, the superintendent of public schools, the person in charge of any parochial school and the owner of any private school shall be held liable for the installation and maintenance of such equipment and apparatus as is required in this Article and for the safety of all exits, stairs, doors, windows or passageways.

30.502 <u>Enforcement</u> --- It shall be the duty of the Fire Chief or his assistants to inspect all apparatus to be installed and the location thereof, and to make or cause to be made periodic inspections of the operation and accessibility of regular and emergency exits in all such public places.

30.503 <u>Location and number of appliances</u> -- The location and number of fire appliances shall be as follows (unless other location shall be more accessible and convenient for protection against fires).

(1) **Theaters**:

(a) **Stage**: two one-quart chemical hand extinguishers one to be installed on each side of the stage; one two and one-half gallon (2-1/2) chemical hand extinguisher, readily accessible; one five (5) gallon pump; one fire axe.

(b) **Foyer**: two one quart chemical hand extinguisher or five (5) gallon hand pump.

(2) **Public buildings, auditoriums, lodge halls and hotels**: one five (5) gallon hand pump and fire axe at or near the main entrance on the ground floor; one five (5) gallon hand pump at or near the foot of all basement stairways; two water pails in boiler room unless an oil burner is used, in which case a two and one-half (2-1/2) gallon special chemical hand extinguisher shall be kept just outside the boiler room door; a one quart chemical hand extinguisher on the stage; and a one quart chemical hand extinguisher in the lobby.

(3) **Churches**: One five (5) gallon pump at or near main entrance on ground floor; one five (5) gallon hand pump and fire axe in boiler room.

(4) **Schools**: One five (5) gallon hand pump and fire axe at or near:

(a) The main entrance on the ground floor;

(b) At head of each stairway;

(c) Same in the boiler room.

30.504 <u>Fire drills</u> --- It shall be the duty, of the principal or other person in charge of the pupils in every school in the city to establish and maintain a good and efficient fire drill which shall be practiced at least twice a month during the time the building is used for school purposes. A written report shall be made to the Fire Chief by the principal or person in charge of such building of each fire drill held, and of the time elapsed from the first fire signal until the last person was out.

30.505 <u>Removal</u> --- It shall be unlawful to remove from its proper place any fire apparatus or appliance except for inspection or in case of emergency.

30.506 Doors --- All public buildings which may be or are used for church, school, theater, lecture room, hotel, public meeting or similar purposes, or which may be or are used for the assemblage of people for worship, amusement or instruction and all buildings used for stores to which the public is invited shall be so built that all doors leading from the main hall or place of assembly shall open outwards.

No doors leading from any such building shall be locked so as to prevent egress, and the inside of each such door in any church, theater, auditorium, lodge hall, or school shall be quipped with a panic bar or device to permit easy and quick opening of such door from the inside at all times.

All means of egress for person within public building shall be by means of doors which shall open outwards from the main hall and from the building.

30.507 Exit lights --- In all theaters and public meeting halls a red light, illuminating the word "EXIT" shall be kept burning over each regular and emergency exit while the theater or hall is occupied by an audience or by patrons.

30.508 Fire Suppression Systems: All persons required to install equipment and apparatus under section 30.501 of this article, as well all businesses required to maintain fire alarms, fire detection systems and hood suppression systems under this code shall submit to the Quincy Fire Department a certificate of inspection on an annual basis, with hood suppression systems required to be certified every six (6) months. Such inspections must be performed by persons or firms identified by the Fire Chief as qualified to perform such inspections and such inspections shall be recorded on a standardized form provided by the Fire Chief, or in substantial compliance with such form.

30.509 Penalty --- Any person, firm or corporation who violates any of the provisions of this title shall, in addition to such other relief as the law may afford, be punishable as set forth in Chapter 32 of this Code.

ARTICLE VI PUBLIC GATHERING

Section 30.601 Regulations --- It shall be unlawful to hold, manage or conduct any meeting or entertainment of any kind in the municipality in any premises other than a building constructed in full compliance with the ordinances and laws pertaining thereto for auditorium, theater, or lodge room purposes, excepting in compliance with the provisions of this Article.

30.602 Inspections --- No such gatherings or entertainment shall be held or presented in any premises other than a building as described in the preceding Section, unless such premises have been examined by the Fire Chief or Building Inspector not more than three (3) days before the date of such gathering and found to be free of any fire hazard and found to be suitable for the purpose. No structure enclosed by a roof shall be used for the purpose unless the same is constructed of non-flammable materials; provided that tents or structures covered by canvas or similar material may be so used if such canvas or other material has been properly treated so as to be rendered fire resistive.

30.603 Exits --- Adequate unobstructed exits shall be provided in all premises used for such purposes to permit rapid egress of all persons attending, and there shall be at least two (2) separate exits located at least thirty (30) feet from each other. There shall be two (2) lineal feet of doorway or exit space for each one hundred (100) people accommodated.

30.604 Seats --- Any stands or rows of seats used in such premises shall be so constructed as to be safe for the use designed, and shall be sufficiently strong to carry the same weight and stress as is required for the construction of the auditorium floors of theater buildings, not less than one hundred (100) pounds per square foot.

It shall be unlawful to admit to any such premises a number of persons to exceed the number of actual seats maintained for their accommodation.

30.605 Doors --- All doors or gates on exits from premises used for such purposes shall open outward and no such exit shall be so constructed or locked that egress from inside the premises is blocked.

30.606 Notice --- It shall be the duty of any person or persons conducting, calling for or managing any gathering in any premises other than a theater, lodge room or auditorium building constructed as provided in the first paragraph of this Article to notify the Fire Chief of the date of such intended use at least ten (10) days before such meeting is to take place; upon such notice the Fire Chief or the Building Inspector shall inspect the premises to determine whether or not they comply with the provisions hereof. Any permit issued for any such gathering shall be subject to the condition that this Article be fully complied with, whether or not such condition is embodied in such permit.

30.607 Penalty --- Any person, firm or corporation who violates any of the provisions of this title shall, in addition to such other relief as the law may afford, be punishable a set forth in Chapter 32 of this Code.

ARTICLE VII SOUND AMPLIFIERS

Section 30.701 **Permit required** --- It shall be unlawful to operate on the streets any mobile loud speaker or amplifier connected with any radio, microphone, phonograph or any other mechanism or device for the intensification or magnification of the human voice or of any other sound which may be heard over any public street or public place with out first having secured a license therefore.

30.702 **Fees** --- The fee for such permits shall be:

Annual license	$50.00
Six months	$30.00
One week	$10.00
One day	$ 5.00

30.703 **Application** --- Any person, firm or corporation desiring a license for the use or operation of such a device shall file an application therefore with the City Clerk upon a form provided by him setting forth the name and address of the applicant, the name of the owner of such device, the date upon which it is intended to be used, and such other information as may be prescribed. Such license shall be issued upon payment of the license fee, as above provided, to the City Clerk and shall permit the use of any such device subject to the terms and conditions of this Section only upon the date specified in such license and no other.

30.704 **Regulations** --- No licensee shall use, operate or employ any such device within the city limits on Sundays or after the hour of eight o'clock p.m. prevailing time, of any day, or before the hour of eight o'clock a.m. prevailing time, of any day; no licensee shall use, operate or employ such device within a radius of two (2) blocks from any church while funeral services are being held, nor within two (2) blocks of any hospital.

This Section shall not apply to radios in private pleasure vehicles when the same are operated in such a manner as not to be audible at a distance of fifty (50) feet from such vehicle, nor to noise devices, bands or other musical devices used in any public parade or procession which is operated under a permit in accordance with the ordinances of this city.

No licensee shall cause or permit to be emanated or emitted from any such device any lewd, obscene, profane, or indecent language or sounds, or any false representation of any matter, produced or project advertised thereby the same of which is prohibited by any law, ordinance or statute.

No licensee shall amplify sound to a volume so that such sound is audible to a person of normal hearing for a distance of more than one twelfth (1/12) of a mile.

30.705 **Penalty** --- Any person, firm or corporation who violates any of the provisions of this title shall, in addition to such other relief as the law may afford, be punishable as set forth in Chapter 32 of this Code.

ARTICLE VIII ZONE OF QUIET

Section 30.801 **Creation** --- There is hereby established a zone of quiet in all territory embraced within a distance of two hundred (200) feet, measured from the nearest point from the hospital building of every hospital in the city.

30.802 **Noises by motor vehicles** --- It shall be unlawful for any motor vehicle to pass through said zone with a muffler or exhaust pipe open, or for the driver thereof to blow a whistle or horn, or ring a bell, while passing in or through said zone, except to prevent an apparent accident, or to make any other unnecessary or unusual noise, or for the driver of any bus to sound its horn while in or passing through said zone, except to prevent an apparent accident.

30.803 **Unnecessary noises** --- It shall be unlawful for any person or persons to make, or cause to be made, any unnecessary noise within any such zone of quiet, which disturbs or tends to disturb any inmates of the hospital located therein.

30.804 **Signs** --- It shall be the duty of the Superintendent of Public Works to place at some conspicuous place on every street within any such zone of quiet, and at a distance of approximately two hundred (200) feet in each direction from any hospital located therein, signs displaying the words "NOTICE - ZONE OF QUIET".

30.805 **Penalty** --- Any person, firm or corporation who violates any of the provisions of this title shall, in addition to such other relief as the law may afford, be punishable as set forth in Chapter 32 of this Code.

ARTICLE IX RECEIPTS FOR MONEY

Section 30.901 <u>Receipts for money</u> --- All city officials and employees receiving money payments on behalf of the city shall keep a record thereof on serially numbered receipts from a receipt billing machine, one copy of which receipt shall be given to the person making the payment and the duplicate copy of which shall be retained in a locked compartment of said billing machine. The duplicate, serially numbered copies verify the various amounts evidenced thereby against the moneys turned into the office of the City Treasurer; provided however, that licenses and permits may be issued either from such billing machines or from permanently bound books with each license or permit serially numbered in duplicate or detachable from permanently bound and serially numbered receipt record stubs.

ARTICLE X FAIR HOUSING

Section 30.1001 <u>Preamble</u> ---

(1) **Policy**: It is hereby declared the policy of the City of Quincy to assure full and equal opportunity to all residents of the city to obtain fair and adequate housing for themselves and their families in the city, without discrimination against them because of their race, color, religion, national origin or ancestry. It s further declared to be the policy of the city that no owner, lessee, sublessee, assignee, managing agent, or other person, firm or corporation having the right to sell, rent or lease any housing accommodation, within the city, or any agent of any of these should refuse to sell, rent lease, or otherwise deny to or withhold from any person or group of persons such housing accommodations because of the race, color, religion, national origin or ancestry of such person or persons or discriminate against any person because of his race, color, religion, national origin or ancestry in the terms, conditions, or privileges of the sale, rental or lease of any housing accommodation or in the furnishing of facilities or services in connection therewith. This Article serves to effectuate this policy and to eliminate as far as legislatively permissible, all forms of discrimination and segregation in the field of housing predicated upon race, color, religion, or national origin or ancestry.

(2) **Unfair practices**: It shall be an unfair housing practice and unlawful for any licensed real estate broker or licensed real estate salesman:

(a) To make any distinction, discrimination or restriction against any person in the price, terms, conditions or privileges relating to the sale, rental, lease or occupancy of any real estate used for residential purposes in the city or in the furnishing of any facilities or services in connection therewith, predicted upon the race, color, religion, national origin or ancestry of the prospective or actual buyer or tenant thereof.

(b) To publish, circulate, issue or display, or cause to be published, circulated, issued or displayed, my communication, notice, advertisement, sign or other writing relating to the sale, rental or leasing of any residential real property within the city which will indicate or express any discrimination in the sale, rental or leasing of such residential real estate, predicated upon the race, color, religion or the national origin or ancestry of any prospective buyer, lessee or renter of such property.

(c) To refuse to sell, lease or rent any real estate for residential purposes within the city because of the race, color, religion, national origin or ancestry of the proposed buyer or renter.

(d) To cheat, exploit or overcharge any person for residential housing accommodations in the city because of the race, color, religion or national origin or ancestry.

(e) To solicit for sale, lease or fisting for sale or lease, residential real estate within the city on the ground of loss of value due to the present or prospective entry into any neighborhood of any person or persons of any particular race, color, religion or national origin or ancestry.

(f) To distribute or cause to be distributed, written material or statements designed to induce any owner of residential real estate in the city to sell or lease his property because of any present or prospective change in the race, color, religion or national origin or ancestry of persons in the neighborhood.

(g) To deliberately and knowingly refuse examination of any listing of residential real estate within the city to any person because of race, color, religion or

national origin or ancestry, provided the listing or listings are those of the broker complained against, or are those of the broker in whose firm the broker or salesman complained against is employed.

30.1002 <u>Duties of commission</u> --- It shall be the duty of the Commission on Equal Opportunity to:

(1) Receive, assist with and investigate complaints charging unlawful housing practices;

(2) Seek conciliation of such complaints, hold hearings, make findings of fact, issue orders and publish its findings of fact and orders in accordance with the provisions of this ordinance and with the ordinance establishing the commission;

(3) Render from time to time, but not less than once a year, a written report of its activities and recommendations with respect to fair housing practices to the Mayor and to the City Council; and

(4) Adopt rules and regulations as may be necessary to carry out the purposes and provisions of this ordinance, upon approval of the City Council.

30.1003 <u>Complaints</u> ---

(1) Any person aggrieved by any violation of any provision of this ordinance may file a written complaint in triplicate setting forth his grievance with the City Clerk. Said complaint shall state the name and address of the complainant and of the persons against whom the complaint is brought and shall also state the alleged facts surrounding the alleged violation of this ordinance.

(2) Each complaint shall be accompanied with a filing fee of $25.00. The City Clerk shall immediately transmit a copy of the complaint to the Equal Opportunity Commission and copies of the complaint to each person against whom the complaint is brought. If in accordance with the procedures hereinafter set forth, the Commission shall determine that probable cause exists for the complaint, or if any of the charges alleged in the complaint are sustained and the person is fined or the alleged violation complained of is eliminated by conference, conciliation and persuasion, the City Clerk shall remit the filing fee to the complainant. If it is found and determined probable cause does not exist for the complaint, or if the charges alleged in the complaint are not sustained, the filing fee shall be retained by the city.

30.1004 <u>Authority of commission</u> --- The Commission is hereby authorized immediately to investigate every such complaint thus filed. If the Commission determines that the respondent has not engaged in any lawful practice, it shall state its findings of fact in writing and dismiss the complaint. If the Commission determines after such investigation that probable cause exists for the allegations made in the complaint, the Commission shall set a date for a conciliation hearing. At such hearing the Commission shall interview the complainant and the person or persons against whom the complaint has been directed and shall attempt to resolve the complaint by all proper methods of conciliation and persuasion. If such attempts at conciliation are not successful and within sixty (60) days after the date of filing of the complaint, the Commission shall then proceed promptly with hearing of the complaint.

30.1005 Hearing --- Such hearing shall be conducted by the Commission, or a committee of at least five commission members upon due and reasonable notice to all parties. The Commission or committee shall have power to administer oaths and to take sworn testimony. At the conclusion of the hearing, the Commission shall render a written report and recommendations, which shall be served by mail upon the complainant and the respondent. No report shall be delayed more than sixty (60) days after the date of the issuance of notice for commencement of the first hearing.

30.1006 Prosecution --- The Commission shall be empowered at the conclusion of such proceedings and as part of its report, to present evidence of violation of this ordinance to the City Attorney of the City of Quincy, and the City Attorney is hereby authorized to bring appropriate actions in the name of the city for violation of the terms of this Article.

30.1007 License --- In addition thereto, the Mayor may direct the Corporation Counsel to file with the Department of Registration and Education of the State of Illinois a complaint against any licensed real estate broker or licensed real estate salesman found guilty of violating any provision of this Article, seeking suspension or revocation of the license issued to such broker by the State of Illinois.

30.1008 Invalidity --- If any section, subdivision, paragraph, sentence or clause of this Article is for any reason held to be invalid or unconstitutional, such decision shall not affect any remaining portion, section or part thereof.

30.1009 Penalty --- Any person, firm or corporation who violates any of the provisions of this title shall, in addition to such other relief as the law may afford, be punishable as set forth in Chapter 32 of this Code.

CHAPTER 31

PUBLIC PEACE, MORALS AND WELFARE

ARTICLE I MISCELLANEOUS OFFENSES

ARTICLE II VANDALISM

ARTICLE I MISCELLANEOUS OFFENSES

Section 31.101 **Peace disturbance** --- It shall be unlawful for any person to be guilty of any conduct which shall breach the peace. The causing or making of any unnecessary loud noise or shouting or yelling shall be considered to be peace disturbance.

31.102 **Intoxication** --- It shall be unlawful for any person to be in an intoxicated condition on or in any street, alley or public place in the city. It shall also be unlawful for any person in an intoxicated condition to disturb the peace of the public, his own or any other family in any private building or place.

31.103 **Profanity** --- It shall be unlawful for any person to use profanity in any street, alley or public place of the city.

31.104 **Indecent conduct** --- It shall be unlawful for any person to commit any indecent or immoral act or to appear in any public place not decently clothed.

(1) **A person who knowingly or intentionally, in a public place**:

(a) Engages in an act of sexual penetration; or

(b) Appears in a state of nudity; or

(c) Fondles the genitals of himself/herself or another person; commits indecent conduct.

(2) **Sexual penetration**: Shall be defined as any contact, however slight, between the sex organ of one person and the sex organ, mouth or anus of another person, or any intrusion, however slight, of any part of the body of one person or any animal or object into the sex organ or anus of another person.

(3) **Nudity**: Shall be defined as the showing or exposure of the human male or female genitals, public area, or buttocks with less than a fully opaque covering, the showing of the female breast with less than a fully opaque covering below a point immediately above the top of the areola, or the showing of covered male genitals in a discernibly turgid state.

(4) **Public place**: Shall be defined as any place where the prohibited conduct may reasonably be expected to be viewed by others.

31.105 **Fighting** --- It shall be unlawful for any person to commit an assault or battery or to fight in any public or private place in the city except in the course of athletic contests held in a gymnasium, or on a stage, or in a rink designed for such purpose.

31.106 **False alarms** --- It shall be unlawful for any person to knowingly start or spread any false alarm of fire in the city.

31.107 **Cheating** --- It shall be unlawful to obtain possession of any goods, property or thing of value by any false pretenses or by cheating or by fraud of any kind.

31.108 **Gambling and prostitution** --- It shall be unlawful to operate, be an employee or inmate in, or attend any gambling resort or house of prostitution, or to make any bet, operate or participate in any lottery, or gambling hazard, or to buy or sell any chances or tickets in any gambling game, arrangement or device in the city.

It shall be unlawful to maintain or patronize any establishment maintained for a gambling house or resort.

It shall be unlawful to possess any gambling device or paraphernalia with the intent to permit the public to use or operate the same; and any such device or paraphernalia kept with such intent may be confiscated by any member of the Police Department.

It shall be unlawful to advertise any gambling house or device in any street, alley or public place within the city.

31.109 Disturbing assemblages --- It shall be unlawful for any person to disturb any lawful assemblage or gathering in the city.

31.110 Hunting --- It shall be unlawful for any person to hunt or engage in killing any animal other than as prescribed by law.

31.111 Concealed weapons --- It shall be unlawful for any person to carry any concealed weapons in the city without having first secured a license to carry such concealed weapons issued under the laws of the state, or as allowed by state law.

31.112 Combustible refuse --- It shall be unlawful to permit or store any combustible refuse in such a manner as to create a fire hazard, or to store or throw any refuse of any kind on any street, alley, or other public place in the city.

31.113 Missiles --- It shall be unlawful to cast, throw or propel any missile on any street, alley or public place; and it shall be unlawful to deposit any glass, nails, tacks or other similar articles on any street, sidewalk or alley in the city

31.114 Advertising --- It shall be unlawful to advertise any unlawful business in the city and it shall be unlawful to injure or deface any lawful advertisement or notice.

31.115 Unlawful assemblages --- It shall be unlawful to collect, gather or be a member of any disorderly crowd, or any crowd gathered for any unlawful purpose.

31.116 (Reserved)

31.117 Discharge of firearms --- It shall a unlawful to discharge any firearms or air-gun in the city, including what is commonly referred to as beebee guns or pellet guns; provided that this Section shall not be construed to prohibit any officer of the law to discharge a firearm in the performance of his duty, nor to any citizen to discharge a firearm when lawfully defending his person or property.

31.118 Shooting bows and arrows and other missiles --- It shall be unlawful to shoot arrows from a bow, or missiles from a slingshot or other device in, across or upon any public street, sidewalk or alley within the city unless the point or tip of said arrow or missile is equipped with a rubber or other soft cushion of a diameter of at least three-fourths of an inch. It shall be unlawful for any parent, guardian or other person who is charged with the supervision of a child or children to permit such child or children to violate the provisions of this Section.

31.119 Pamphlets from plane --- It shall be unlawful to drop leaflets, handbills, or any article whatsoever from any airplane, airship or balloon over the city.

31.120 Phone booths --- Boxes, fixtures or equipment for the installation, maintenance or operation of telephones (hereinafter called and referred to as "telephone call-boxes") in or upon the streets, sidewalks, alleys and public places and ways of the city are a source of disturbance objectionable noise and conduct and annoyance to the persons residing in the neighborhood thereof and to the general public and the same are hereby declared to be a nuisance, except within public parking lots.

No telephone call-box may be installed, erected, operated or maintained in or upon any street, sidewalk, alley or public place or way in or of the city or upon any post, pole standard, building or other structure located or situated in or abutting upon any such street, sidewalk, alley or public place or way in the city, except within public parking lots.

Provided further that no provision of this Article shall be deemed to affect or prohibit the installation, maintenance or operation of telephone call-boxes by the city police department.

31.121 Bathing --- It shall be unlawful for any person to swim or bathe in the waters of the Mississippi River; in Quincy Bay adjacent thereto, or in any other public place in the City of Quincy, or in any public place open to the public view unless such person is adequately garbed in a bathing suit.

31.122 Signs --- It shall be unlawful for any person, firm or corporation to post any bills or advertisements, or place any signs, in or on any public property without the authority of the Council, and it shall be unlawful to post any bill or advertisement, or place any sign on any property without the consent of the a owner thereof. An exception, however, is granted to church directional signs which may be placed on public property without the authority of the Council, provided such signs shall be no larger than 18" x 24" and placed on a regulation sign post and be so placed that they will not block any regular traffic signals or interfere with traffic in any way.

31.123 Medical advertisements --- It shall be unlawful for any person, firm or corporation, by himself, or his or its agents or servants, to distribute, cast, throw, or place, cause to be distributed, cast, thrown or placed, in, upon or along any of the streets, alleys or public places of the city, or upon the porches or yards of private residences therein or within any dwelling or building in the city any samples of merchandise or medicinal preparations for the purpose or with the intent of advertising or making known in a general or promiscuous manner any business, occupation, proposition, medical treatment, medicine, or any other article whatsoever, without consent of the Council.

31.124 Fraudulent use of transfer tickers -- No transfer or written or printed instrument giving or purporting to give the right of transfer to any person from a public conveyance to another public conveyance upon another line or route or from one public conveyance or car to another public conveyance upon the same line shall be issued, sold or given except to a person lawfully entitled thereto.

31.125 Refrigerators --- It shall be unlawful for any person, firm or corporation to abandon or discard, in any place accessible to children, any refrigerator, icebox or chest or box of any kind with a capacity of one and one-half (1-1/2) cubic feet or more which has an attached lid or door which may be fastened shut by means of an attached latch; and it shall be unlawful for the owner, lessee, or manager of any such place to knowingly permit such abandoned or discarded refrigerator, icebox or ice chest to remain in such condition.

31.126 Monuments - destroying --- It shall be unlawful for any person to willfully or heedlessly change, remove, or destroy any stone, stake, or post set or placed to mark the corner of any lot or parcel of ground, street or alley, or to show the grade of any street, alley or sidewalk in the city.

31.127 Ravines - gutters - not to be obstructed --- It shall be unlawful for any person, firm or corporation to obstruct the flow of water in any watercourse or ravine, by damming the same or depositing any earth, stone, rubbish or other material herein so as to make stagnant water therein; or to stop or obstruct the course of water in any street, gutter, public sewer, culvert, or water pipe or drain laid or placed by the city.

31.128 Smoke houses prohibited --- It shall be unlawful to build, erect, maintain or use in any manner any smoke house within the city so that the health, comfort or convenience of any person residing or doing business in the neighborhood thereof may be in any manner affected thereby, and any person so building erecting, maintaining or using such smokehouse in such a manner shall be considered to be guilty of maintaining a nuisance.

31.129 Scaffolds --- Any scaffolds or ladders placed in such a position that they overhang or can fall into my public street alley or other public way in the city shall be firmly and properly constructed and safeguarded; and it shall be unlawful to place or leave any tools or article on any such place in such a manner that the same can fall onto any such street, sidewalk alley or other public way from a greater height than four (4) feet.

31.130 Articles on windows --- It shall be unlawful to place any moveable article on any window ledge, or other place abutting on a public street, alley or other public place at a height above four (4) feet from the ground, in such a manner that the same can be or is in danger of falling onto such street, sidewalk or other public place.

31.131 Whistles --- It shall be unlawful to blow or cause to be sounded any steam whistle of any stationery engine or steam engine in the city except as a signal for starting or stopping work or in emergencies to avoid or prevent injury to persons or property.

31.132 Obstructing stairways or exits --- It shall be unlawful to obstruct or permit the obstruction of any stairway, aisle, corridor or exit in any office building, factory, hotel, school, church, theater, assembly hall, lodge or public hall, or in any building used by two or more tenants or families in such a manner as to interfere or endanger the free use of such stairway, aisle, corridor exit.

31.133 (Reserved)

31.134 Mendicants - vagrants --- It shall be unlawful for any mendicant or vagabond to frequent any depot, store, theater, street, alley, sidewalk, park or any other public place frequented by the public in the city.

31.135 Launching rockets --- It shall be unlawful to launch any rockets within the corporate limits or to conduct any experiments with rockets without first having obtained a permit therefore from the City Council. Rocket fuel shall not be sold to minors.

31.136 Depositing or piling snow or ice --- It shall be unlawful to deposit or pile any snow or ice in any street; or gutter, or for an area no less than three (3) feet in width, perpendicular to the curb line at the location of any parking meter.

31.137 Assistance to police --- No person shall refuse assistance when called upon by any police officer of this city at any time, or to aid him in arresting or taking into custody any person guilty of having committed any unlawful act or to aid such officer in preventing the commission of any unlawful act.

31.138 Trespass ---

(1) **Trespass prohibited**: It shall be unlawful for any person, firm or corporation to commit a trespass within this municipality upon either public or private property.

(2) **Specifically enumerated trespasses - suppression**: Without constituting any limitation upon the provisions of Section 31.138(1) hereof, any of the following acts by any person, firm or corporation shall be deemed included among those that constitute trespasses in violation of the provisions of said Section, and appropriate action may be taken hereunder at any time, or from time to time, to prevent or suppress any violation or violations hereof, the aforesaid enumerated acts so included, being as follows to-wit:

(a) An entry upon the premises, or any part thereof, of another including any public property in violation of a notice posted or exhibited at the main entrance to said premises or at any point of approach or in writing, by any owner or occupant thereof; or

(b) The pursuit of a course of conduct or action incidental to the making of any entry upon the land of another in violation of a notice posted or exhibited at the main entrance to said premises or at any point of approach or entry, or in violation of any notice, warning or protest given orally or in writing by any owner or occupant thereof; or

(c) A failure or refusal to depart from the premises of another in case of being requested, either orally or in writing, to leave by any owner or occupant thereof; or

(d) An entry into or upon any vehicle, aircraft or watercraft made without the consent of the person having the right to the possession or control thereof, or a failure or refusal to leave any such vehicle, aircraft or watercraft after being requested to leave by the person having such right.

31.139 Injury to trees and shrubs --- It shall be unlawful to willfully and maliciously cut down, destroy or otherwise injure any shrub, vine or tree whether standing or growing upon the lands of another or from any public lands or ways anything attached thereto or placed thereon unless such article or thing be his own.

31.140 Vagabondage --- Vagabondage is hereby declared to be unlawful. All persons who are idle and dissolute, or who go about begging; all persons who cheat, defraud or

unlawfully obtain money or other valuable thing from another, pilferers, confidence men, common drunkards, common nightwalkers, persons lewd, wanton or lascivious in speech or behavior, common brawlers, persons who are habitually neglectful of their employment or their calling, and do not lawfully provide for themselves or for the support of their families, and all persons who are idle or dissolute and who neglect all lawful business, and who habitually misspend their time by frequenting houses of ill-fame, gaming houses or taverns; all persons lodging in or found in the nighttime in unoccupied buildings or lodging in the open air and not giving a good account of themselves, and all persons who are known to be thieves, burglars, or pick-pockets, either by their own confession or otherwise, or are habitually found prowling around any crowded thoroughfares, or at public gatherings or assembly, or found in any house of ill-fame or gambling houses, shall be deemed to be and they are declared to be vagabonds.

31.141 <u>House of ill-fame - enticing to enter</u> --- It is unlawful to entice, influence or persuade any person to enter or frequent any bawdy house, house of ill-fame, or of assignation, or place used for the practice of fornication or adultery, or to induce or persuade any minor to enter or frequent, or to allow or permit any minor to remain in any such house or place.

31.142 <u>House of ill-fame - leasing premises for</u> --- It is unlawful to lease, let, or permit any building or premises, boat or floating structure to be used, in whole or in part, as a house of ill-fame, or house of assignation, or place for the practice of fornication or adultery, or to lease any building or premised for a lawful purpose that may afterwards, with lessor's knowledge be converted, in whole or in part, into the immoral uses and purposes above set forth.

31.143 <u>Injury to street lamps, telegraph, telephone and electric light apparatus</u> --- It shall be unlawful to willfully, maliciously or negligently break, deface or injure or destroy any street lamp or lamp post, telegraph, telephone, electric light or other post situated on any public property.

31.144 <u>Malicious mischief to property</u> --- Whoever knowingly damages any property of another without his consent, or opens fire hydrants intentionally and without authorization, or recklessly by means of fire or explosives damages property of another, or knowingly starts a fire on the land of another without his consent, or knowingly deposits on the land or in the building of another, without his consent, any offensive smelling compound and therefore intends to interfere with the use by another of the land or building, shall be guilty of malicious mischief.

31.145 <u>Loitering for the purpose of engaging in drug-related activity</u> ---

(1) **Prohibition**: No person shall loiter in or near any thoroughfare, place open to the public, or near any public or private place in a manner and under circumstances manifesting the purpose to engage in drug-related activity contrary to any of the provisions of Chapter 410 of the Illinois Compiled Statutes of 1989.

(2) **Among the circumstances which may be considered in determining whether such purpose is manifested are**:

(a) Such person is a known unlawful drug user possessor, or seller. For purposes of this Chapter, a "known unlawful drug user, possessor, or seller" is a person who has, within the knowledge of the arresting officer, been convicted in any court within this state of any violation involving the use, possession, or sale of any controlled substance as defined in Chapter 410 of the Illinois Compiled Statutes of 1989, or such person has been convicted of any violation of any of the provisions of said Chapter or substantially similar laws of any political subdivision of this state or of another state; or a person who displays physical characteristics of drug intoxication or usage, such as "needle tracks", burned or callused thumb and index fingers, underweight, nervous and excited behavior.

(b) Such person is currently subject to a court order prohibiting his presence in a high drug activity geographic area.

(c) Such person behaves in such a manner as to raise a reasonable suspicion that he or she is about to engage in or is then engaged in an unlawful drug-related activity, including by way of example only such person acting as a "lookout" or hailing or stopping cars.

(d) Such person is physically identified by the officer as a member of a "gang" or association which has as its purpose illegal drug activity.

(e) Such person transfers small objects or packages in a furtive fashion.

(f) Such person takes flight or manifestly endeavors to conceal himself upon the appearance of a police officer.

(g) Such person manifestly endeavors to conceal any object which reasonable could be involved in an unlawful drug-related activity.

(h) Such person possesses any instrument, article, or thing whose customary or primary purpose is for the sale, administration or use of controlled substances such as, but not limited to, crack pipes, push wires, chore boys, hand scales, hypodermic needles, razor blades, or other cutting tools.

(i) The area involved is by public repute known to be an area of unlawful drug use and trafficking.

(j) The premises involved are known to the defendant to have been reported to law enforcement as a place if drug activity pursuant to Chapter 410 of the Illinois Compiled Statutes of 1989.

(k) Any vehicle involved is registered to a known unlawful drug user, possessor, or seller, or a person for whom there is any outstanding warrant for a crime involving drug-related activity.

(3) If any provision of this Section is held invalid, such invalidity shall not affect any other provision, or the application thereof, which can be given effect without the invalid provision or application, and to this end the provisions of this section are declared to be severable.

31.146 <u>False fire and police alarms</u> --- It. shall be unlawful to report a false alarm of fire or to make a false accident report to the police or to summon the police without any reason to believe that police assistance or protection is in the best interest of the safety or protection of person or property.

31.147 <u>Unlawful parking of motor vehicle</u> - - No person shall willfully park a motor vehicle upon the land of another without the consent of the owner.

31.148 <u>Stealing</u> --- Whoever knowingly obtains or exerts unauthorized control over property of another; or obtains by deception control over property of the owner; or obtains by threat control over property of the owner; or obtains control over stolen property knowing the property to have been stolen by another or under such circumstances as would reasonably induce him to believe the property was stolen, and intends to deprive the owner permanently of the use or benefit of the property; or knowingly uses, conceals or abandons the property in such manner as to deprive the owner permanently of such use or benefit; or uses, conceals, or abandons the property knowing such use, concealment or abandonment probably will deprive the owner permanently of such use or benefit shall be guilty of theft.

31.149 <u>Flight on foot to avoid arrest</u> --- It shall be unlawful for any person to resist or obstruct the performance of a policeman or other peace officer acting in his official capacity by fleeing from a policeman or peace officer on foot to avoid arrest.

31.150 <u>Fortune telling, etc.</u> --- It shall be unlawful for any person to obtain money or property from another by practicing or assuming to practice or holding one's self out as skilled in fortune telling by means of card reading, palmistry, phrenology, clairvoyancy, astrology, seership, spirit mediumship of any crafty science, or by any other device or practice whereby money is obtained from the general public on the pretense of exercise of occult or psychic powers.

31.151 <u>Use of commercial trash pick-up containers</u> --- When the City of Quincy contracts with a private company or enterprise for a trash pick-up in the city, and said company or enterprise places containers throughout the city for use in said pick-up, it shall be unlawful for any person other than a resident of the city to use said containers; it shall be unlawful to deposit garbage in said containers by any person; it shall be unlawful for any person to remove deposited materials from said containers, except persons in charge of said trash pick-up; it shall be unlawful for commercial businesses to use said containers, said use being reserved for individual residences or apartments; and it shall be unlawful to deposit any brush or tree limbs in said containers which exceed the length of six (6) feet.

31.152 <u>Smoking on city busses</u> --- No person shall smoke tobacco or any other substance while riding busses operated by the City of Quincy.

31.153 <u>Fire apparatus</u> ---

(1) **Entering fire houses**: No person shall enter any fire department house or any other place where they equipment and apparatus of the fire department is stored or kept, except on lawful business pertaining to the Fire Department or other authorized city business.

(2) **Fire hydrants**: No person, firm or corporation shall in any manner obstruct the use of any fire hydrant a permit, have or place any material, growth, shrub, tree, vehicle or other object on or within five (5) feet from any fire hydrant. Any such material, growth, shrub, tree, vehicle or other object may be removed by any member of the Fire Department at the risk, cost and expense of the owner or claimant thereof, provided that except in case of emergency, such owner or claimant, if known, shall be given seven (7) days after being notified of such obstruction an opportunity to remove the same.

(3) **Damaging fire apparatus**: No person shall willfully or maliciously cut, break, damage, deface, tamper, destroy or in any manner injure any fire hydrant, engine, hose, equipment or other fire fighting apparatus belonging to the city, or other public or private fire fighting apparatus, or remove any part of any such engine or other apparatus, or in any manner interfere with the authorized use of any fire apparatus.

(4) **Opening fire hydrant**: No person shall open any fire hydrant without authorization from the Fire Chief or other member of the Fire Department.

31.154 <u>Possession of cannabis</u> ---

(1) **Definition**: As used in this Section, "cannabis" includes marijuana, hashish and other substances which are identified as including any parts of the plant Cannabis Sativa, whether growing or not; the seeds thereof, the resin extracted from any part of such plant; and any compound, manufacture, salt, derivative, mixture, or preparation of such plant, its seeds, or resin, including tetrahydrocannabinol (THC) and all other cannabinol derivatives, including its naturally occurring or synthetically produced ingredients, whether produced directly or indirectly by extraction, or indirectly by means of a chemical synthesis or by a combination of extraction and chemical synthesis; but shall not include the mature stalks of such plant, fiber produced from such mature stalks, any other compound, manufacture, salt, derivative, mixture, or preparation of such mature stalks (except the resin extracted therefrom), fiber, oil or cake, or the sterilized seed of such plant which is incapable of germination.

(2) **Violation and penalty**: It is unlawful for any person to knowingly possess any substance containing cannabis. In the event a person possesses more than thirty (30) grams of any substance containing cannabis, a charge may not be brought under this Section but shall be subject to prosecution under the laws of the State of Illinois. This restriction on the applicability of this Section shall in no way limit the unlawfulness of the possession of cannabis in the City of Quincy.

31.155 <u>Truancy prohibited</u> ---

(1) It shall be unlawful for any person under the age of 18 enrolled in a public, private or parochial school within the corporate limits of the City of Quincy to absent himself or herself from attendance at school without parental permission. Any person who shall so absent himself or herself so as to be a chronic truant as defined by Illinois law shall be guilty of the offense of truancy. Emergency or unforeseen absences due to illness or other causes beyond the control of the person so absenting himself or herself from school without parental permission shall not constitute truancy if permission is submitted in writing to the proper school authorities within 24 hours after such absence.

(2) It shall be an offense under this ordinance for a parent or person in loco parentis to knowingly submit to the proper school authorities a written excuse under Section 31.155 that contains false information.

(3) Parental permission shall include permission from a person in loco parentis, and shall be given for reasons only of personal illness, serious family illness, death in the family, serious home emergencies, necessary and lawful family support employment, religious convocation classes, Principal's permission, and compelling family reasons.

(4) No arrest shall be made under this ordinance except on the signed complaint of the Superintendent School Official or said official's designee after a seven day notice is given to a parent or guardian.

(5) Any person violating this ordinance for the first time shall be subject to a fine not to exceed $25.00. Persons violating this ordinance on more than one occasion shall be subject to a fine not to exceed $50.00. Alternative penalties in lieu of fine may be imposed by the court.

31.156 <u>Possession of drug paraphernalia</u> ---

(1) **Definitions**: As used in this Section, "cannabis" shall have the meaning ascribed to it in City of Quincy ordinance 31.154(1), as if that definition were fully set forth herein.

As used in this Section, "controlled substance" shall have the meaning ascribed to it in the "Illinois Controlled Substances Act", 720 ILCS 570/102, as amended or superseded, as if that definition were incorporated herein.

As used in this Section, "drug paraphernalia" means all equipment, products and materials of any kind which are peculiar to and marketed for use in planting, propagating, cultivating, growing, harvesting, manufacturing, compounding, converting, producing, processing, preparing, extracting, testing, analyzing, packaging, repackaging, storing, containing, concealing, injecting, ingesting, inhaling or otherwise introducing into the human body cannabis or a controlled substance in violation of City of Quincy ordinance 31.154 (Possession of cannabis) or the "Illinois Controlled Substances Act", as amended or superseded. It includes, but is not limited to: Kits peculiar to and marketed for use in manufacturing, compounding, converting, producing, processing or preparing cannabis or a controlled substance; isomerization devices peculiar to and marketed for use in increasing the potency of any species of plant which is cannabis or a controlled substance; testing equipment peculiar to and marketed for private home use in identifying or in analyzing the strength, effectiveness or purity of cannabis or non-prescription controlled substances; dilutents and adulterants peculiar to and marketed for cutting cannabis or a non-prescribed controlled substance by private persons; objects peculiar to and marketed for use in ingesting, inhaling, or otherwise introducing cannabis, cocaine, hashish, or hashish oil into the human body including, where applicable, the following items: water pipes; carburetion tubes and devices; smoking and carburetion masks; miniature cocaine spoons and cocaine vials; carburetor pipes; electric pipes; air-driving pipes; chillums; bongs; ice pipes or chillers; any other item the purpose of which is use described in this paragraph of this ordinance.

(2) **Violation and penalty**: It is unlawful for any person to knowingly possess an item of drug paraphernalia with the intent to use it in ingesting, inhaling, or otherwise introducing cannabis or a non-prescribed controlled substance into the human body, or in preparing cannabis or a non-prescribed controlled substance for that use. In determining intent, the trier of fact may take into consideration the proximity of the cannabis or controlled substances to drug paraphernalia. The presence of cannabis or a controlled substance, not lawfully prescribed to the possessor of the item, on said item shall raise a rebuttable presumption that the item is drug paraphernalia, intended to be used for ingesting, inhaling, or otherwise introducing cannabis or a controlled substance into a human body, or in preparing cannabis or a controlled substance for that use.

31.157 - 31.159 (Reserved)

31.160 **<u>Penalty</u>** --- Any person, firm or corporation who violates any of the provisions of this title shall, in addition to such other relief as the law may afford, be punishable as set forth in Chapter 32 of this Code.

ARTICLE II VANDALISM

Section 31.201 <u>Definitions</u> --- Whenever any of the following terms shall be used in this Article they shall have the meanings indicated:

(1) **Person**: Shall include any individual, firm, partnership, association, corporation, company or organization of any kind.

(2) **Property**: Shall include any real estate including improvements thereof, and personally, whether tangible or intangible.

(3) **Parents**: Shall include the lawful father or mother of an unemancipated juvenile, whether by birth or adoption.

(4) **Juvenile**: Shall include a person who has attained ten (10) years of age but who has not yet reached eighteen (18) years of age.

31.202 <u>Offenses</u> --- No person shall commit any of the following acts within the corporate limits of the City of Quincy:

(1) Maliciously, recklessly, or knowingly damage, deface or destroy any property of another person without its consent; or

(2) Maliciously, recklessly, or knowingly by means of fire or explosive device damage, deface or destroy any property of another person; or

(3) Maliciously, recklessly, or knowingly start a fire on the land of another person without his consent; or

(4) Maliciously, recklessly, or knowingly deposit on the land or in a building of another person, without his consent, any stink bomb, or any offensive smelling compound and thereby interfere with the use and occupancy by another of the land or building; or

(5) Maliciously, recklessly, or knowingly and without authority enter into any building, housetrailer, motor vehicle, aircraft or water craft or any part thereof of another person without his consent.

31.203 <u>Liability</u> ---

(1) The parent or parents of an unemancipated juvenile who resides with such parent or parents is liable for actual damages for the willful or malicious acts of such juvenile which cause injury to a person or property, not to exceed $1,000.

Said juvenile shall be deemed to have committed the offense or offenses enumerated in this Article with the knowledge, consent, acquiescence, and permission of the parent or parents in violation of this Article.

(2) The sanctions of this Article shall apply after said parent or parents shall have received a written notice thereof, either by certified or registered mail, return receipt requested or by personal service, with a certificate of personal service returned, from the Police Department of the City of Quincy prior to the hearing on any violation of this Article and institution of any judicial sanction or penalty. Such notice must include the hearing date for any minor arrested for violating this Article, and said parent or parents may present any material evidence at said hearing.

In any action brought pursuant to the provisions of this Article, the parent or parents shall be made a party defendant. Failure to include such parent or parents as a party defendant shall release him or her from any liability for restitution on reparation imposed upon the minor defendant.

31.204 <u>Penalty</u> --- The following penalties shall be imposed upon any person convicted of a violation of this Article:

(1) Such restitution or reparation as the court may require in an amount not to exceed actual loss or damage to property or pecuniary loss. Nothing in this paragraph shall preclude such additional civil remedies available to a complaining party for any sum not recovered.

(2) Any person, firm or corporation who violates any of the provisions of this title shall, in addition to such other relief as the law may afford, be punishable as set forth in Chapter 32 of this Code.

CHAPTER 32

PENALTIES

Section 32.001 **General penalty** --- Except as otherwise provided for in this Code, any person, firm or corporation violating any provision of this Code or amendment thereto, shall be guilty of a petty offense and upon conviction thereof, shall be fined an amount not less than twenty-five dollars ($25.00) and not more than five hundred dollars ($500.00).

32.002 **Special penalties** ---

(1) **Generally**: Notwithstanding anything herein to the contrary, special penalties are established for certain violations of the provisions of this Code as provided in this Section. In the event maximum penalties exceed those which may be imposed by the City of Quincy as a home rule unit of local government pursuant to the provisions of Section 6, Article VII (Local Government) of the Constitution of the State of Illinois, or otherwise by law, such maximum penalties shall be deemed to be reduced to the allowable maximum.

(2) **Notice of violation**:

(a) **Minimum penalties**: The minimum penalty for any violation of this Code for which a notice of violation is used pursuant to Section 32.003, shall be that penalty prescribed for the violation if paid to the City Treasurer as provided therein. Such minimum penalty shall not be deemed to include, however, the additional sum due under Section 32.003(1) if the penalty is not timely paid.

(b) **Animal Running at Large**: The City of Quincy has determined that animals running at large are a nuisance to the public health, safety and welfare. Accordingly, in the event a person, firm or corporation violates Section 22.111 or Section 22.112 of this Code, the minimum penalty for such offense shall be increased from the amount set forth in Section 32.003 by the sum of $25 for each and every offense beyond the first offense committed within the twenty-four (24) month period preceding the date of an offense. Thus, for example, if within the preceding twenty-four (24) month period from the date of an offense the person, firm or corporation has committed such offense one (1) other time, the minimum penalty would be $100.00; or if two (2) other times the minimum penalty would be $125.00. For purposes of this paragraph, the dates of any offense are to be considered, rather than any other date such as the date of a finding of guilty. Additionally, only those offenses or violations are to be considered for which the person, firm or corporation has paid the penalty in response to a notice of violation or has been found guilty or entered a plea of guilty to such offense (even if thereafter place on supervision). This Section shall not be construed to allow the presentation of evidence of earlier offenses at any hearing relative to any such offense until the alleged offender has been found guilty or entered a plea of guilty to the offense involved. In addition to such other proof as the court shall deem competent, a certificate of the Circuit Clerk, a certificate of the City Treasurer or a certificate of the Chief of Police or a records keeper of the City of Quincy Police Department shall be prima facie evidence of prior violations.

(c) **Cross connection control**: In the event a person, firm or corporation is alleged to have violated the provisions of Section 25.505(1), (2) or (3) or Section 25.509(1) of this Code, pertaining to cross connection control surveys and inspections, the minimum penalty for such offense shall be increased from the amount set forth in Section 32.003 as provided in this paragraph The penalty shall be increased by the sum of $25.00 for each and every violation subsequent to the first violation occurring within the twelve (12) month period from the date of the first violation in the manner described in paragraph 32.002(2)(b) above.

(d) **Early collection of garbage and trash**: In the event a person, firm or corporation has violated the provisions of Section 21.320 of this code, pertaining to the early time limit for the collection by a commercial collector of garbage, trash, grease or debris, the minimum penalty for such offense shall be increased from the amount set forth in Section 32.003 by the sum of $100.00 for each and every violation subsequent to the first violation occurring within the twelve (12) month period from the date of the first violation in the manner described in paragraph 32.002 (2) (b) above.

(3) **Peace disturbance**: The minimum penalty for peace disturbance as set forth in Section 31.101 of this Code shall be one hundred dollars ($100.00) if the conduct on which the offense is based occurred in whole or in part in a public place. For purposes hereof, a public place shall include but not be limited to any place, premises or area to which the public as opposed to certain private individuals have a right to resort or access; a place, premises or area visited by many persons rather than simply a few; a place, premises or area exposed to the public; or a place, premises or area where the public gathers together or passes to and fro.

(4) **Possession of cannabis**: The penalties for the possession of cannabis as set forth in Section 31.154 of this Code shall be as follows:

(a) **Less than 2.5 grams**: Possessing less than 2.5 grams of any substance containing cannabis shall be fined not less than one hundred dollars ($100.00) and not more than five hundred dollars ($500.00);

(b) **2.5 - 10 grams**: Possession of 2.5 grams or more, but not more than 10 grams of any substance containing cannabis shall be fined not less than two hundred dollars ($200.00) and not more than seven hundred and fifty dollars ($750.00);

(c) **More than 10 grams**: Possessing more than 10 grams but not more than 30 grams of any substance containing cannabis shall be fined not less than three hundred dollars ($300.00) and not more than one thousand dollars ($1,000.00).

(5) **Demolition of designated property**: Any unauthorized demolition of a landmark of any property within a designated Historic District shall be punishable by a fine not less than five hundred dollars ($500.00) nor more than five thousand dollars ($5,000.00). In the case of an unauthorized demolition, the city may refuse to issue a building permit for the subject property for a period not to exceed three years after the date of a violation.

(6) **Liquor - minors**: The penalties drinking, purchasing or possessing alcoholic liquor, or misrepresenting ones age for the purpose of purchasing or obtaining alcoholic liquor by any person under the age of 21 years of age, as set forth in Section 18.036 of this Code, shall be as follows:

(a) **First offense**: First time violators of said Code provisions shall be fined not less than one hundred dollars ($100.00) and not more than three hundred dollars ($300.00); and/or education and public service at the discretion of the court.

(b) **Subsequent offenses**: Those who violate said Code provisions for the second and subsequent time shall be fined not less than three hundred dollars ($300.00) and not more than five hundred dollars ($500.00); and, at the discretion of the court, may be ordered to attend an alcohol education program and perform reasonable public service work.

(c) **Night club related:** In the event the violator acquired the alcoholic liquor in a night club, then was in possession of said alcoholic liquor in a night club or was under the influence of said alcoholic liquor in a night club, irrespective where the actual arrest

took place, the violator shall be fined not more than one thousand dollars ($1,000.00) and not less than five hundred dollars ($500.00) and, at the discretion of the court, may be ordered to attend an alcohol education program.

(7) **Transportation of liquor**: The minimum penalty for violating Section 18.016 of this Code shall be one hundred fifty dollars ($150.00).

(8) **Furnishing liquor to minors**: The penalties for selling, giving or delivering alcoholic liquor to any persons under 21 years of age or permitting any persons under 21 years of age to consume alcoholic liquor, as set forth in Section 18.036 of this Code shall be as follows:

(a) First time violators of said Code provision shall be fined not less than three hundred dollars ($300.00) and not more than five hundred dollars ($500.00).

(b) Those who violate said Code provisions for the second or subsequent time shall be fined not less than five hundred dollars ($500.00) and not more than one thousand dollars ($1,000.00).

(c) In the event the violator of Section 18.036 was 21 years of age or older and the offense occurred in a licensed night club or cabaret, the violator shall be fined not less than one thousand dollars ($1,000.00) and not more than two thousand five hundred dollars ($2,500.00).

(d) Any violator of Section 18.008(4) and its subparts shall be fined not less than one hundred dollars ($100.00) and not more than five hundred dollars ($500.00); provided, however, that any violator of 18.008(c) shall be fined not less than two hundred fifty dollars ($250.00) and not more than one thousand dollars ($1,000.00).

(9) **Stop work order issued**: Any person, firm or corporation who shall continue any work in or about a structure after having been served with a stop work order, except such work as that person is directed to perform to remove a violation or unsafe condition, shall be liable for a fine of not less than one hundred dollars ($100.00) and not more than five hundred dollars ($500 00).

(10) **Keg permit stickers**: Any person, firm or corporation who violates the provisions of Section 18.040 of this Code shall be fined as follows:

(a) Not less than two hundred fifty dollars ($250.00) for any violation thereof other than violation of subsection (4) (sale prohibited).

(b) Not less than five hundred dollars ($500.00) and not more than one thousand dollars ($1,000.00) for any violation of subsection (4) (sale prohibited).

(11) **Loitering - drug related activities**: The penalties for violation of the prohibition against loitering for the purpose of engaging in drug related activities, as provided in Section 31.145 of this Code shall be as follows:

(a) First time violators of said Code provision shall be fined not less than one hundred dollars ($100.00) and not more than five hundred dollars ($500.00).

(b) Those who violate said Code provisions for the second or subsequent time shall be fined not less than five hundred dollars ($500.00) and not more than one thousand dollars ($1,000.00)

(12) **Violation of demolition of buildings or structures and requirement of a fire protection guard ordinance**: An person, firm or corporation who or which violates any provisions of Article IV of Chapter 23 of the Municipal Code or Section 21.101(6) of Chapter 21, shall, in addition to such other relief as the law may afford, be punishable as and for a fine not less than five hundred dollars ($500.00) for each and every day of any violation contrary to this ordinance. In addition to these penalties, or such other relief as

the law may afford, the City of Quincy may institute an appropriate action or proceedings to recover any and all expenses or costs, including attorney fees enforcing this ordinance. All such amounts shall be a lien on the property at the proposed demolition site.

(13) **Tobacco vendor prohibitions and requirements (sale to minors prohibited**: The minimum penalty for violating Section 30.202 of this Code shall be $100.00.

(14) **Tobacco - possession/purchase by minors prohibited**: The penalties for possession or purchasing tobacco products by minors as provided in Sections 30.203 and 30.204 of this Code shall be as follows:

(a) **First offense**: First time violators of said Code provisions may, at the discretion of the court, be ordered to complete a program of education regarding the dangers of tobacco use, or fined not less than the sum of $25.00 for violation of Section 30.203 (purchase) or $10.00 for violation of Section 30.204 (possession). It shall be the policy of the city to recommend, absent aggravating circumstances, that such first time violators receive a sentence of supervision subject to completion of an appropriate program of education as directed by the court.

(b) **Subsequent offenses**: Those who violate Sections 30.203 (purchase) for the second and subsequent time shall be fined not less than $50.00, nor more than $100.00. Those who violate Section 30.204 (possession) for the second and subsequent time shall be fined not less than $25.00 nor more than $50.00

(15) **Possession of drug paraphernalia**: The penalties for the possession of drug paraphernalia as set forth in Section 31.156 of this Code shall be as follows:

(a) **First offense**: First time violators of said Code provisions shall be fined not less than three hundred fifty dollars ($350.00) and not more than five hundred dollars ($500.00); and may be ordered to attend a substance abuse education program at the discretion of the court. All drug paraphernalia is forfeited to the City of Quincy. When property is forfeited under this Act, the chief administrative officer of the seizing department or agency may retain it for official use, or destroy it as provided by State of Federal law.

(b) **Subsequent offenses**: Those who violate said Code provisions for the second and subsequent time shall be fined not less than five hundred dollars ($500.00) nor more than one thousand dollars ($1,000.00) and, at the discretion of the court, may be ordered to attend a substance abuse education program. All drug paraphernalia is forfeited to the City of Quincy. When property is forfeited under this Act, the chief administrative officer of the seizing department or agency may retain it for official use, or destroy it as provided by State of Federal law.

32.003 <u>Notice of violation</u> ---

(1) **Generally**: Notwithstanding anything herein to the contrary, any person, firm or corporation alleged to have violated those provisions of the Code hereinafter designated, shall be promptly issued a notice of violation alleging such offense. Such notice of violation shall be in a form prescribed by the chief of Police or other enforcing officer designated under this Code, in consultation with the Corporation Counsel and the City Attorney consistent with applicable law and court rules. Such notice of violation shall set forth the violation alleged and the penalty which may be paid to the City Treasurer. The penalty shall be in accordance with the schedule hereinafter provided, provided that the penalty prescribed shall be increased for violations of Section 22.206 of this Code

(pertaining to dogs running at large) and Section 25.505 and 25.509 of this Code (pertaining to cross connection controls) as provided in Section 32.002(2)(b) and (c). The person, firm or corporation shall be provided fourteen (l4) days from the date of such notice of violation to pay the prescribed penalty. If not paid within such fourteen (14) days period, such person, firm or corporation shall be allowed an additional fourteen (14) days to pay the prescribed penalty plus a sum equal to the court costs would be assessable by the Circuit court upon the disposition of such violation. The additional sum shall not be deemed to be or constitute the collection of court costs, but is merely the manner in which such additional sum is determined. Collection of this additional sum shall be waived by the Chief of Police, or his or her designate, or other enforcing officer designated under this Code, upon receiving satisfactory proof or evidence that the person, firm or corporation did not receive actual notice of the issuance of the notice of violation during the initial period at which time payment could have been made without payment of such additional sum. Prior to the time designated for payment herein, the Water Superintendent, or his or her designate, shall further have the authority to waive collection of the prescribed penalty for alleged violations of Section 25.505 and 25.509 (pertaining to cross connection controls) upon receipt of satisfactory proof that the person, firm or corporation has complied or is in compliance with the requirements of said Section. In the event that payment is made in accordance herewith, such payment shall be in full satisfaction of any penalty for such violation. Nothing herein shall prevent or preclude enforcement as provided or allowed by this Code for separate, independent, prior or subsequent violations. In the event that such payment is not made within the time periods prescribed, that is, within twenty-eight (28) days, a complaint, notice to appear or other appropriate document shall be filed by the Chief of Police or officer of the Quincy Police Department, or other appropriate person or other enforcing officer designated under this Code or by an information initiated by the City Attorney, before a court of proper jurisdiction charging such violation.

(2) **Designated violations**: The notice of violation or citation procedure shall apply to the following specified violations of this Code:

VIOLATION DESCRIPTION/TITLE	SECTION NUMBER	PENALTY
Violation of snow removal article	14.701	$ 20.00
Violation of street cleaning article	14.801	$ 10.00
Unattended vehicles	20.323	$ 20.00
Dropping debris on street	20.328	$ 20.00
Clear vision	20.401	$ 5.00
Turn signals	20.402	$ 5.00
Unnecessary noises	20.403	$ 5.00
Horn	20.404	$ 5.00
Gas & smoke	20.405	$ 5.00
Projecting load (width & height)	20.406	$ 5.00
Muffler	20.408	$ 5.00
Lights	20.409	$ 5.00
Non-skid devices	20.410	$ 5.00
Tires	20.411	$ 5.00
No stopping or standing areas	20.501	$ 5.00

Intersection	20.501 (1)	$	5.00
Crosswalk	20.501 (2)	$	5.00
Where usable width of roadway reduced less than 18 feet	20.501 (3)	$	5.00
Within 20 feet of driveway to fire department	20.501 (4)	$	5.00
Upon bridge or viaduct	20.501 (5)	$	10.00
Within 20 feet of intersection (30 feet of 30th & Maine) (40 feet of 18th & Elm)	20.501 (6)	$	5.00
Within 50 feet of railroad	20.501 (7)	$	5.00
On sidewalk or parkway	20.501 (8)	$	5.00
Any place where official sign prohibits	20.501 (9)	$	5.00
Within 4 feet of side of railroad tracks	20.501 (10)	$	5.00
Yellow no parking zone	20.501 (11)	$	5.00
No parking zone (30th, Chestnut to Maine)	20.501 (12)	$	5.00
Within 5' each side of intersection of public alley	20.501 (13)	$	3.00
College Ave. 17th to 18th (11:30 a.m. to 1:00 p.m.)	20.501 (14)	$	5.00
Truck parking limit	20.502	$	5.00
Two-hour posted zones	20.503	$	5.00
Parking in public parkways	20.504	$	5.00
Parking on sidewalks	20.505	$	10.00
Fire lanes	20.506	$	7.00
Angle parking zones	20.507	$	5.00
School no parking zones	20.508	$	5.00
Parking at curb (parallel parking and wrong side of street)	20.509	$	5.00
Painted parking lines	20.510	$	5.00
Parking vehicle for sale	20.511	$	10.00
No parking zones (general)	20.512	$	5.00
in public alley	20.512 (1)	$	5.00
in front of public building	20.512 (2)	$	5.00
in front of hospital or hotel	20.512 (3)	$	5.00
theaters	20.512 (4)	$	5.00
30 feet of stop signal/sign	20.512 (6)	$	5.00
20 feet of crosswalk	20.512 (7)	$	5.00
within 7-1/2 feet of fire hydrant	20.512 (8)	$	10.00
blocking drive	20.512 (9)	$	5.00
yellow zones prohibited by this article	20.512 (10)	$	5.00
in alley bounded by 3rd to 12th, and York to Broadway	20.512 (11)	$	5.00
Where signs posted by police or fire chief	20.512 (12)	$	5.00
in any driveway, parkway or sidewalk	20.512 (14)	$	5.00
Taxicab parking	20.513	$	5.00
Bus/cab stands	20.514	$	5.00
Stopping for passenger or merchandise	20.515	$	5.00
Alley	20.516	$	5.00
Signs	20.517	$	5.00
Aircraft parking. Quincy Municipal Airport	20.518	$	5.00

Parking in handicapped spaces	20.521	$ 100.00
Parking outside marked spaces	20.605	$ 5.00
Manner of parking	20.606	$ 5.00
Overtime Parking	20.607	$ 5.00
Removal of enforcement marks	20.608	$ 5.00
Parking in rented or leased spaces	20.610	$ 10.00
Bicycle violations under section 20.703 and 20.704 by Class II offenders	20.705 (d)	$ 5.00
Household rubbish and garbage collection	21.316 (b)	$ 15.00
The penalty for violating provisions of Section 21.316(b) shall be increased to the sum of $25.00 for the second offense occurring within a 12 month period preceding the offense for which the latest notice is issued.		
Proper receptacle required	21.303	$ 15.00
Deposit in street	21.313	$ 15.00
Removal of garbage or refuse (not produced by residence)	21.314	$ 15.00
Violation of hauling curfew	21.320	$ 100.00
Cruelty to animals	22.102	$ 100.00
Dangerous animals	22.104	$ 100.00
Noises	22.106	$ 75.00
Diseased animals	22.107	$ 75.00
Animals housing	22.108	$ 75.00
Rabies control violation	22.110	$ 75.00
Animals Running at Large	22.111	$ 75.00
Running at Large; Nuisances	22.112	$ 100.00
Keeping of dogs	22.201	$ 75.00
Muzzling of dogs	22.202	$ 100.00
Dangerous dog – confinement	22.203	$ 100.00
The penalty for violating the dangerous dog confinement provisions shall be increased by the sum of $50.00 for each subsequent offense occurring within a period of twelve months preceding the offense for which the latest notice is issued		
Female dog in heat	22.205	$ 75.00
Noises	22.207	$ 25.00
Fighting animals (and hosting)	22.208	$ 10000
Removal of waste material	22.210	$ 25.00
Keeping of cats	22.301	$ 75.00
Female cat in heat	22.302	$ 75.00
Inoculation against rabies	22.304	$ 75.00
Strays	22.401	$ 75.00
Breeding of livestock	22.402	$ 75.00
Horses	22.403	$ 75.00
Fowl	22.404	$ 75.00

Rabbits	22.405	$ 75.00
Enticement of animals	22.505	$ 75.00
Survey and investigations	25.505 (1)	$ 25.00
Survey and investigations	25.505 (2)	$ 25.00
Survey and investigations	25.505 (3)	$ 25.00
Inspection and maintenance	25.509 (1)	$ 25.00
Parking on land of another	31.147	$ 20.00

32.004 <u>Separate violations</u> --- Any person, firm or corporation violating any provision of this Code shall be guilty of a separate offense for each and every day during any portion of which any violation of any provision of this Code is committed, continued or permitted by any such person, firm or corporation.

32.005 <u>Supervision</u> ---

(1) **Generally**: In addition or as an alternative to imposing a penalty as provided for herein, a court of competent jurisdiction may place a person, firm or corporation violating any provision of this Code on supervision. When a person, firm or corporation is placed on supervision, the court shall enter an order for supervision specifying the period of such supervision and shall defer further proceedings in the case until the conclusion of that period.

(2) **Period of supervision**: The period of supervision shall be reasonable under all of the circumstances of the case, but may not be longer than one (1) year.

(3) **Conditions**: The court may, in addition to other considerations, require that the person, firm or corporation placed on supervision:

(a) Make a report to and appear it person before the court or participate with such court's social service agency as directed by the court in the order of supervision;

(b) Pay a monetary penalty and/or court costs;

(c) Work or pursue a course of study or vocational training;

(d) Undergo medical or psychiatric treatment or treatment for drug addiction or alcoholism;

(e) Attend or reside in a facility established for the instruction or residence of those on probation

(f) Support his or her dependents;;

(g) Refrain from possessing a firearm or other dangerous weapons;

(h) And, in addition, if a minor:

l.) Reside with his or her parents or legal guardian or in a foster home;

2.) Attend school or other training program;

3.) Attend a non-residential program for youth;

4.) Contribute to his or her own support at home or in a foster home; and,

(i) Make restitution or reparation in an amount not to exceed actual loss or damage to property and pecuniary loss, determining additionally the amount and conditions of payment;

(j) Perform some reasonable public service work such as, but not limited to, the picking up of litter in public parks or along public streets and alleys, or the maintenance of public facilities.

(4) **Deferral of judgment**: The court shall defer entering any judgment on the charges until the conclusion of the supervision.

(5) **Compliance with supervision**: At the conclusion of the period of supervision, if the court determines that the person, firm or corporation has successfully complied with all of the conditions of supervision, the court shall discharge the person, firm or corporation and enter a judgment dismissing the violation charged.

(6) **Effect of supervision**: Discharge and dismissal upon a successful conclusion of a disposition of supervision shall be deemed without adjudication of guilt and shall not be termed a conviction for purposes of disqualification or disability imposed by law on conviction of a violation hereunder. Three (3) years after discharge and dismissal under this Section, a person, firm or corporation may, on request to the Chief of Police or his designee, have his, her or its record of alleged violation expunged.

(7) **Immunity**: Neither the City of Quincy nor any official or employee thereof acting in the course of his or her official duties shall be liable for any tortious acts of any person placed on supervision who is given any public service work as a condition of supervision, except for willful misconduct or gross negligence on the part of the city, the official or the employee.

(8) **Non-employee**: No person assigned to a public service employment program shall be considered an employee for any purpose of the City of Quincy, the county or other party.

(9) **Incarceration**: Nothing herein shall be deemed to allow the violation of any provision of this Code to be punishable by incarceration or imprisonment.

32.006 <u>Restitution</u> --- In addition to imposing a penalty as provided for herein, a court of competent jurisdiction may additionally require that the person, firm or corporation violating a provision hereof make restitution to any person, firm or corporation who or which incurs property damage as a result of such violation. Any court finding a person, firm or corporation in violation of a provision hereof shall, at the request of the City Attorney and after proof of property damage is made, require the making of restitution to the city in any case in which property damage has been incurred by the city.

32.007 <u>Alternative sections</u> --- In all cases where the same offense is made punishable or is created by different clauses or to sections of this Article, the prosecuting officer may elect under which to proceed; but not more than one recovery shall be had against the same person for the same offense; provided that the revocation of a license or permit shall not be considered a recovery or penalty so as to bar any other penalty being enforced.

32.008 <u>Other remedies</u> --- Nothing herein shall be construed to affect any just, equitable or legal right or remedy which may otherwise be available to the City of Quincy or any other person, firm or corporation as a result of the violation of this Code.

32.009 <u>Crime Laboratory - analysis fee</u> --- When a person has been adjudged guilty of an offense in violation of Section 31.154 or 31.156 or placed on court supervision for same, in addition to any other disposition, penalty or fine imposed, a criminal laboratory analysis fee of fifty dollars for which he was convicted, found guilty, and/or placed on court supervision shall be levied by the court. Upon verified petition of the person, the court may suspend payment of all or part of the fee if it finds the person does not have the ability to pay the fee. Said fee shall be paid to the crime laboratory doing said analysis and shall be placed in a dedicated fund by that agency to support laboratory or anti-drug

activity. Said fee shall, in no event, be payable to the general fund of any unit of government.

CHAPTER 33

THE CODE

ARTICLE I	**TITLE - INTERPRETATION**
ARTICLE II	**AMENDMENTS**
ARTICLE III	**PRINTING**
ARTICLE IV	**REPEALING CLAUSE**

ARTICLE I TITLE - INTERPRETATION

Section 33.101 Title --- This article, and any amendment thereto, shall be known as the "Municipal Code of Quincy"; or "Municipal Code of Quincy of 1980"; the "Quincy Municipal Code"; or words of similar effect demonstrating reference hereto. Any reference to the number of any section contained herein shall be understood to refer to the position of the same under its appropriate chapter heading, its article heading (if any) and of the penalty clause relating thereto, as well as to the section itself, when reference is made herein by title in an legal document or ordinance of the city.

33.102 Definitions --- The following words and phrases whenever used in the ordinances of the City of Quincy, Illinois shall be construed as defined in this Section unless a different meaning is specifically defined and more particularly directed to the use of such words or phrases:

(1) **City**: Means the City of Quincy, Illinois or the area within the territorial limits of the city and such territory outside of the city over which the city has jurisdiction or control by virtue of any constitutional or statutory provision.

(2) **Computation of time**: Means the time within which an act is to be done. It shall be computed by excluding the first day and including the last day; if the last day is Sunday or a legal holiday, that day shall be excluded.

(3) **Council**: Means the City council of the City of Quincy, Illinois. All its members of all councilmen means the total number of councilmen provided by the general laws of the State of Illinois.

(4) **County**: Means the County of Adams, State of Illinois.

(5) **Law**: Denotes applicable federal law, the constitution and statutes of the State of Illinois, the ordinances of the city, and, when appropriate, any and all rules and regulations which may be promulgated thereunder.

(6) **May**: Is permissive.

(7) **Month**: Means a calendar month.

(8) **Must and shall**: Are mandatory.

(9) **Oath**: Shall be construed to include an affirmation or declaration in all cases in which, by law, an affixation may be substituted for an oath and in such cases the words swear and sworn shall be equivalent to the words affirm and affirmed.

(10) **Ordinance**: Means a law of the city, provided that a temporary or special law, administrative action, order or directive may be in the form of a resolution.

(11) **Owner**: Applied to a building or land includes any part owner, joint owner, tenant in common, joint tenant or tenant by the entirety of the whole or a part of such building or land.

(12) **Person**: Means natural person, joint venture, joint stock company, partnership, association, club, company, corporation, business, trust, organization, or the manager, lessee, agent, servant, officer or employee of any of them.

(13) **Personal property**: Includes money goods, chattels, things in action and evidences of debt.

(14) **Preceding and following**: Mean next before and next after, respectively.

(15) **Property**: Includes real and personal property.

(16) **Real property**: Includes lands, tenements and hereditaments.

(17) **Sidewalk**: Means that portion of a street between the curbline and the adjacent property line intended for the use of pedestrians.

(18) **State**: Means the State of Illinois

(19) **Street**: Includes all streets, highways, avenues, lanes, alleys, courts, places, squares, curbs, or other public ways in this city which have been or may hereafter be dedicated and open to public use, or such other public property so designated in any law of this state.

(20) **Tenant and occupant**: Applied to a building or land include any person who occupies whole or a part of such building or land, whether alone or with others.

(21) **Title of office**: Use of the title of any officer, employee, department, board or commission means that officer, employee, department, board or commission of the city.

(22) **Wholesale, wholesaler or wholesale dealer**: Shall be understood to relate to the sale of goods, merchandise, articles or things in quantity to persons who purchase for the purpose of resale, as distinguished from a retail dealer who sells in smaller quantities direct to the consumer.

(23) **Written**: Includes printed, typewritten, mimeographed or multigraphed.

(24) **Year**: Means a calendar year.

(25) All words and phrases shall be construed and understood according to the common and approved usage of the language, but technical words and phrases and such others as may have acquired a peculiar and appropriate meaning in the law shall be construed and understood according to such peculiar and appropriate meaning.

(26) When an act is required by an ordinance, the same being such that it may be done as well be an agent as by the principal, such requirement shall be construed as to include all such acts performed by an authorized agent.

33.103 <u>Grammatical interpretation</u> --- The following grammatical rules shall apply in the ordinances of the city:

(1) **Gender**: Designation in the form of any gender includes the masculine, feminine and neuter genders.

(2) **Singular and plural**: The singular number includes the plural and the plural includes the singular.

(3) **Tenses**: Words used in the present tense include the past and the future tenses and vice versa, unless manifestly inapplicable.

(4) **Use of words and phrases**: Words and phrases not specifically defined shall be construed according to the context and the approved usage of the language.

33.104 <u>Construction</u> --- The provisions of the ordinances of the city and all proceedings under them are to be construed with a view to effect their objects and to promote justice.

33.105 <u>Prohibited acts include causing and permitting</u> --- Whenever in the ordinances of the city any act or omission is made unlawful, it shall include causing, allowing, permitting, aiding, abetting, suffering, or concealing the fact of such act or omission.

33.106 <u>Repeal shall not revive any ordinances</u> --- The repeal of an ordinance shall not repeal the repealing clause of such ordinances or revive any ordinance which has been repealed thereby.

33.107 <u>Severability</u> --- The sections, clauses, sentences and parts hereof are severable, are not matters of mutual essential inducement, and any of them may be excised by any court of competent jurisdiction if this code would otherwise be unconstitutional or ineffective. If any one or more sections, clauses, sentences and parts hereof shall for any reason be questioned in any court of competent jurisdiction and shall be adjudged unconstitutional or invalid, such judgment shall not affect, impair or invalidate the remaining provisions; thereof, but shall be confined in its operation to the specific provision or provisions so held unconstitutional or invalid, and the inapplicability or invalidity of any section, clause, sentence or part hereof in any one or more instances shall not be taken to affect or prejudice its applicability or validity in any other instance.

33.108 <u>Officers and employees</u> --- Whenever reference is made in this Article to a city officer or employee by title only, this shall be construed as though followed by the words "of the city of Quincy" and shall be taken to mean the officer or employee or one of his assistants of this city having the title mentioned or performing the duties indicated. No provision of this Article designating the duties of any officer or employee shall be so construed as to make such officer or employee liable for any fine or penalty provided in this Article for a failure to perform such duty, unless the intention of the City Council to impose such a fine or penalty on such officer or employee is specifically and clearly expressed in the section creating the duty.

ARTICLE II AMENDMENTS

Section 33.201 **Reference to code** --- Any additions or amendments to this Code, when passed in such form as to indicate the intention of the City Council to make the same a part of this Article shall be deemed to be incorporated in this Article so that a reference to the Municipal Code of Quincy shall be understood to include them.

33.202 **Penalties** --- In case of amendment of any section of this Article containing the provisions for which a penalty is provided in another section, the penalty so provided in such other section shall be held to relate to the section so amended or the amending section, whether re-enacted in the amendatory ordinary or not, unless such penalty is specifically repealed therein.

33.203 **Recording amendments** --- It shall be the duty of the City Clerk to keep at least one copy of the Municipal Code of Quincy which he shall mark in the following manner:

Whenever an ordinance amends or makes an addition to the Code is passed and approved, he shall note on the margin of the section or sections amended that such amendment has been made with a reference to the place in the amendment book hereinafter described, where the amendment may be found; in the case of an addition, he shall mark in the appropriate place a notation that such addition has been made, with a similar reference to the aforesaid amendment book. The City Clerk shall keep a separate book containing every amendment or addition passed to this Code, with a reference on each copy of such amendment or addition as to the place in the record book of ordinances where the original ordinance may be found. The above mentioned records shall be kept in addition to the record of ordinances which the Clerk is required to keep by statute.

ARTICLE III PRINTING

Section 33.301 **Authorization** --- This Article shall be printed and published in book form.

33.302 **Distribution of copies** --- All of the printed copies of this Code belonging to the city shall be deposited with the City Clerk. He shall deliver one copy thereof to such persons as the Council may direct, and such copies shall remain the property of the City of Quincy, to be used by such person, or official, only so long as such person or official shall continue to serve in the capacity requiring the use of the City Code.

33.303 **Presentation of copies** --- The City Council shall have the power to extend to or reciprocate courtesies of other municipalities by presenting them with a copy of this Code bound at the expense of the city, as to them shall seem suitable, and they shall also have the power to present two copies of this Code to the Illinois Municipal League, and to such other organizations or persons as they shall direct.

33.304 **Sale price** --- The sale price of all other copies of this Code on a compact disc shall be $35.00, a printed copy without a binder shall be $55.00, and a printed copy with a binder shall be $100.00.

33.305 **Numbering** --- Copies shall be serially numbered and the Clerk shall keep a current record showing the name of the owner or person to whom each copy is assigned.

33.306 **Amendments** --- The sale price for all amendments and supplements thereto shall be at the rate of twenty-five ($.25) cents per page.

ARTICLE IV REPEALING CLAUSE

Section 33.401 **Repeal of general ordinances** --- All general ordinances of the city passed by the Council prior to the effective date of this Code are hereby repealed and specifically the Municipal Code of Quincy of 1958, except such as are expressly excepted from repeal herein, and except such as are referred to herein as being still in force or are by necessary implication herein reserved from repeal (subject to the savings clauses contained in the following Section), from which are excluded the following ordinances which are not hereby repealed: tax levy ordinances; appropriation ordinances; ordinances relating to boundaries; franchise and other ordinances granting special rights to persons or corporations; contract ordinances and ordinances authorizing the execution of a contract or the issuance of warrants; salary ordinances; ordinances establishing, naming or vacating streets, alleys or other public places; improvement ordinances; bond ordinances; ordinances relating to elections; ordinances relating to the transfer or acceptance of real estate by or from the city; ordinances relating to the Quincy Housing Authority; and municipal sales tax ordinances; ordinances authorizing the Water Commission to introduce fluoride into the city water system; ordinances relating to civilian defense; and all special ordinances.

33.402 **Public utility ordinances** --- No ordinance relating to railroads or railroad crossings with streets and other public ways or relating to the conduct, duties, service or rates of public utilities shall be repealed by virtue of the passage of this Article or by virtue of the preceding sections, excepting as this Code may contain provisions for such matters, in which case this Article shall be considered as amending such ordinance or ordinances in the respect of such provisions only.

33.403 **Pending suits** --- No new ordinance shall be construed or held to repeal a former ordinance, whether such former ordinance is expressly repealed or not, as to any offense committed against the former ordinance or as to any act done, any penalty, forfeiture or punishment so incurred or any right accrued, or claim arising under the former ordinance, or in any way whatsoever to affect any such offense or act so committed or so done, or any penalty, forfeiture or punishment so incurred, or any right accrued or claim arising before the new ordinance takes effect, save only that proceedings thereafter shall conform as far as practicable to the ordinance in force at the time of the proceeding. If any penalty, forfeiture or punishment be mitigated by any provision of a new law or ordinance, such provision may, by consent of the party affected, be applied to any judgment pronounced after the new ordinances take effect. This Section shall extend to all repeals either by express words or by implication, whether the repeal is in the ordinance making any new provisions upon the same subject or any other ordinance. Nothing contained in this or the preceding Section shall be construed as abating any action new pending under or by virtue of any general ordinance of the city, herein repealed; or as discontinuing, abating, modifying or altering any penalty accrued or to accrue, or as affecting the liability of any person, firm or corporation, or as waiving any right of the city under any section or provision of ordinances existing at the time of the passage of this Article.

33.304 **<u>Time of taking effect</u>** --- This ordinance, or Code, shall take effect and be in force and effect from and after its passage, approval and publication as provided by law.

ADOPTED: February 25, 1980

KENNETH J. KIRCHER

APPROVED: February 26, 1980

C. DAVID NUESSEN
MAYOR

Officially published in book from this 28th day of February , 1980 .

CHAPTER 34

GAMES OF CHANCE - RAFFLE

Section 34.001 <u>Definitions</u> ---- For the purpose of this ordinance, the following definitions apply:

"**Net proceeds**" means the gross receipts from the conduct of raffles, less reasonable sums expended for prizes, local license fees and other reasonable operating expenses incurred as a result of operating a raffle.

"**Raffle**" means a form of lottery, as defined in Section 28-2(b) of the "Criminal Code of 1961", conducted by an organization licensed under this act, in which:

(1) The player pays or agrees to pay something of value for a chance, represented and differentiated by a number or by a combination of numbers or by some other medium, one or more of which chances is to be designated the winning chance;

(2) The winning chance is to be determined through a drawing or by some other method based on an element of chance by an act or set of acts on the part of persons conducting or connected with the lottery, except that the winning chance shall not be determined by the outcome of a publicly exhibited sporting contest.

"**Non-profit**" means an organization or institution organized and conducted on a not-for-profit basis with no personal profit inuring to any one as a result of the operation.

"**Charitable**" means an organization or institution organized and operated to benefit an indefinite number of the public. The service rendered to those eligible for benefits must also confer some benefit on the public.

"**Educational**" means an organization or institution organized and operated to provide systematic instruction in useful branches of learning which compare favorably in their scope and intensity with the course of study presented in tax-supported schools.

"**Religious**" means any church, congregation, society or organization founded for the purpose of religious worship.

"**Fraternal**" means an organization of persons having a common interest, the primary interest of which is to both promote the welfare of its members and to provide assistance to the general public in such a way as to lessen the burdens of government: by caring for those that otherwise would be cared for by the government.

"**Veterans**" means an organization or association comprised of members of which substantially all are individuals who are veterans or spouses, widows, or widowers of veterans, the primary purpose of which is to promote the welfare of its members and to provide assistance to the general public in such a way as to confer public benefit.

"**Labor**" means an organization composed of workers organized with the objective of betterment of the conditions of those agreed in such pursuit and the development of a higher degree of efficiency in their respective occupations.

34.002 <u>Licensing</u> ---

(1) **Location**: Licenses shall only be granted for the sale of raffle chances in locations set forth in the application and which are within the borders of the City of Quincy. The license fee shall be $5.00.

(2) **Authorized applicant**: Licenses shall be issued only to bona fide religious, charitable, labor, business, fraternal, educational or veteran's organizations that operate without profit to their members and which have been in existence continuously for a period of five (5) years immediately before making application for a license and which have had during that entire 5-year period a bona fide membership engaged in carrying out their objects or to non-profit fund raising organization that the licensing authority determines is organized for the purpose of providing financial assistance to an identified individual or

group of individuals suffering extreme financial hardship as the result of an illness, disability, accident or disaster.

(3) **Duration**: Licenses shall permit the applicant to issue or sell raffle chances only for those dates set forth in the application but in no event to exceed 60 days during which chances may be issued or sold.

34.003 <u>Requirements</u> ---

(1) No person, firm or corporation shall conduct raffles or chances without having first obtained a license therefore from the office of the City Clerk.

(2) The application for license shall contain the following:

(a) The name of the applicant;

(b) The area or areas within the licensing authority in which raffle chances will be sold or issued:

(c) The time period during which raffle chances will be sold or issued;

(d) The time of determination of winning chances;

(e) The location or locations at which winning chances will be determined;

(f) A sworn statement signed by the presiding officer and the secretary of the organization attesting to the fact that the applicant is of a type or character which makes it eligible for a license under this ordinance and not ineligible for any of the reasons or causes hereinafter set forth;

(g) Maximum dollar amount of raffle tickets to be sold;

(h) Such other information as the City Clerk shall reasonably require to process said application.

(3) The exact form of application shall be established by the City Clerk consistent with this ordinance.

(4) Each license is valid for one raffle only.

(5) Each application shall be accompanied by a bond of the raffle manager. All operation of and the conduct of raffles shall be under the supervision of a single raffles manager designated by the application. At the time the application is submitted to the City Clerk, the manager shall give a fidelity bond in the amount of the maximum dollar amount of all raffle chances to be sold (as stated on the application) in favor of the applicant conditioned upon his honesty in the performance of his duties. Terms of the bond shall provide that notice shall be given in writing to the licensing authority not less than thirty (30) days prior to its cancellation. The governing body of a local unit of government may waive this bond requirement by including a waiver provision in the license issued to an organization under this act, provided that a license containing such waiver provision shall be granted only by unanimous vote of the Board of Directors of the licensed organization. All bonds must be approved by the City Clerk or a deputy of her office.

(6) The City of Quincy shall act on all applications within thirty (30) days after they are submitted to the City Clerk's office in proper form with all required bond, information and other documentation included therein, and upon recommendation of the City Clerk, and shall grant or deny said license,

3.004 <u>Ineligible persons and organizations</u> --- The following are ineligible for any license under this ordinance:

(1) Any person who has been convicted of a felony;

(2) Any person who is or has been a professional gambler or gambling promoter;

(3) Any person who is not of good character;

(4) Any firm or corporation in which a person defined in (1), (2), or (3) has a proprietary, equitable or credit interest, in which such a person is active or employed;

(5) Any organization in which a person defined in (1), (2), or (3) is an officer, director, or employee, whether compensated or not;

(6) Any organization in which a person refined in (1), (2), or (3) is to participate in the management or operation of a raffle as defined in this ordinance.

34.005 <u>Conduct of raffles</u> --- The conducting of raffles subject to the following restrictions:

(1) The entire net proceeds of any raffle must be exclusively devoted to the lawful purposes of the organization permitted to conduct the game.

(2) No person except a bona fide member of the sponsoring organization may participate in the management or operation of the raffle.

(3) No person may receive any remuneration or profit for participating in the management or operation of the raffle.

(4) A licensee may rent a premises on which to determine the winning chance or chances in a raffle only from an organization which is also licensed under this ordinance.

(5) Raffle chances may be sold or issued only within the area specified on the license and winning chances may be determined only at those locations specified on the license.

(6) No person under the age of 18 year may be a raffle manager or administrator of a raffle.

34.006 <u>Required records and reports</u> ---

(1) Each organization licensed to conduct raffles and chances shall keep records of its gross receipts, expenses and net proceeds for each single gathering or occasion at which winning chances are determined. All deductions from gross receipts for each single gathering or occasion shall be documented with receipts or other records indicating the amount, a description of the purchased item or service or other reason for the deduction, and the recipient. The distribution of net proceeds shall be itemized as to payee, purpose, amount and date of payment.

(2) Gross receipts from the operation of raffles programs shall be segregated from other revenues of the organization, including bingo gross receipts. If bingo games are also conducted by the same non-profit organization pursuant to license therefore issued by the Department of Revenue of the State of Illinois and placed in a separate account. Each organization shall have separate records for its raffles. The person who accounts for gross receipts, expenses and net proceeds from the operation of raffles shall not be the same person accounts for other revenues of the organization.

(3) Each organization licensed to conduct raffles shall report monthly to its membership, and to the Quincy City Clerk, its gross receipts, expenses and net proceeds from raffles, and the distribution of net proceeds itemized as required in this Section.

(4) Records required by this Section shall be preserved for 3 years, and organizations shall make available their records relating to operation of raffles for public inspection at reasonable times and places.

34.007 <u>Other activities prohibited</u> --- Nothing in this ordinance shall be construed to authorize the conducting or operating of any gambling scheme, enterprise, activity or device other than raffles as provided for herein.

34.008 <u>Penalty</u> --- Any person, organization, society, partnership, association or corporation who violates any provisions of this Chapter 34 or shall fail to comply with any of the requirements thereof shall be fined for a first violation of any of the provisions of this Chapter 34 in accordance with the general provisions of Chapter 32.

INDEX

All References Are To Sections

ABANDONED OR DERELICT VEHICLES: general provisions, 20.1001 - 20.1008

ACCIDENTS: traffic, 20.101

ACCUMULATION OF DEBRIS: 21.101

ADVERTISING: medical, 31.123; posting bills, 31.122; unlawful, 31.114

AERONAUTICS COMMISSION: 7.105

ALCOHOLIC LIQUOR DEALERS: general provisions, 18.001-18.040; 18.100-18.111

- bar attendance, 18.036
- cabarets, 18.008, 18.009
- classification of license, 18.006
- consumption/unlicensed premise, 18.100
- definitions, 18.001
- election days, 18.028
- exemptions, 18.012, 18.111
- fees, disposition, 18.018
- imitations, 18.017
- keg permit & stickers, 18.040
- license, posting, 18.032
- license, renewal, 18.021
- license requirement, 18.002,18.003,18.026
- license/revocation & suspension, 18.035
- license year, 18.010
- minors, sale to, 18.036, 18.008(4)
- night clubs, 18.008, 18.009
- peddling, 18.023
- premises used for dwelling, 18.013
- Quincy Park District, 18.039(3)
- sale with meals, 18.011
- transportation, 18.016
- boats, use by operators, 13.611
- change of location, 18.022
- closing hours, 18.027
- consumption & possession, 18.039
- drivers using, 20.802
- employees, 18.025
- fee, 18.007, 18.103
- identification, 18.036
- intoxication, 31.102
- license/description premises 18.030
- license, record, 18.019
- license, required, 18.005
- license restrictions, 18.004
- license transfer, 18.020
- location requirement, 18.026
- music, dancing, 18.029
- original package, 18.015
- penalty, 18.040
- public buildings/sale in, 18.014
- sale to intoxicated person, 18.033
- sanitary conditions, 18.024
- view from street/lighting, 18.031

ALLEYS: traffic, 20.326, 20.516, 20.348

AMBULANCES: general provisions, 20.901 - 20.903

AMPLIFIERS, 30.701

AMUSEMENT DEVICES: see coin operated devices, 16.901

AMUSEMENT PARKS: 16.102

AMUSEMENTS: general provisions, 16.101 - 16.111
athletic exhibitions, 16.103
bowling alleys, 16.301 - 16.303
circuses, 16.401 - 16.409, 16.102
coin operated devices, 16.901 - 16.907
inanimate objects, exhibition, 16.102
medicine shows, 16.104
merry-go-rounds, 16.102
order maintained, 16.105
penny arcades, 16.102
riots, 16.107
side shows, 16.404
street parades, circuses, etc. 16.102, 16.403
wild west shows, 16.102
billiard halls, 16.201 - 16.204
carnivals, 16.102
exit lights, 16.110
inspections, 16.106
licenses, 16.102
menageries, 16.102
motion pictures, 16.501 - 16.510
parks, 16.102
public dances, 16.601 - 16.610
shooting galleries, 16.701 - 16.706
skating rinks, 16.801 - 16.806
smoking on premises, 16.108, 16.109

ANIMALS: general provisions, 22.101 - 22.110
abandonment, 22.103
cats, 22.301 - 22.304
dangerous or vicious animals, 22.101, 22.104, 22.105, 22.203
definitions, 22.101
dog bites, 22.204
enticement, 22.505
housing, 22.109
killing dangerous animals, 22.105
noises, 22.106, 22.207
rabies control, 22.110, 22.304
running at large: cats, 22.303;dogs, 22.206
traffic, 22.107
breeding, 22.402
cruelty to, 22.102
diseased animals, 22.107
dogs, 22.201 - 22.210
fowl, 22.404
horses, 22.403
muzzles, 22.202
rabbits, 22.405
search & seizure, 22.109
strays, 22.401
unattended, 20.324

ANNEXATION ORDINANCES, 33.401

ANTI-POLLUTION & INDUSTRIAL BONDS: general provisions, 13.1401 - 13.1413

APPEALS: housing standards, 23.502
Zoning Board, 11.705

APPOINTMENT
Bd. of Fire & Police Commission, 11.601
City Engineer, 7.108
Development & Redevelopment, 11.1301
Director Administrative Services, 10.101
Director Human Resources, 10.501
Director Planning & Development, 10.401
Building Inspector, 10.404
Comptroller, 5.002
Deputy Chief, 8.003
Director of Purchasing, 10.201
Library Board, 11.201
Officers & employees, 7.108

Police, 9.005
Quincy Preservation Commission, 11.1401
Special police, 9.010
Traffic Commission, 11.801
Police Pension Board, 11.301
Sister City Commission, 11.1901
Supt. Street & Bridge, 7.108
Zoning Board of Appeals, 11.701

ARREST: general provisions, 13.115
City Forester, 10.302
Police Department, 9.004
Fire Department, 8.010

ASSEMBLAGES
disturbing, 31.109
unlawful, 31.115

ATHLETIC EXHIBITIONS: 16.103

AUCTIONS AND AUCTIONEERS: general provisions, 19.101 - 19.108
auction house, 19.103
exemptions, 19.107
investigations, 19.105
penalty, 19.108
employees, 19.106
fees, 19.102
license, 19.101

AUDITORIUMS
public buildings, 30.501
public gatherings, 30.601

AUTO COURTS: general provisions, 19.201 - 19.210
building requirements, 19.203
license, 19.201, 19.205
regulations, 19.207 - 19.209
trailers, 19.209
fire walls, 19.204
lights, 19.208
sanitary requirements, 19.206

AUXILIARY POLICE: 9.014

BARGES: docks and harbors, 13.501

BARRICADES
excavations, 14.308
street construction, 14.109, 14.110

BATHING: public, 31.121

BENCH MARKS: 13.903

BEVERAGES: food, 21.401

BICYCLES: general provisions, 20.701 - 20.705

BIDS: general provisions, 13.1601 - 13.1625

BILLIARD HALLS: general provisions, 16.201 - 16.204
fee, 16.202
hours of operation, 16.203
licenses, 16.201
penalty, 16.204

BILLS
advertising, 21.123
distributing, 19.1102
posting, 31.122

BOARD OF FIRE & POLICE COMMISSIONERS: general provisions, 11.601 - 11.626

BOARD OF LOCAL IMPROVEMENTS: 11.101

BOARD OF ZONING APPEALS: 11.701

BOATS: general provisions, 13.601 - 13.615

BONDS: Anti Pollution and Industrial, 13.1401

BOND
Aeronautics Commission, 7.105
circus, 16.408
City Forester, 10.303
City Clerk, 3.002
City Treasurer, 4.013
construction of pavement, 14.103
Director of Administrative Services, 10.102
Mayor, 1.008
Officers, 13.113
Plumbers, 25.401
register, 4.008
Sanitation Committee, 7.105
Surety, 1.008, 13.906

BOUNDARY ORDINANCES: 33.401

BONFIRES: 21.503

BOND ORDINANCES: 33.401

BOWLING ALLEYS: general provisions, 16.301 - 16.303
fees, 16.302
license, 16.301
penalty, 16.303

BOWS AND ARROWS: 31.118

BUILDING COMMISSION: general provisions, 11.1801 - 11.1806

BUILDING INSPECTOR
billboard regulations, enforce, 29.1404
duties, 10.404, 14.504
building regulations, enforce, 23.101
entry, 13.1201
flammable liquids, 27.002
hoisting materials, 14.122
investigations, 15.005
public gathering premises, 30.602, 30.606
subdivision regulations, 13.718

BUILDING LINES: 13.708

BUILDINGS
Auto Courts, 19.203
Building Commission, 11.1801, 23.502
construction regulations, 23.101-23.106
fire limits, 23.101
fire protection guard, 23.302
flammable liquids, housing, 27.003-27.038
International Building Code, 23.101, 23.501, 23.801
maintenance, general requirements, 23.501
minimum standards, 23.501-23.504
moving buildings, 23.201
owners/occupants, responsibility, 23.501
plumbing, 24.101
public, 30.501
registered architect & structural engineer, 23.101
requirements for business license, 15.808
septic tanks, 24.201, 24.204, 24.816
skating rink premises, 16.804
violations, 23.106
building operations, 23.401-23.405
demolition permit, 23.301
electricity, 26.001
examination by fire chief, 8.012
flood hazard areas, 23.103
hoisting materials, 14.122
inspector, 10.404
material obstruct streets, 23.401
motion picture premises, 16.508
National Plumbing Code, 24.108
permits, fees, 23.101(6)
plans, 23.101
Plumbing Inspector, 24.101
public dance premises, 16.605
regulations, enforcement, 23.106
repairs, 8.012
safeguards, 23.404
sidewalks, 23.403
smoke houses, 31.128
water installation, 25.101

BUSINESS DISTRICT DEVELOPMENT AND REDEVELOPMENT COMMISSION:
general provisions, 11.1301 - 11.1306
duties, 11.1304
membership, 11.1302
bonds, 11.1303
finance, 11.1305

BUS ZONES: 20.514

BUSSES, NO SMOKING: 31.152

CABARETS: alcoholic dealers, 18.008

CARNIVALS: 16.102

CEMETERIES: general provisions, 13.801 - 13.806

CHEATING: 31.107

CHURCH
public buildings, 30.501
buildings, 23.101
public gatherings, 30.601

CIRCUSES: general provisions, 16.401 - 16.409
bond, 16.408
concessions, 16.404
inspection, 16.406
penalty, 16.409
cheating, 16.407
fee, 16.403, 16.102
license, 16.401, 16.102
sideshows, 16.404

CITY ATTORNEY
general provision, 6.007
prosecute violations, 25.308
Assistant City Attorney, 6.008

CITY CLERK: general provisions, 3.001 - 3.013
accounts 3.005
bids, opening, 13.1611
Council meetings, records, 2.112
documents, 3.008
license expiration notices, 15.007
license signature, 15.004
money, 3.004
register of taxicab license, 19.907
signatures, 3.003
amendments, recording, 33.203
bonds, 3.002
deputy, 3.010
indexes, 3.009
license forms, 15.003
minutes, 2.112
records, 3.006, 2.112
seal of city, 3.007
Town Clerk, 3.013

CITY COUNCIL: 2.101

CITY ENGINEER: 7.108

CITY FORESTER: general provisions, 10.301 - 10.305

CITY MARKET: general provisions, 13.401 - 13.402

CITY TREASURER: general provisions, 4.001 - 4.012
accounts, 4.005, 4.007
city collector, 4.010
duties, 4.002
funds, deposit, 4.003
reports, 4.006, 4.007
warrants, register, 4.009
bonds, 4.008
deputy 4.012
election, 4.001
records, 4.004
town collector, 4.011

CITY TREE BOARD: general provisions, 11.1201 - 11.1205

CIVIL DEFENSE: see Director of Administrative Services, 10.101

CLAIMS: against the City, 5.006, 5.007

CODE: general provisions, 33.101 - 33.108
amendments, 33.201 - 33.203
pending suits, 33.403
repealing clause, 33.401
enacting clause, 33.404
printing, 33.301 - 33.306

COIN OPERATED AMUSEMENT DEVICES: general provisions, 16.901 - 16.907
devices, view, 16.904
inspection, 16.905
license, 16.902, 16.903
license revocation, 16.906
penalty, 16.907

COLLECTOR
city, 4.010
town, 4.011

COMBUSTIBLE REFUSE: 31.112

COMMISSION OF EQUAL OPPORTUNITIES: 11.901

COMMUNITY DEVELOPMENT: 10.406

COMPTROLLER: general provisions, 5.001 - 5.018
accounts, 5.011
annual settlement, 5.015
annual budget, 5.014
appointment, 5.002
appropriations, 5.009, 5.010
assistants, 5.003
claims against city, 5.006 - 5.007
comptroller's clerk, 5.003
contracts, 5.014
deputy, 5.018
duties, 5.004
ex-officio comptroller, 5.017
licenses, signature, 5.016
monthly statement, 5.012, 5.013
records, 5.005
warrants, records, 5.008

CONCEALED WEAPONS: 31.111

CONCESSIONS: 16.401

CONDUCT
police, 9.007
public dances, 16.606
shooting galleries, 16.703
skating rinks, 16.805

CONFLICT OF INTEREST: Purchasing, 13.1624

CONSERVATORS OF PEACE: 13.115

CONSTRUCTION: subsidewalk space, 14.606

CONTAINERS
flammable liquids, 27.006, 27.007
liquified petroleum gases, 28.004
trash, 31.151

CORPORATE SEAL: 13.901

CORPORATION COUNSEL: general provisions, 6.001 - 6.010
Assistant Corporation Counsel, 6.006
suits and actions, 6.002
Traffic Commission, representation on, 11.801

COUNCIL, CITY: general provisions, 2.101 - 2.113
bids, letting, 13.110, 13.111
Director Administrative Services, 10.103
non-attendance, 2.108
Plan Commission, 11.501, 11.503
records, 2.112
rules of order, 2.201 - 2.206
Traffic Commission, representation, 11.801
library directors, report, 11.206
meetings, 2.102. 2.103
ordinances, 2.105, 2.106, 2.207
quorum, 2.107
records, officers, 13.108
Street & Bridge Committee, 13.402

CURFEW: general provisions, 30.401 - 30.405

DANCES: public dances, 16.601

DANCING: alcoholic liquor dealer's premises, 18.029

DANGEROUS TREES: 14.405

DATUM AND BENCH MARK: 13.903

DAYLIGHT SAVINGS TIME: 13.907

DEVELOPMENT AND REDEVELOPMENT COMMISSION: 11.1301

DIKES: flammable liquids, 27.029 - 27.032

DIRECTOR OF ADMINISTRATIVE SERVICES: general provisions, 10.101 - 10.105
appointment, 10.101
contracts, 10.104
bond, 10.102
duties, 10.103, 10.105

DIRECTOR OF PLANNING & DEVELOPMENT: general provisions, 10.401 - 10.406
appointment, 10.401
Director Community Development, 10.406
authority, duties, 10.403, 10.402
inspection & enforcement, 10.404

DIRECTOR OF PURCHASING: general provisions, 10.201 - 10.202

DISEASE
animals, 22.107
swimming pools, 24.309
trees, 21.101

DISORDERLY CONDUCT: 31.101

DOCKS AND HARBORS: general provisions, 13.501 - 13.506
barges, 13.503, 13.504
duties, 13.502, 13.503
harbor master, 13.502, 13.503
loading flammable liquids, 27.037, 27.038
storage, 13.505
boats, 13.503, 13.506
good, removal, 13.505
public landing, 13.501 - 13.504
rafts, 13.503, 13.504
sunken boats, removal, 13.506

DRAINS: obstruction, 14.116

DRIVEWAYS: general provisions, 14.201 - 14.207
curbing, 14.205
materials, 14.204
repair, 14.206
grade surface, 14.203
permit, 14.201

DROPPING PAMPHLETS FROM PLANE: 31.119

DRUGS
boats, 13.611
possession drug paraphernalia, 31.156
drivers, using, 20.802

DYNAMITE: 30.107

EASEMENTS: new subdivisions, 13.705, 13.711

ELECTION ORDINANCES: 33.401

ELECTION PRECINCTS: 2.401

ELECTRICAL COMMISSION: general provisions, 11.1701 - 11.1706

ELECTRICAL CONTRACTORS & ELECTRICIANS:
general provisions, 19.401 - 19.410
fee, 19.404(5)
registration, 19.402
definition, 19.401
penalty, 19.410
regulations, 19.405

ELECTRICAL INSPECTOR
certificate of approval, 26.005
condemnation of wiring/apparatus, 26.002
inspections, 26.004, 26.006

ELECTRICITY: general provisions, 26.001 - 26.010
certificate of approval, 26.005
condemnation of wiring/apparatus, 26.002
inspections, 26.004
loading docks for flammable liquid, 27.038
wiring in pumphouses, 27.034
circuit fuses, 26.002
Electrical Commission, 11.1701
penalty, 26.010
rules adopted, 26.002

EMINENT DOMAIN: 12.101

EQUAL OPPORTUNITIES COMMISSION: general provisions, 11.901 - 11.905

EXCAVATIONS: general provisions, 14.301 - 14.313
barricades, lights, 14.308
bond, 14.307
injury to trees, 14.408
manner of excavating, 14.309
no parking signs, 14.308
openings, 14.303, 14.305, 14.306
penalty, 14.313
permits, 14.301 - 14.304
resurfacing, 14.305, 14.311
sidewalks, blocking, 14.310
supervision, 14.312
surface restoring, 14.311

EXITS
lights, amusement premises, 16.110
lights, public buildings, 30.507
motion picture theaters, 16.509
obstructing, 31.132
public gatherings, 30.603

EXPECTORATING: 21.412

EXPLOSIVES: general provisions, 30.105 - 30.109

FAIR HOUSING: general provisions, 30.1001 - 30.1009

FALSE ALARMS: 31.106, 31.146

FENCES
accessory uses, 29.705
barbed wire, 14.121

FIGHTING: 31.105

FIRE ALARM WIRES: cutting, 23.206

FIRE & POLICE COMMISSION, BOARD OF: general provisions, 11.601 - 11.626
duties, 11.605
firemen, appointment, 8.004
police officers, appointment, 9.002, 9.005

FIRE APPARATUS: 31.153

FIREARMS: discharge of, 31.117

FIRE DEPARTMENT: general provisions, 8.001 - 8.012
appointment, 8.004
arrests, 8.010
chief, 8.001 - 8.003, 8.009 - 8.012
chief/inspect circuses, 16.406
chief/abate dangerous buildings, 23.304
creation, 8.001
chief/notice removal of debris, 21.102
deputy chief, 8.003
discharge, 8.004
duties, 8.006, 16.106
Electrical Commission, chief, 11.1702
false alarms, 31.106, 31.146
examination dangerous buildings, 8.012
following apparatus, 20.327

flammable liquid, regulations enforcement, 27.002
public building regulations, chief to enforce, 30.502
public gathering premises, inspection 30.602, 30.606
Traffic Commission, 11.801
traffic, direction scene of fire, 20.103
members, appointment, 8.004
pension board, 11.401, 11.402
repairs, buildings, 8.012
rules and regulations, 8.011
sign erection/chief inspect, 14.506
sign erection/chief supervise, 14.504
training, 8.005

FIRE EXTINGUISHERS: boats, 13.607

FIRE LIMITS: 23.101

FIREMEN'S PENSION BOARD: general provisions, 11.401 - 11.402

FIRE PREVENTION BUREAU: general provisions, 21.201 - 21.220

FIRE PROTECTION
private protection classes, 25.205
protection guard, 23.301-23.306

FIRES
bonfires, 21.503
open burning, 21.501 - 21.507
false alarms, 31.106

FIREWORKS: general provisions, 30.101 - 30.104

FISCAL YEAR: 13.902

FLAMMABLE LIQUIDS: general provisions, 27.001 - 27.056
building, 27.008, 27.033, 27.035
containers, 27.006, 27.007
emergency valves in pipes, 27.028
fire prevention regulations, 27.011, 27.012
loading docks, 27.037, 27.038
N.F.B.O. bulletins, 28.004, 28.008, 28.009
permits, 27.051
piping, 27.021 - 27.027
premises, 27.046 - 27.049
storage, 27.004 - 27.007, 27.010, 27.034
storage in subsidewalk space/vaults, 14.605
trucks, 27.050
warehouses, 27.035
classifications, 27.003
dikes, 27.029, 27.032
fire protection, 27.048
garage, construction of, 27.036
loading operations, 27.045
penalty, 27.056
pipe lines, 27.051 - 27.053
pouring into sewers, 27.009
pumphouses, 27.034
service stations, 27.055, 27.056
tanks, 27.013-27.020, 27.050
unloading operations, 27.040-27.044

FLIGHT ON FOOT: 31.149

FLOOD HAZARD AREAS: general provisions, 23.601 - 23.612, 23.101

FLY ASH: 21.413

FOOD: sanitary regulations, 21.402
serving, 21.410

FOREIGN FIRE INSURANCE BOARD: general provisions, 11.2501 - 11.2502

FOREIGN FIRE INSURANCE COMPANIES: general provisions, 19.501 - 19.504

FORTUNETELLING: 31.150

FRANCHISE ORDINANCES: 33.401

FUNERAL PROCESSIONS: 20.338 - 20.340

GAMBLING AND PROSTITUTION: 31.108

GAMES: playing on streets, 14.119

GARBAGE: general provisions, 21.301 - 21.323
- combustible refuse, 31.112
- deposit in street, 21.304
- definitions, 21.302
- special containers, 21.304, 21.305
- deposits, 21.405
- dropping on street, 20.328
- removal, 21.304

GAS PIPES: leaks, preventing, 14.407

GIFT BAN ACT: general provisions, 13.1501 - 13.1505

GUNPOWDER: 30.108

GUTTERS: obstructing, 31.127

HANDBILLS: general provisions, 19.1101 - 19.1104
- dropping from airplanes, 31.119
- house to house distribution, 19.1102
- license, 19.1103

HANDICAPPED PARKING: 20.519

HEALTH
- cemeteries, 21.406
- diseased animals, 22.107
- expectorating, 21.412
- food serving, 21.410
- nuisance, abatement, 21.101
- premises, condition, 21.407
- sanitary regulations, 21.402
- unwholesome food, 21.401
- dense smoke and odor, 21.413
- drinking cups, 21.409
- fly ash, 21.413
- garbage, 21.301
- pools, stagnant, 21.404
- refuse, deposit, 21.405
- unlawful acts, 21.408
- watercourses, 21.403

HEALTH OFFICER, investigations, 15.005

HOME RULE UNIT ENABLING PROVISIONS: general provisions, 12.101 - 12.102
eminent domain, 12.201 - 12.234

HOTEL OPERATORS TAX: general provisions, 17.201 - 17.220

HOTELS: public buildings, 30.501

HOUSE NUMBERING: general provisions, 13.301 - 13.304

HOUSE OF ILL-FAME
enticing to enter, 31.141
leasing premises for, 31.142

HOUSING UNRELATED ADULT: general provisions, 19.1501 - 19.1508

HUMAN RESOURCES DIRECTOR: general provisions, 10.501 - 10.502
appointment, 10.501
duties, 10.502
Ethics Officer, 13.1502
risk management, 10.502(b)

HUNTING: 31.110

ICE: depositing or piling, 31.136

IMPASSE RESOLUTION: general provisions, 13.1301 - 13.1309

INDECENT CONDUCT: 31.104

INDUSTRIAL & ANTI-POLLUTION BONDS: general provisions, 13.1401 - 13.1415

INJURY TO PAVEMENTS: 14.113

INTOXICATION: 31.102

JUKE BOXES: see coin operated amusement devices, 16.901

JUNK SHOPS, JUNKYARDS: general provisions, 19.1201 - 19.1211
definitions, 19.1201
penalty, 19.1211
licenses, 19.1203, 19.1204, 19.1206, 19.1207
physical requirements, 19.1202
records, 19.1205

LANDMARKS AND HISTORIC DISTRICTS: general provisions, 29.1001

LIBRARY BOARD: general provisions, 11.201 - 11.207
appointment, 11.202
board of directors, 11.202
meeting, 11.205
regulations, 11.207
reports, 11.206
terms of office, 11.203
unlawful retention library materials, 11.208
vacancies, 11.204

LICENSES AND PERMITS: general provisions, 15.001 - 15.015
alcoholic liquor dealers, 18.002, 18.022
amusement, 16.102
amusement parks, 16.102
applications, 15.001
athletic exhibitions, 16.103
auctions/auctioneers, 19.101
auto courts, 19.201
billboard permits, 29.1404
billiard halls, 16.201
bowling alleys, 16.301
building permits, 23.101(6)
building requirements, 15.008
circuses, 16.102, 16.403
demolition permits, 23.301
coin operated amusement devices, 16.902
driveways, 14.201
electrical permits, 26.003
fees, 15.006
fireworks exhibition, 30.101
flammable liquids, 27.051-27.053
foreign fire insurance companies, 19.501
handbills, 19.1103
inanimate objects, exhibition of, 16.102
inspections, 15.011
investigations, 15.005
medicine show, 16.104
menageries, 16.102
merry-go-rounds, 16.501
moving building permits, 23.201
open burning, 21.504
overhanging signs, 14.503
peddlers, 19.601
penny arcades, 16.102
plumbing permits, 24.101
public dances, 16.601
second hand stores, 19.701
sewer permits, 24.101
shooting galleries, 16.701
sideshows, 16.403
skating rinks, 16.801
solicitors, 19.801
sound amplifiers permit, 30.701
street parades, circus, etc. 16.102, 16.403
sidewalk space, 14.601
tag day, 30.301
taxicabs, 19.918
trailer coach parks, 19.1002
wild west shows, 16.102

LIQUIFIED PETROLEUM GASES: general provisions, 28.001 - 28.010
containers, 28.004
equipment, 28.005
inspection, 28.002
odorizing, 28.003
penalty, 28.010
production, 28.006
storage, 28.007, 28.008

LITTER CONTROL: nuisance abatement, 21.101

LIVE ENTERTAINENT: 16.601

LOCAL IMPROVEMENTS, BOARD OF - general provisions, 11.101 - 11.103
driveway curbing, approve, 14.205
duties, 11.101, 11.103
meetings, 11.102

LOCALLY IMPOSED AND ADMINISTERED TAX RIGHTS AND RESPONSIBILITIES – general provisions, 17.601 – 17.618

LOITERING, 31.145

MAYOR: general provisions, 1.001 - 1.008
- appointments: see officers; boards and commissions
- licenses record, alcoholic liquor, 18.019
- pro-tem, 1.006
- arrests, 13.115
- Board Local Improvements, 11.101
- presiding officer, 2.104
- records, officers, 13.108

MEDICAL ADVERTISEMENTS: 31.123

MEDICINE SHOWS: 16.104

MEETINGS
- address, 2.204
- disturbing council, 2.113
- Plan Commission, 11.502
- Zoning Board of Appeals, 11.703
- council, 2.102, 2.103
- Library Board, 11.205
- Traffic Commission, 11.803

MISCHIEF/MALICIOUS: 31.144

MISSILES: 31.113, 31.118

MITTIMUS: Comptroller, 13.1511

MOBILE HOME PARKS: general provisions, 19.1001 - 19.1028
- application, proceedings, 19.1004
- certificate of use occupancy, 19.1027
- license, 19.1002
- minimum distance, 19.1010
- patio, 19.1014
- plan, 19.1003
- sewers, 19.1017
- stand, 19.1008
- streets and sidewalks, 19.1015
- width, 19.1009
- definitions, 19.001
- garbage, 19.1020
- lighting, 19.1021
- obstruction, 19.1025
- penalty, 19.1028
- service buildings, 19.1018
- size, 19.005 - 19.1007
- storage, 19.1014
- water supply, 19.1016
- yards, 19.1011 - 19.1013

MONUMENTS: destroying, 31.126

MOTION PICTURES: general provisions, 16.501 - 16.510
- attendance, 16.506
- exits, 16.509
- license, 16.501
- premises, 16.508
- scenery, 16.507
- building requirements, 16.508
- fees, 16.503
- penalty, 16.510
- prohibited pictures, 16.505
- unlicensed premises, 16.504

MOTORCYCLES: 20.331, 20.334

MOVING BUILDINGS: general provisions, 23.201 - 23.209
bond, 23.203
fee, 23.202
penalty, 23.209
warnings, 23.206
expenses, 23.204
lights, 23.206
permit, 23.201
wires, cutting, 23.207, 23.208

MUNICIPAL CODE: 33.101

MUNICIPAL PARKING LOTS: general provisions, 13.1001 - 13.1003

MUNICIPAL RETAILERS OCCUPATION TAX – general provisions, 17.301 – 17.304

NIGHT CLUBS: 18.008

9-1-1 COMMUNICATING SYSTEMS GOVERNING BOARD
general provisions, 11.1501 - 11.1508
area of service, 11.1502
exemption of taxation, 11.1506
formation, 11.1501
powers, 11.1504
amendments, 11.1508
budget, 11.1507
funding, 11.1505
governing board, 11.1503

NITRO-GLYCERINE, 31.105

NUISANCES: general provisions, 21.101 - 21.110
dangerous buildings, 21.101,
certain plants as, 21.101(6)

OFFICERS AND EMPLOYEES: general provisions, 13.101 - 13.127
appointments, 13.102
arrests, 13.115
bonds, 13.113
impersonation, 13.117
interference with, 13.118
money receipts, 13.109
office hours, 13.106
residency, 13.127
term of office, 13.103, 13.104, 13.116
appointments by mayor, 1.003
bids, 13.1612 - 13.1622
duties, 13.107
inspections, 15.011
legal representation, 13.120
oath, 13.112
records, 13.108
salaries, 13.105, 13.114
vacations, 13.119

OPEN BURNING: general provisions, 21.501 - 21.507

ORDINANCES
approval, 2.105
fluoride, 33.401
read three times, 2.207
streets, establishing, naming, vacating, 33.401
drafting, 6.005
naming streets, 33.401
veto, 2.105, 2.106

OVERHANGING SIGNS: general provisions, 14.501 - 14.510
application for permit, 14.502
permit, fee, 14.503
signs over sidewalk, 14.503
inspections, 14.503
requirements, 14.503
supervision, 14.505

PAMPHLETS
dropping from plane, 31.119
handbills, 19.1101

PARKING LOTS, MUNICIPAL
manner of parking, 13.1001
vehicles permitted, 13.1002

PARKING RULES: 20.501

PARKS: 13.710

PEACE DISTURBANCE: 31.101

PEDDLERS: general provisions, 19.601 - 19.613
definitions, 19.602
fraud, 19.612
issuance, 19.607
limitations, 19.611
revocation, 19.608
fees, 19.606
identification card, 19.609
license, 19.603, 19.604
penalty, 19.613

PENALTIES: general provisions, 31.001 - 32.009

PHONE BOOTHS: 31.120

PIPE AND PIPING: flammable liquids, 27.021 - 27.027, 27.039

PERSONNEL CODE: general provisions, 13.210 - 13.261
collective bargaining, 13.260, 13.261
insurance, 13.255
retirement plan, 13.254
holidays, 13.251
leave of absence, 13.252
vacations, 13.253

PLAN COMMISSION: general provisions, 11.501 - 11.503
appointment, 11.501
duties, 11.503
land subdivisions, 13.701 - 13.719
plat, approval, 11.503
records, 11.502
subdivisions, 11.503
compensation, 11.501
expenditures, 11.503
membership, 11.501
procedure, 11.502
report, annual, 11.502
term of office, 11.501

PLANTS AND WEEDS: nuisance abatement, 21.101

PLATS
approval, 11.503, 13.702
new subdivisions, 13.704

PLUMBING: general provisions, 24.101 - 24.107
connection cost, 23.101
fees, 24.102
house drain, 24.106
inspection, 24.103, 24.105
inspector, 24.101
outhouses prohibited, 24.503
National Plumbing Code, 24.108, 24.202 24.304
permits, 24.101
rain water drains, 24.105
prohibited substances, 24.502, 24.708
separate drainage, 24.106
separate connections, storm and sanitary sewer, 24.708
septic tanks, 24.201 - 24.204
sewage disposal facilities, 24.201
sewer connections, 24.106, 24.703
sewer permits, 24.101, 24.702
sewers, 24.701
standards, 24.107
state plumbing code, 23.101, 24.108
storm water, 24.802, 24.803
swimming pools, 24.301 - 24.310
tests, 24.104
tile sewers, connections, 24.107
water entrance pipes, 24.107

PLUMBING INSPECTOR
appointment, 10.404
duties, 24.101 - 24.105
inspections, 24.103, 24.106

POLICE DEPARTMENT: general provisions, 9.001 - 9.017
alarms, false, 31.146
assistance to police, 31.137
auxiliary police, 9.014
conduct, 9.007
chief, 9.001-9.003, 9.009, 9.011, 9.012
creation, 9.001
deputy chiefs, 9.017
duties, 9.003, 9.004
Fire & Police Commission, 11.601-11.626
members, 9.004 - 9.008
members, appointment, 9.005
members, duties, 9.004
nuisance, chief to abate, 9.004, 21.102
park district, 9.015
pension fund, 11.301, 11.302
process served, 9.006
Quincy Housing Authority, 9.016
rules, regulations, 9.009
special police, 9.010
stolen property, 9.011
taxicab driver's license, 19.903
taxicab inspections, 19.945
traffic direction, 20.102
witness fees, 9.008

POLICE PENSION FUND: general provisions, 11.301 - 11.302

POOL HALLS: 16.201

POOLS: stagnant, 21.404

POSTING BILLS: 31.122

PRECINCTS: 2.401

PRISONERS: 13.1501

PRIVATE SECURITY & FIRE ALARM SYSTEM: general provisions, 19.301-19.321

PROCESSIONS: general provisions, 20.338 - 20.340

PROFANITY: 31.103

PROSTITUTION: 31.108

PUBLIC BUILDINGS: general provisions, 30.501 - 30.508
- alcoholic liquor, sale in, 18.014
- doors, 30.506
- exit lights, 30.507
- fire prevention, 30.503 - 30.505
- flammable liquids storage, 27.010
- injury to, 13.904
- penalty, 30.508

PUBLIC DANCES: general provisions, 16.601 - 16.610
- conduct, 16.605
- exemption, 16.602
- fee, 16.603
- investigation, 16.603
- license, 16.601
- premises, requirements, 16.604
- license suspension/revocation, 16.606

PUBLIC GATHERING: general provisions, 30.601 - 30.607
- see public buildings, 30.501
- doors, 30.605
- exits, 30.603
- inspection of premises, 30.602
- notice to fire chief, 30.606
- penalty, 30.607
- seats, 30.604

PUBLIC IMPROVEMENTS - PLANNING & PURCHASING
- Director of Planning & Development, 10.401
- Director of Purchasing, 10.202

PUBLIC UTLITY: wires, cutting, 23.205

PUBLIC UTILITY ORDINANCES: 33.402

PURCHASE TAX: general provisions, 17.301 - 17.304
- direct payment, 17.302
- tax imposed, 17.302
- transaction not taxable, 17.303

PURCHASING: general provisions, 13.1601 - 13.1603
- conflict of interest, 13.1624, 13.1625
- contract formation, 13.1608-13.1622
- dept. of purchasing, 13.1604, 13.1605
- director of purchasing, 10.201
- joint purchasing, 13.1623
- specifications, 13.1606, 13.1607

QUINCY BAY: see boat regulations, 13.601

QUINCY CITY TREE BOARD: general provisions, 11.1201 - 11.1205

QUINCY ECONOMIC DEVELOPMENT LOAN COMMITTEE
general provisions, 11.1601 - 11.1605

QUINCY HOUSING AUTHORITY: Quincy Police Department, 9.016

QUINCY PARK DISTRICT
cannabis, 31.154
penalties, 32.002
Quincy Police Department, 9.015
legal department, 6.010
Plan Commission, 11.501

QUINCY PRESERVATION COMMISSION: general provisions, 11.1401 - 11.1403

RAFFLES: general provisions, 34.001 - 34.008
definitions, 34.001
requirements, 34.003
licensing, 34.002

RAFTS: 13.504

RAINWATER DRAINS: 24.801

RAVINES: obstructing, 31.127

REAL ESTATE ORDINANCES: 33.401

RECYCLING SERVICES CHARGES: general provisions, 24.1201 - 24.1203

REFRIGERATORS: abandoned, 31.125

REFUSE
nuisance abatement, 21.101
combustible, 31112
garbage, 21.301
deposit, 21.405, 21.101

REPEALING CLAUSE: general provisions, 33.401 - 33.404

RESCINDED ACTION: 2.202

RESOLUTION: to be in writing, 2.203

RESUBDIVISION: 13.716

RIGHT OF ENTRY: general provisions, 13.1201 - 13.1202

RISK MANAGEMENT/HUMAN RESOURCES DIRECTOR: 10.502(b)

ROBERT'S RULES OF ORDER: 2.206

ROCKETS, LAUNCHING: 31.125

SALES
- service occupation tax, 17.401-17.403
- use tax, 17.501 - 17.504
- purchase tax, 17.301-17.304

SCAFFOLDS: overhanging in public way, 31.129

SCHOOL CROSSING GUARDS: appointment, 9.013

SECOND HAND STORES: general provisions, 19.701 - 19.707
- inspections, 19.705
- penalty, 19.707
- records, 19.704
- license, 19.702
- purchasing from minors, 19.706

SEPTIC TANKS: general provisions, 24.201 - 24.204

SERVICE OCCUPATION TAX: general provisions, 17.401 - 17.403

SEWERS: general provisions, 24.701 - 24.710; 24.801 - 24.825
- charges, 24.706
- contiguous land, 13.1102
- disposal facilities, 24.201
- extensions, 24.704
- inspections, 24.707, 24.709
- non-contiguous land, 13.1102
- plumbing, 24.101
- public sewers, 24.501 - 24.505
- recommendation by Plan Commission 13.1103
- connections, 24.703
- definitions, 24.401 - 24.413
- enforcement, 24.901-24.906
- flammable liquid, 27.009
- lift stations, 24.705
- permits, 24.101, 24.702
- private disposal, 24.601, 24.602
- sewer user charge, 24.1201-24.1211
- tapping fees, 24.706
- tile connections, 24.106

SHOOTING GALLERIES: general provisions, 16.701 - 16.706
- conduct, 16.703
- license, 16.701
- safety regulations, 16.705
- fees, 16.702
- penalty, 16.706
- sanitary regulations, 16.704

SIGN CONTRACTORS: 29.1405

SIGNALS
- drivers, 20.304
- light, 20.105, 20.331
- traffic, 20.104, 20.105
- turn, 20.402
- hand, 20.305
- obedience to, 20.104, 20.203
- train, 20.333

SIGNS, AWNINGS & SIMILAR DEVICES: general provisions, 14.501 - 14.510
exceptions and maintenance, 14.504
installation and maintenance, 14.504
removal, 14.507
liability, 14.506
permits and fees, 14.503
supervision, 14.505

SISTER CITY COMMISSION: general provisions, 11.1901 - 11.905

SKATING RINKS: general provisions, 16.801 - 16.806
fee, 16.803
license, 16.801
music regulations and conduct, 16.805
investigation, 16.802
penalty, 16.806
premises, 16.804

SLINGSHOTS: 31.118

SMOKE: dense, 21.413

SMOKE DETECTORS: general provisions, 23.701 - 23.706

SNOW: depositing or piling, 31.126

SNOW REMOVAL: general provisions, 14.701 - 14.703

SOLICITORS: general provisions, 19.801 - 19.809
definitions, 19.802
issuance, 19.805
limitation, 19.808
penalty, 19.809
identification, 19.807
license, 19.801
revocation, 19.806

SOUND AMPLIFIERS: general provisions, 30.701 - 30.705
penalty, 30.705
permit, 20.701 - 30.703

SPITTING: 21.412

STAIRWAYS: obstructing, 31.132

STEALING: 31.148

STOLEN PROPERTY: custody, 9.011

STORAGE TANKS: 27.005

STREET AND BRIDGE COMMITTEE: 13.402

STREET CLEANING: general provisions, 14.801 - 14.804

STREET LAMPS: injury to, 31.143

STREETS AND SIDEWALKS: general provisions, 14.101 - 14.123
barricades, 14.109, 14.110
bond, 14.103
construction, 14.102
debris, dropping on, 20.328
deposits on sidewalks, 14.115
drains, obstructing, 14.116
encroachments, 14.112
extensions, 13.717
games on, 14.119
gas pumps, 14.118
hoisting materials, 14.122
injury to, 14.105 - 14.113
moving buildings, 23.201
new subdivisions, 13.716
no parking signs, excavations, 14.308
openings, 14.120, 14.303, 14.305, 14.306, 14.603
repairs, 14.106
sidewalks, excavations blocking, 14.310
specifications, 14.104
street parades, circus, etc. 16.102, 16.401
surface restoring, 14.311
traffic signs, posts, 20.517
trucks, driving on, 20.343
bench marks, 13.903
building materials on, 23.501
datum, 13.903
defects, 14.107
deposits on streets, 14.114
driveways, 14.201 - 14.207
excavations, 14.301 - 14.313
fences, 14.121
garbage deposits, 21.304
grades, 14.203
improvements, 13.712
merchandise, display on, 14.111
new pavement, injury to, 14.105
obstructions, 14.108
overhanging signs, 14.501
penalty, 14.123
private use, 14.111
resurfacing openings, 14.305, 14.306
selling on, 14.404
street number, 13.301
subsidewalk space, 14.601
through, 20.329
trees, 14.401

SUBDIVISIONS: general provisions, 13.701 - 13.720
amendments, 13.715
building lines, 13.708
definitions, 13.701
final plat, 13.704
lots, 13.707
penalty, 13.720
plats, approval, 13.702, 13.712
regulations, enforcement, 13.718
school sites, 13.710
streets, alleys and easements, 13.705
variations and exceptions, 13.713
blocks, 13.706
character of developments, 13.709
easements, 13.705, 13.711
improvements, 13.712
park sites, 13.710
Plan Commission, 11.501
preliminary plan, 13.703
resubdivisions, 13.716
street extensions, 13.717
utilities approval, 13.713

SUBSIDEWALK SPACE: general provisions, 14.601 - 14.609
applications, 14.602
fees, 14.604
permit, 14.601
sidewalk, 14.607
construction, 14.606
openings, 14.603
revocation of permits, 14.608
use, 14.605

SURETY BONDS: 13.906

SWIMMING POOLS: general provisions, 24.301 - 24.310
application of provisions, 24.301
electric equipment, 24.306
inspections, 24.308
penalty, 24.311
safety equipment, 24.303
water supply, 24.305, 24.307
aprons, 24.301
infectious disease, 24.309
maintenance, 24.307
plumbing, 24.304
scum disposal, 24.302

TAG DAYS: general provisions, 30.301 - 30.303

TAXICABS: general provisions, 19.901 - 19.979
alcoholic beverages, 19.958
definition, 19.901
display of license, 19.908, 19.921, 19.948
disorderly conduct, 19.974
issuance of license, 19.906, 19.916
license fee, 19.906, 19.918
limousine, 19.929 - 19.933
penalty, 19.979
Quincy Municipal Airport, 19.966
rates, 19.931
register, 19.921
seating arrangement, 19.965
transfer fees, 19.920
condition of cab, 19.947
disclaimer, 19.946
display of plate, 19.921
fare disputes, 19.942
license application, 19.904, 19.915
license renewal, 19.907, 19.919
log, 19.967
public hearing, 19.917
qualifications, 19.905, 19.916
receipts, 19.956
revocation of license, 19.909
taxicab inspection, 19.459
zones, 19.939

TAX LEVY ORDINANCE: 33.401

TELEPHONE APPARATUS: injury to, 31.143

TELEPHONE BOOTHS: outdoor, 31.120

TENTS: 30.602

TITLE INTERPRETATION: general provisions, 33.101 - 33.108

TOBACCO REGULATIONS/MINORS: general provisions, 30.201 - 30.204

TOY VEHICLES: 20.336

TRAFFIC: general provisions, 20.101 - 20.1101
accidents, 20.803
alcoholic liquor, drivers using, 20.802
angle parking zones, 20.507
arrests, fleeing to avoid, 20.346
bicycle, alteration/dismantling, 20.702
dealers, 20.701
equipment required, 20.703
alleys, parking in, 20.516
alleys, through traffic, 20.348
animals in, 20.107
back regulations, 20.341
blind pedestrians, 20.207
bus zones, 20.514
cab stands, 20.514

regulations, 20.701 - 20.705
penalty, 20.705
riding, 20.107, 20.322, 20.334
debris, dropping on street, 20.328
directions at scene of fire, 20.103
driver's signal, 20.304
driving on right side of roadway, 20.312
drug users, 20.802
emergency vehicles, 20.108, 20.318
exemptions, 20.108
fire hose, driving over, 20.344
funeral processions, 20.338 - 20.340
improper driving, 20.319
laned roadways, driving regulations, 20.317
light signals, 20.15, 20.331
motorcycles, 20.322, 20.334
no parking zones, general, 20.512
obedience to police, 20.102
one-way streets, 20.332
overtaking vehicles, 20.314 - 20.316
parked vehicles, starting, 20.303, 20.308
parking for handicapped, 20.519
parking on sidewalk, 20.505
parking, uptown, 20.601 - 20.620
hours of operation, 20.610
enforcement mark, 20.608
lots, equipment, injury to, 20.609
penalties, 20.620
parking places, 20.605
penalty clause, 20.1101
processions, 20.338 - 20.340
right-of-way vehicles, 20.201, 20.307
rules for driving, 20.301 - 20.348
running boards, riding on, 20.337
scene of fire, 20.103
school no parking zones, 20.508
school speed zones, 20.320.1-20.320.3
signals, obedience to, 20.104, 20.203
stopping before driving from alleys, driveways, garages, 20.326
taxicab parking, 20.513
toy vehicles, 20.336
truck parking zones, 20.502
clinging to vehicles, 20.325
condition of vehicle, 20.401-20.412
definitions, 20.101
doors, opening, 20.347
drivers, 20.801 - 20.807
accidents, 20.802, 20.806
age limit, 20.801
liquor or drugs, 20.802
excavations, no parking, 14.308
fire lanes, 20.506
following fire apparatus, 20.327
hand signals, 20.305
interference with signs, 20.106
length of vehicles, 20.406
manner of parking, 20.606
non-boulevard stops, 20.330
no stopping places, 20.501
obstructing, 20.321
overtime parking, 20.607
painted parking lines, 20.510
parking at curb, 20.509
parking in parkway, 20.504
parking zones, 20.603
parking regulation signs, 20.517
parking rules, 20.501 - 20.520
parking vehicle for sale, 20.511
passing vehicles, 20.313
pedestrians, 20.201 - 20.207
blind pedestrians, 20.207
right-of-way, 20.201
signals, 20.203
standing on sidewalk, 20.204
walking on roadway, 20.206
safety zone, driving in, 20.306
school crossing guards, 9.013
signals, 20.104, 20.105
signs, 20.104, 20.517
speed restrictions, 20.320
stopping for passengers and merchandise, 20.515
through streets, 20.329
train signals, 20.333
truck regulations, 20.343

turning regulations, 20.301, 20.302, 20.304, 20.309 - 20.311
turn signals, 20.402
two hour parking zones, 20.503
unattended animals, 20.324
unattended vehicles, 20.323
unauthorized signs, 20.106
unlawful parking, 31.147
vehicle loads, 20.406
vehicle weight, 20.412
weight limitations, 20.342
yield right-of-way, 20.326, 20.345
zone of quiet, 30.801

TRAFFIC COMMISSION
appointment, 11.801
duties, 11.802
meeting, 11.803

TRAIN SIGNALS: 20.333

TRANSIT ADVISORY COMMISSION: general provisions, 11.1001 - 11.1006

TRAPSHOOTING: 19.1301

TRASH PICK-UP CONTAINERS: 31.151

TREES AND SHRUBBERY: general provisions, 14.401 - 14.417
condemned, 21.101
dangerous, 14.410
definition, 14.402
diseased, 14.410, 21.101
excavations, 14.415
gas pipes, 14.413
injury to, 14.412, 31.139
permitted species, 14.403
planting/trimming, 10.304, 14.408, 14.409
removal, 14.408
wires, 14.407

TRESPASS: 31.138

TRUANCY: 31.155

TRUCKS
flammable liquid, 27.050
parking limits, 20.502
prohibited on certain streets, 20.343

USE TAX: general provisions, 17.501 - 17.504

VACATING STREETS ORDINANCE: 33.401

VAGABONDAGE: 31.140

VAGRANTS: 31.134

VANDALISM: general provisions, 31.201 - 31.204

WARDS, 2.301

WASTEWATER
definitions, 24.401 - 24.413
industrial cost recovery, 24.1101 - 24.1110, 24.1201 - 24.1211
service charge, 24.1001 - 24.1006

WATER: general provisions, 25.101 - 25.104
classes for fire protection, 25.205
cross connection, 25.501 - 25.511
groundwater consumption and use, 25.207
non-contiguous land, 13.1101, 25.203
plumbers, 25.401 - 25.406
recommendation by Plan Commission 13.1103
residential outside city limits, 25.206, 25.303, 25.304
termination of service, 25.308
contiguous land, 13.1102, 24.203
extension to system, 13.1101, 25.305
lien for non-payment, 24.309
plats, 13.704
rates, 25.303
rates for fire protection, 25.304
service for fire protection, 25.205
supply for trailer coach parks, 19.1016
Waterworks Commission, 25.101

WATER AND SEWER EXTENSIONS: general provisions, 13.1101 - 13.1103
contiguous tracts, 13.1102
recommendation of Plan Commission, 13.1103
sewer permits, 24.702
non-contiguous lands, 13.110
sewage lift stations, 24.705
sewer connection fees, 24.1003
sewer taps, 24.706

WEAPONS: concealed, 31.111

WEEDS: 21.101

ZONING: general provisions, 29.101 - 29.1415
accessory uses and buildings,
fences, 29.705
location of buildings, 29.704
permitted uses, 29.702
signs, 29.1401
building lines, 13.708
denial, 29.1201(10)
district intent and purpose, 29.103
height regulations definitions, 29.301
height regulations maximum limit, 29.302
landmarks and historic districts, 29.1001
amending or rescinding, 29.1010
application, 29.1007, 29.1014
comments and review, 29.1013
declaration, 29.1001
definitions, 29.1003
demolition, 29.1012
designation, 29.1006, 29.1009
district, 29.1002
administrator, 10.405
adult entertainment, 29.101
amendments and changes, 29.1201
bed and breakfast, 29.101, 29.203
Board of Zoning Appeals, 11.701
definitions, 29.101
district established, 29.102
home occupation, 29.701
height regulations exceptions, 29.303
height reconstruction, 29.304
lots minimum areas & widths, 29.501
reconstruction, 29.503
substandard lots, 29.502
non-conforming uses, 29.801
parking regulations, 29.601-29.604
definitions, 29.601
enlargements, 29.604
general rules, exceptions, 29.603
off-street spaces, 29.602

general provisions, 29.1004
penalties, 32.002
protection, 29.1011
purposes, 29.1002
review and application, 29.1008
survey and research, 29.1005
planned developments, 29.901 - 29.917
sign contractors, 29.1405
signs, 29.1401 - 29.1415
site plan review, 29.1501 - 29.1505
special permits, 29.203
use of premises, adult use, 29.203(2)
alcoholic beverages, 29.203(2)
central business district, 29.202(10)
commercial district, 29.202(8)
heavy industrial district, 29.202(11)
local commercial district, 29.202(7)
non-conforming uses, 29.801
planned commercial district, 29.202(9)
planned industrial district, 29.202(1)
single family district, 29.202(3)
within city & corporate limits, 29.202
yard regulations, 29.401 - 29.405
permits
amendments, 29.1105
application, 29.1103, 29.1104
approval, 29.1108
completion of existing buildings, 29.1106
conditions, 29.1109
fees, 29.1101
form, 29.1102
limitations, 29.1111
occupancy, certificate of, 29.1114
posting, 29.1112
revocation, 29.1113
when required, 29.1101
signature, 29.1110
light industrial district, 29.202(10)
multi-family districts, 29.202(5)
resort district, 29.202(2)
rural district, 29.202(2)
special permits, 29.203
two family district, 29.202(4)
violation & penalty, 29.1301

ZONING BOARD OF APPEALS: general provisions, 11.701 - 11.710
appeals, 11.705
duties, 11.704
permits, 11.710
public hearings, 11.710
term, 11.702
creations & appointment, 11.701
meetings, 11.703
powers, exceptions, 11.707
interpretation, 11.706
variations, 11.708