Addendum #1	County	Adams
	Local Public Agency	Quincy
September 7, 2016	Project Number	MR 599B
	2016 Capital Roadway Improvements – Wards 4 and 7	

To all bidders of record for the Work Titled:

2016 Capital Roadway Improvements – Wards 4 and 7

This addendum forms a part of the bidding and contract documents and modifies the original bidding documents dated September 1, 2016. Summary of changes:

Contract Proposal

1. **SCHEDULE OF PRICES (Pages 4 to 6)** - Additional pay items have been added for pavement patching and water main fittings.

Special Provisions

1. The Contractor is responsible for furnishing the various water main and water service fittings and related items. Any references to materials being supplied by the City of Quincy have been removed.

2. A pay item for Temporary Access has been added.

3. Other various changes are highlighted.

Construction Plans

1. **SHEETS 3, 4 of 44** - Updated pay items and quantities.
.

2. **SHEET 5 of 44** - Modified detail for the concrete gutter.

3. **SHEET 8 of 44** - Seperated the adjustment of valve boxes and curb boxes into individual pay items.

4. **SHEET 10 of 44** - Corrected station labels in the Sidewalk Elevation table.

5. **SHEETS 17-23 of 44** - Added elevation labels for the edge of pavement.

6. **SHEETS 24-27 of 44** - Extended project limits to include milling and resurfacing into South 6th and South 8th streets.

7. **SHEETS 37 & 41 of 44** - Updated water main plan and details.

8. **SHEET 44 of 44** - Clarified limits of sewer service replacement ot just outside of the trench wall.

Addendum #1 - 9/7/2016

Local Public Agency
Formal Contract Proposal

PROPOSAL SUBMITTED BY	
Contractor's Name	
Street P.O	. Box
City State	Zip Code

STATE OF ILLINOIS

COUNTY OF Adams

Quincy
(Name of City)

FOR THE IMPROVEMENT OF

2016 Capital Roadway Improvements – Wards 4 and 7

PROJECT NO. MR 599B

TYPES OF FUNDS Capital

☒ SPECIFICATIONS (required) ☒ PLANS (required)

Note: All proposal documents, including Proposal Guaranty Checks or Proposal Bid Bonds, should be stapled together to prevent loss when bids are processed.

RETURN WITH BID

NOTICE TO BIDDERS	County	Adams
	Local Public Agency	Quincy
	Project Number	MR 599B
	2016 Capital Roadway Improvements – Wards 4 and 7	

Sealed proposals for the improvement described below will be received at the office of City Clerk,
730 Maine Street, Quincy, Illinois 62301 (Address) until 11:00 AM (Time) on September 14, 2016 (Date)

Sealed proposals will be opened and read publicly at the office of Council Chambers
730 Maine Street, Quincy, Illinois 62301 (Address) at 11:00 AM (Time) on September 14, 2016 (Date)

DESCRIPTION OF WORK

Name 2016 Capital Roadway Improvements – Wards 4 and 7 Length: - feet (- miles)

Location Lincoln Hill Northwest (Ward 4) and Ohio Street from South 6th to South 8th (Ward 7)

Proposed Improvement Roadway and alley reconstruction involving: HMA pavement, PCC pavement, curb and gutter, storm sewers, sanitary sewers, water mains, and related appurtenances.

1. Plans and proposal forms will be available in the office of Department of Utilities and Engineering
   730 Maine Street, Quincy, IL 62301 (Address)
2. The Awarding Authority reserves the right to waive technicalities and to reject any or all proposals as provided in BLRS Special Provision for Bidding Requirements and Conditions for Contract Proposals.
3. The following forms shall be returned by the bidder to the Awarding Authority:
   a. Local Public Agency Formal Contract Proposal
   b. Schedule of Prices
   c. Proposal Bid Bond
4. **Pre-qualification: Any contractor desiring to submit a bid shall be prequalified in accordance with the rules of the IL Department of Transportation, adopted at 44 Illinois Administrative CodeSection 650, prior to being granted authorization to bid.**
5. The quantities appearing in the bid schedule are approximate and are prepared for the comparison of bids. Payment to the Contractor will be made only for the actual quantities of work performed and accepted or materials furnished according to the contract. The scheduled quantities of work to be done and materials to be furnished may be increased, decreased or omitted as hereinafter provided.
6. Submission of a bid shall be conclusive assurance and warranty the bidder has examined the plans and understands all requirements for the performance of work. The bidder will be responsible for all errors in the proposal resulting from failure or neglect to conduct an in depth examination. The Awarding Authority will, in no case be responsible for any costs, expenses, losses or changes in anticipated profits resulting from such failure or neglect of the bidder.
7. The bidder shall take no advantage of any error or omission in the proposal and advertised contract.
8. If a special envelope is supplied by the Awarding Authority, each proposal should be submitted in that envelope furnished by the Awarding Agency and the blank spaces on the envelope shall be filled in correctly to clearly indicate its contents. When an envelope other than the special one furnished by the Awarding Authority is used, it shall be marked to clearly indicate its contents. When sent by mail, the sealed proposal shall be addressed to the Awarding Authority at the address and in care of the official in whose office the bids are to be received. All proposals shall be filed prior to the time and at the place specified in the Notice to Bidders. Proposals received after the time specified will be returned to the bidder unopened.
9. Permission will be given to a bidder to withdraw a proposal if the bidder makes the request in writing or in person before the time for opening proposals.

RETURN WITH BID

PROPOSAL	County	Adams
	Local Public Agency	Quincy
	Project Number	MR 599B
	2016 Capital Roadway Improvements – Wards 4 and 7	

1. Proposal of _____

   for the improvement of the above section by the construction of 2016 Capital Roadway Improvements – Wards 4 and 7

   a total distance of - feet, of which a distance of - feet, (- miles) are to be improved.

2. The plans for the proposed work are those prepared by City of Quincy Department of Utilities and Engineering and dated September 1,2016.

3. The specifications referred to herein are those prepared by the Department of Transportation and designated as "Standard Specifications for Road and Bridge Construction" and the "Supplemental Specifications and Recurring Special Provisions" thereto, adopted and in effect on the date of invitation for bids.

4. The undersigned agrees to accept, as part of the contract, the applicable Special Provisions indicated on the "Check Sheet for Recurring Special Provisions" contained in this proposal.

5. The undersigned agrees to complete the work within **60** working days.

6. A proposal guaranty in the proper amount, as specified in BLRS Special Provision for Bidding Requirements and Conditions for Contract Proposals, will be required. Bid Bonds will be allowed as a proposal guaranty. Accompanying this proposal is either a bid bond if allowed, on Department form BLR 12230 or a proposal guaranty check, complying with the specifications, made payable to:

   City of Quincy Treasurer of _____

   The amount of the check is _____ (_____).

7. In the event that one proposal guaranty check is intended to cover two or more proposals, the amount must be equal to the sum of the proposal guaranties, which would be required for each individual proposal. If the proposal guaranty check is placed in another proposal, it will be found in the proposal for: Section Number _____.

8. The successful bidder at the time of execution of the contract will be required to deposit a contract bond for the full amount of the award. When a contract bond is not required, the proposal guaranty check will be held in lieu thereof. If this proposal is accepted and the undersigned fails to execute a contract and contract bond as required, it is hereby agreed that the Bid Bond or check shall be forfeited to the Awarding Authority.

9. Each pay item should have a unit price and a total price. If no total price is shown or if there is a discrepancy between the product of the unit price multiplied by the quantity, the unit price shall govern. If a unit price is omitted, the total price will be divided by the quantity in order to establish a unit price.

10. A bid will be declared unacceptable if neither a unit price nor a total price is shown.

11. The undersigned submits herewith the schedule of prices on BLR 12200a covering the work to be performed under this contract.

RETURN WITH BID

SCHEDULE OF PRICES	County	Adams
	Local Public Agency	Quincy
	Project Number	MR 599B
	2016 Capital Roadway Improvements – Wards 4 and 7	

Item No.	Items	Unit	Quantity	Unit Price	Total
1	EARTH EXCAVATION	CU YD	1114		
2	TRENCH BACKFILL	CU YD	1261		
3	GEOTECHNICAL FABRIC FOR GROUND STABILIZATION	SQ YD	4631		
4	TEMPORARY EROSION CONTROL SEEDING	POUND	100		
5	INLET AND PIPE PROTECTION	EACH	5		
6	AGGREGATE BASE COURSE, TYPE A 8"	SQ YD	4631		
7	AGGREGATE BASE REPAIR	TON	700		
8	BITUMINOUS MATERIALS (PRIME COAT)	POUND	9095		
9	BITUMINOUS MATERIALS (TACK COAT)	POUND	2195		
10	HOT-MIX ASPHALT BINDER COURSE, IL- 9.5, N50	TON	477		
11	HOT-MIX ASPHALT SURFACE COURSE, MIX "C", N50	TON	519		
12	PAVEMENT PATCHING, TYPE II, 9 INCH	SQ YD	6		
13	PORTLAND CEMENT CONCRETE DRIVEWAY PAVEMENT, 6 INCH	SQ YD	560		
14	PORTLAND CEMENT CONCRETE SIDEWALK 4 INCH	SQ FT	9770		
15	DETECTABLE WARNINGS	SQ FT	110		
16	PAVEMENT REMOVAL	SQ YD	4332		
17	HOT-MIX ASPHALT SURFACE REMOVAL, 1 1/2"	SQ YD	2297		
18	DRIVEWAY PAVEMENT REMOVAL	SQ YD	478		
19	CURB REMOVAL	FOOT	1859		
20	GUTTER REMOVAL	FOOT	1739		
21	SIDEWALK REMOVAL	SQ FT	10728		
22	PAVEMENT PATCHING, TYPE IV, 6 INCH	SQ YD	107		
23	PAVEMENT PATCHING, TYPE IV, 9 INCH	SQ YD	92		
24	CLASS C PATCHES, TYPE IV, 12 INCH	SQ YD	57		
25	INLETS, TYPE A, TYPE 3 FRAME AND GRATE	EACH	3		
26	INLETS, TYPE A, TYPE 15 FRAME AND LID	EACH	1		

SCHEDULE OF PRICES	County	Adams
	Local Public Agency	Quincy
	Project Number	MR 599B
	2016 Capital Roadway Improvements – Wards 4 and 7	

Item No.	Items	Unit	Quantity	Unit Price	Total
27	MANHOLES TO BE ADJUSTED	EACH	3		
28	MANHOLES TO BE ADJUSTED WITH NEW TYPE 1 FRAME, CLOSED LID	EACH	6		
29	REMOVING MANHOLES	EACH	2		
30	REMOVING INLETS	EACH	4		
31	COMBINATION CONCRETE CURB AND GUTTER, TYPE B-6.12	FOOT	2024		
32	COMBINATION CONCRETE CURB AND GUTTER, TYPE B-6.24	FOOT	69		
33	OBJECT MARKER - TYPE 4	EACH	6		
34	METAL POST - TYPE A	FOOT	66		
35	CONCRETE GUTTER, TYPE V-12.12	FOOT	1654		
36	SEEDING, SPECIAL	SQ YD	3584		
37	TRENCH FRAME AND SOLID COVER - LARGE	FOOT	13		
38	TRENCH FRAME AND SOLID COVER - SMALL	FOOT	102		
39	SANITARY SEWER REMOVAL 8"	FOOT	662		
40	SANITARY SERVICE REPLACEMENT	EACH	8		
41	MANHOLES, SANITARY, 4'-DIAMETER, TYPE 1 FRAME, CLOSED LID	EACH	3		
42	SANITARY SEWER, TYPE 2 8"	FOOT	470		
43	VALVE BOX FRAMES TO BE ADJUSTED	EACH	2		
44	DOMESTIC METER VAULTS TO BE MOVED	EACH	2		
45	ADJUSTING WATER SERVICE LINES	FOOT	120		
46	C900 (DR-18) PVC WATERMAIN, 8"	FOOT	1000		
47	WATER SERVICE LINE 1"	FOOT	1170		
48	6" TAPPING SLEEVE	EACH	2		
49	12" X 8" TAPPING CROSS	EACH	1		
50	6" TAPPING VALVE	EACH	2		
51	8" TAPPING VALVE	EACH	2		
52	8" MJ X 6" PE REDUCER	EACH	2		

RETURN WITH BID

SCHEDULE OF PRICES	County	Adams
	Local Public Agency	Quincy
	Project Number	MR 599B
	2016 Capital Roadway Improvements – Wards 4 and 7	

Item No.	Items	Unit	Quantity	Unit Price	Total
53	FIRE HYDRANTS TO BE REMOVED AND REPLACED	EACH	1		
54	CURB BOXES TO BE ADJUSTED	EACH	12		
55	CURB BOX, ROD, AND LID	EACH	32		
56	CONSTRUCTION LAYOUT, LOCATION 1	LSUM	1		
57	CONSTRUCTION LAYOUT, LOCATION 2	LSUM	1		
58	REMOVAL OF LIGHTING UNIT, NO SALVAGE	EACH	2		
59	TRAFFIC CONTROL AND PROTECTION (SPECIAL), LOCATION 1	EACH	1		
60	TRAFFIC CONTROL AND PROTECTION (SPECIAL), LOCATION 2	EACH	1		
61	TEMPOARY ACCESS (ROAD)	EACH	1		
				TOTAL BID	

CONTRACTOR CERTIFICATIONS	County	Adams
	Local Public Agency	Quincy
	Project Number	MR 599B
	2016 Capital Roadway Improvements – Wards 4 and 7	

The certifications hereinafter made by the bidder are each a material representation of fact upon which reliance is placed should the Department enter into the contract with the bidder.

1. **Debt Deliquency.** The bidder or contractor or subcontractor, respectively, certifies that it is not delinquent in the payment of any tax administered by the Department of Revenue unless the individual or other entity is contesting, in accordance with the procedures established by the appropriate revenue Act, its liability for the tax or the amount of tax. Making a false statement voids the contract and allows the Department to recover all amounts paid to the individual or entity under the contract in a civil action.

2. **Bid-Rigging or Bid Rotating.** The bidder or contractor or subcontractor, respectively, certifies that it is not barred from contracting with the Department by reason of a violation of either 720 ILCS 5/33E-3 or 720 ILCS 5/33E-4.

   A violation of Section 33E-3 would be represented by a conviction of the crime of bid-rigging which, in addition to Class 3 felony sentencing, provides that any person convicted of this offense or any similar offense of any state or the United States which contains the same elements as this offense shall be barred for 5 years from the date of conviction from contracting with any unit of State or local government. No corporation shall be barred from contracting with any unit of State or local government as a result of a conviction under this Section of any employee or agent of such corporation if the employee so convicted is no longer employed by the corporation and: (1) it has been finally adjudicated not guilty or (2) if it demonstrates to the governmental entity with which it seeks to contract and that entity finds that the commission of the offense was neither authorized, requested, commanded, nor performed by a director, officer or a high managerial agent in behalf of the corporation.

   A violation of Section 33E-4 would be represented by a conviction of the crime of bid-rotating which, in addition to Class 2 felony sentencing, provides that any person convicted of this offense or any similar offense of any state or the United States which contains the same elements as this offense shall be permanently barred from contracting with any unit of State or local government. No corporation shall be barred from contracting with any unit of State or local government as a result of a conviction under this Section of any employee or agent of such corporation if the employee so convicted is no longer employed by the corporation and: (1) it has been finally adjudicated not guilty or (2) if it demonstrates to the governmental entity with which it seeks to contract and that entity finds that the commission of the offense was neither authorized, requested, commanded, nor performed by a director, officer or a high managerial agent in behalf of the corporation.

3. **Bribery.** The bidder or contractor or subcontractor, respectively, certifies that it has not been convicted of bribery or attempting to bribe an officer or employee of the State of Illinois or any unit of local government, nor has the firm made an admission of guilt of such conduct which is a matter of record, nor has an official, agent, or employee of the firm committed bribery or attempted bribery on behalf of the firm and pursuant to the direction or authorization of a responsible official of the firm.

4. **Interim Suspension or Suspension.** The bidder or contractor or subcontractor, respectively, certifies that it is not currently under a suspension as defined in Subpart I of Title 44 Subtitle A Chapter III Part 6 of the Illinois Administrative Code. Furthermore, if suspended prior to completion of this work, the contract or contracts executed for the completion of this work may be cancelled.

RETURN WITH BID

SIGNATURES	County	Adams
	Local Public Agency	Quincy
	Project Number	MR 599B
	2016 Capital Roadway Improvements – Wards 4 and 7	

(If an individual)

Signature of Bidder _____

Business Address _____

_____

(If a partnership)

Firm Name _____

Signed By _____

Business Address _____

_____

Inset Names and Addressed of All Partners

_____

_____

_____

_____

(If a corporation)

Corporate Name _____

Signed By _____
President

Business Address _____

_____

Insert Names of Officers

President _____

Secretary _____

Treasurer _____

Attest: _____
Secretary

RETURN WITH BID

Local Agency Proposal Bid Bond	County	Adams
	Local Public Agency	Quincy
	Project Number	MR 599B
	2016 Capital Roadway Improvements – Wards 4 and 7	

PAPER BID BOND

WE _____ as PRINCIPAL,

and _____ as SURETY,

are held jointly, severally and firmly bound unto the above Local Agency (hereafter referred to as "LA") in the penal sum of 5% of the total bid price, or for the amount specified in the proposal documents in effect on the date of invitation for bids whichever is the lesser sum. We bind ourselves, our heirs, executors, administrators, successors, and assigns, jointly pay to the LA this sum under the conditions of this instrument.

WHEREAS THE CONDITION OF THE FOREGOING OBLIGATION IS SUCH that, the said PRINCIPAL is submitting a written proposal to the LA acting through its awarding authority for the construction of the work designated as the above section.

THEREFORE if the proposal is accepted and a contract awarded to the PRINCIPAL by the LA for the above designated section and the PRINCIPAL shall within fifteen (15) days after award enter into a formal contract, furnish surety guaranteeing the faithful performance of the work, and furnish evidence of the required insurance coverage, all as provided in the "Standard Specifications for Road and Bridge Construction" and applicable Supplemental Specifications, then this obligation shall become void; otherwise it shall remain in full force and effect.

IN THE EVENT the LA determines the PRINCIPAL has failed to enter into a formal contract in compliance with any requirements set forth in the preceding paragraph, then the LA acting through its awarding authority shall immediately be entitled to recover the full penal sum set out above, together with all court costs, all attorney fees, and any other expense of recovery.

IN TESTIMONY WHEREOF, the said PRINCIPAL and the said SURETY have caused this instrument to be signed by their respective officers this _____ day of _____

Principal

_____ (Company Name)

By: _____ (Signature and Title)

_____ (Company Name)

By: _____ (Signature and Title)

(If PRINCIPLE is a joint venture of two or more contractors, the company names, and authorized signatures of each contractor must be affixed.)

Surety

_____ (Name of Surety)

By: _____ (Signature of Attorney-in-Fact)

STATE OF ILLINOIS,

COUNTY OF _____

I, _____, a Notary Public in and for said county,

do hereby certify that _____

(Insert names of individuals signing on behalf of PRINCIPAL & SURETY)

who are each personally known to me to be the same persons whose names are subscribed to the foregoing instrument on behalf of PRINCIPAL and SURETY, appeared before me this day in person and acknowledged respectively, that they signed and delivered said instruments as their free and voluntary act for the uses and purposes therein set forth.

Given under my hand and notarial seal this _____ day of _____

My commission expires _____ _____ (Notary Public)

ELECTRONIC BID BOND

☐ **Electronic bid bond is allowed (box must be checked by LA if electronic bid bond is allowed)**

The Principal may submit an electronic bid bond, in lieu of completing the above section of the Proposal Bid Bond Form. By providing an electronic bid bond ID code and signing below, the Principal is ensuring the identified electronic bid bond has been executed and the Principal and Surety are firmly bound unto the LA under the conditions of the bid bond as shown above. (If PRINCIPAL is a joint venture of two or more contractors, an electronic bid bond ID code, company/Bidder name title and date must be affixed for each contractor in the venture.)

Electronic Bid Bond ID Code

_____ (Company/Bidder Name)

_____ (Signature and Title) _____ Date

CHECK SHEET
FOR
RECURRING SPECIAL PROVISIONS

Adopted April 1, 2016

The following RECURRING SPECIAL PROVISIONS indicated by an "X" are applicable to this contract and are included by reference:

RECURRING SPECIAL PROVISIONS

CHECK SHEET #			PAGE NO.
1	☐	Additional State Requirements for Federal-Aid Construction Contracts	1
2	☐	Subletting of Contracts (Federal-Aid Contracts)	4
3	☐	EEO	5
4	☐	Specific EEO Responsibilities Non Federal-Aid Contracts	15
5	☐	Required Provisions - State Contracts	20
6	☐	Asbestos Bearing Pad Removal	26
7	☐	Asbestos Waterproofing Membrane and Asbestos Hot-Mix Asphalt Surface Removal	27
8	☐	Temporary Stream Crossings and In-Stream Work Pads	28
9	☐	Construction Layout Stakes Except for Bridges	29
10	☐	Construction Layout Stakes	32
11	☐	Use of Geotextile Fabric for Railroad Crossing	35
12	☐	Subsealing of Concrete Pavements	37
13	☐	Hot-Mix Asphalt Surface Correction	41
14	☐	Pavement and Shoulder Resurfacing	43
15	☐	Patching with Hot-Mix Asphalt Overlay Removal	44
16	☐	Polymer Concrete	45
17	☐	PVC Pipeliner	47
18	☐	Bicycle Racks	48
19	☐	Temporary Portable Bridge Traffic Signals	50
20	☐	Work Zone Public Information Signs	52
21	☐	Nighttime Inspection of Roadway Lighting	53
22	☐	English Substitution of Metric Bolts	54
23	☐	Calcium Chloride Accelerator for Portland Cement Concrete	55
24	☒	Quality Control of Concrete Mixtures at the Plant	56
25	☒	Quality Control/Quality Assurance of Concrete Mixtures	64
26	☐	Digital Terrain Modeling for Earthwork Calculations	80
27	☐	Pavement Marking Removal	82
28	☐	Preventive Maintenance – Bituminous Surface Treatment	83
29	☐	Preventive Maintenance – Cape Seal	89
30	☐	Preventive Maintenance – Micro-Surfacing	104
31	☐	Preventive Maintenance – Slurry Seal	115
32	☐	Temporary Raised Pavement Markers	125
33	☐	Restoring Bridge Approach Pavements Using High-Density Foam	126

CHECK SHEET
FOR
LOCAL ROADS AND STREETS RECURRING SPECIAL PROVISIONS

Adopted April 1, 2016

The following LOCAL ROADS AND STREETS RECURRING SPECIAL PROVISIONS indicated by an "X" are applicable to this contract and are included by reference:

LOCAL ROADS AND STREETS RECURRING SPECIAL PROVISIONS

CHECK SHEET #			PAGE NO.
LRS 1		**Reserved**	130
LRS 2	☐	Furnished Excavation	131
LRS 3	☒	Work Zone Traffic Control Surveillance	132
LRS 4	☒	Flaggers in Work Zones	133
LRS 5	☒	Contract Claims	134
LRS 6	☒	Bidding Requirements and Conditions for Contract Proposals	135
LRS 7	☐	Bidding Requirements and Conditions for Material Proposals	141
LRS 8		**Reserved**	147
LRS 9	☐	Bituminous Surface Treatments	148
LRS 10		**Reserved**	149
LRS 11	☐	Employment Practices	150
LRS 12	☐	Wages of Employees on Public Works	152
LRS 13	☐	Selection of Labor	154
LRS 14	☐	Paving Brick and Concrete Paver Pavements and Sidewalks	155
LRS 15	☐	Partial Payments	158
LRS 16	☐	Protests on Local Lettings	159
LRS 17	☐	Substance Abuse Prevention Program	160
LRS 18	☐	Multigrade Cold Mix Asphalt	161

TABLE OF CONTENTS

DESCRIPTION OF WORK 1
SPECIAL PROVISION FOR EMPLOYMENT PRACTICES 2
CITY OF QUINCY SPECIAL PROVISION FOR EMPLOYMENT OF CITY RESIDENTS 3
CITY OF QUINCY SPECIAL PROVISION FOR SUBSTANCE ABUSE PREVENTION PROGRAM 5
LEGAL REGULATIONS AND RESPONSIBILITY TO THE PUBLIC 6
TRAFFIC CONTROL PLAN 7
STATUS OF UTILITIES TO BE ADJUSTED 9
CONFINED SPACE OPERATIONS 10
SAW CUTTING 11
ITEM 1 - EARTH EXCAVATION 11
ITEM 2 - TRENCH BACKFILL 11
ITEM 3 - GEOTECHNICAL FABRIC FOR GROUND STABILIZATION 12
ITEM 4 - TEMPORARY EROSION CONTROL SEEDING 12
ITEM 5 - INLET AND PIPE PROTECTION 12
ITEM 6 - AGGREGATE BASE COURSE 12
TEST ROLLING OF SUB GRADE AND BASE COURSE 13
ITEM 7 - AGGREGATE BASE REPAIR 13
ITEM 8 - BITUMINOUS MATERIALS (PRIME COAT) 14
ITEM 9 - BITUMINOUS MATERIALS (TACK COAT) 14
ITEM 10 - HOT-MIX ASPHALT BINDER COURSE, IL- 9.5, N50 14
ITEM 11 - HOT-MIX ASPHALT SURFACE COURSE, MIX "C", N50 14
~~ITEM 12 - PROTECTIVE COAT~~ 14
ITEM 13 - PORTLAND CEMENT CONCRETE DRIVEWAY PAVEMENT, 6 INCH 14
ITEM 14 - PORTLAND CEMENT CONCRETE SIDEWALK 15
ITEM 15 - DETECTABLE WARNINGS 15
ITEM 16 - PAVEMENT REMOVAL 15
ITEM 17 - HOT-MIX ASPHALT SURFACE REMOVAL, 1 1/2" 15
ITEM 18 - DRIVEWAY PAVEMENT REMOVAL 15
ITEM 19 - CURB REMOVAL 15
ITEM 20 - GUTTER REMOVAL 15
ITEM 21 - SIDEWALK REMOVAL 15

ITEM 12 - PAVEMENT PATCHING, TYPE II, 9 INCH 15
ITEM 22 - PAVEMENT PATCHING, TYPE IV, 6 INCH 15
ITEM 23 - PAVEMENT PATCHING, TYPE IV, 9 INCH 15
ITEM 24 - CLASS C PATCHES, TYPE IV, 12 INCH 15
ITEM 25 - INLETS, TYPE A, TYPE 3 FRAME AND GRATE 16
ITEM 26 - INLETS, TYPE A, TYPE 15 FRAME AND LID 16
ITEM 27 - MANHOLES TO BE ADJUSTED 16
ITEM 28 - MANHOLES TO BE ADJUSTED WITH NEW TYPE 1 FRAME, CLOSED LID 16
ITEM 29 - REMOVING MANHOLES 17
ITEM 30 - REMOVING INLETS 17
ITEM 31 - COMBINATION CONCRETE CURB AND GUTTER, TYPE B-6.12 17
ITEM 32 - COMBINATION CONCRETE CURB AND GUTTER, TYPE B-6.24 17
ITEM 33 - OBJECT MARKER - TYPE 4 17
ITEM 34 - METAL POST - TYPE A 17
ITEM 35 - CONCRETE GUTTER, TYPE V-12.12 17
ITEM 36 - SEEDING, SPECIAL 18
ITEM 37 - TRENCH FRAME AND SOLID COVER - SMALL 19
ITEM 38 - TRENCH FRAME AND SOLID COVER – LARGE 19
ITEM 39 - SANITARY SEWER REMOVAL 8" 19
ITEM 40 - SANITARY SERVICE REPLACEMENT 20
ITEM 41 - MANHOLES, SANITARY, 4'-DIAMETER, TYPE 1 FRAME, CLOSED LID 21
ITEM 42 - SANITARY SEWER, TYPE 2 8" 21
ITEM 43 - VALVE BOX FRAMES TO BE ADJUSTED 23
ITEM 54 - CURB BOXES TO BE ADJUSTED 23
ITEM 44 - DOMESTIC METER VAULTS TO BE MOVED 23
ITEM 45 - ADJUSTING WATER SERVICE LINES 24
ITEM 46 - C900 (DR-18) PVC WATERMAIN, 8" 24
ITEM 47 - WATER SERVICE LINE, 1" 24
ITEM 48 - 6" TAPPING SLEEVE 24
ITEM 49 - 12" X 8" TAPPING CROSS 24
ITEM 50 - 6" TAPPING VALVE 24
ITEM 51 - 8" TAPPING VALVE 24
ITEM 52 - 8" MJ X 6" PE REDUCER 24
ITEM 53 - FIRE HYDRANTS TO BE REMOVED AND REPLACED 27

ITEM 55 - CURB BOX, ROD, AND LID 27
ITEM 56 & 57 - CONSTRUCTION LAYOUT 29
ITEM 58 - REMOVAL OF LIGHTING UNIT, NO SALVAGE 31
ITEM 61 - TEMPORARY ACCESS (ROAD) 32
PREVAILING WAGE 33
INSURANCE (LR107-4)
FILLING HMA CORE HOLES WITH NON-SHRINK GROUT (LR406)
COARSE AGGREGATE QUALITY (BDE)
ERRATA FOR THE 2016 STANDARD SPECIFICATIONS (BDE)
HOT-MIX ASPHALT – TACK COAT (BDE)
WARM MIX ASPHALT (BDE)
CITY OF QUINCY WATER SERVICE LOCATION DATA

CONSTRUCTION PLANS
ILLINOIS DOT HIGHWAY STANDARDS

The following Special Provisions supplement the "Standard Specifications for Road and Bridge Construction", Adopted April 1, 2016 , the latest edition of the "Manual on Uniform Traffic Control Devices for Streets and Highways", and the "Manual of Test Procedures of Materials" in effect on the date of invitation of bids, and the Supplemental Specifications and Recurring Special Provisions indicated on the Check Sheet included here in which apply to and govern the construction of 2016 Capital Roadway Improvements – Wards 4 and 7, and in case of conflict with any part, or parts, of said Specifications, the said Special Provisions shall take precedence and shall govern.

DESCRIPTION OF WORK

The City of Quincy 2016 Capital Roadway Improvements – Wards 4 and 7 consists of the following:

Job No. 14403: Reconstruction of Lincoln Hill Northwest from North 30th Street to the dead end. Work includes with new HMA pavement, HMA resurfacing, PCC gutter, PCC driveways, PCC sidewalks, new sanitary sewers, and related items.

Job No. 144706: Reconstruction of Ohio Street from South 6th Street to South 8th Street. Work includes with new HMA pavement, HMA resurfacing, PCC curb and gutter, PCC driveways, PCC sidewalks, new 8" water main, new residential water service lines, and related items.

The Director of Utilities & Engineering will be the authorized representative for the City for the purpose of administering this contract.

The Contractor is hereby notified that only City employees may connect to and use City owned fire hydrants. The Contractor may request installation of a fire hydrant meter by the City's Department of Utilities for use as a water source during construction of this project.

SPECIAL PROVISION FOR EMPLOYMENT PRACTICES

In addition to all other labor requirements set forth in this proposal and in the Standard Specifications, during the performance of this contract, the Contractor for itself, its assignees, and successors in interest (hereinafter referred to as the "Contractor") agrees as follows:

I. SELECTION OF LABOR

The Contractor shall comply with all Illinois statutes pertaining to the selection of labor.

II. EQUAL EMPLOYMENT OPPORTUNITY

In the event of the Contractor's non-compliance with the provisions of the Equal Employment Opportunity Clause, the Illinois Human Right's Act, or the Rules and Regulations of the Illinois City of Human Rights ("City"), the Contractor may be declared ineligible for future contracts or subcontracts with the State of Illinois or any of its political subdivisions or municipal corporations, and the contract may be cancelled or voided in whole or in part, and such other sanctions or penalties may be imposed or remedies invoked as provided by statute or regulation. During the performance of this contract, the Contractor agrees as follows:

(1) That it will not discriminate against any employee or applicant for employment because of race, color, religion, sex, national origin, ancestry, age, marital status, physical or mental handicap unrelated to ability, or unfavorable discharge from military service, and further that it will examine all job classifications to determine if minority persons or women are underutilized and will take appropriate affirmative action to rectify any such under utilization.

(2) That, if it hires additional employees in order to perform this contract or any portion hereof, it will determine the availability of minorities and women in the area(s) from which it may reasonably recruit and it will hire for each job classification for which employees are hired in such a way that minorities and women are not underutilized.

(3) That, in all solicitations or advertisements for employees placed by it or on its behalf, it will state that all applicants will be afforded equal opportunity without discrimination because of race, color, religion, sex, national origin, ancestry, age, marital status, physical or mental handicap unrelated to ability or unfavorable discharge from military service.

(4) That it will send to each labor organization or representative of workers with which it has or is bound by a collective bargaining or other agreement or understanding, a notice advising such labor organization or representative of the Contractor's obligations under the Illinois Human Rights Act and the City's Rules and Regulations. If any such labor organization or representative fails or refuses to cooperate with the Contractor in its efforts to comply with such Act and Rules and Regulations, the Contractor will promptly

so notify the Illinois Department of Human Rights and the City of Quincy and will recruit employees from other sources when necessary to fulfill its obligations there under.

(5) That it will submit reports as required by the Department of Human Rights Rules and Regulations, furnish all relevant information as may from time to time be requested by the Department or the City of Quincy, and in all respects comply with the Illinois Human Rights Act and the City's Rules and Regulations.

(6) That it will permit access to all relevant books, records, accounts and work sites by personnel of the City of Quincy and the Illinois Department of Human Rights for purposes of Investigation to ascertain compliance with the Illinois Human Rights Act and the City's Rules and Regulations.

(7) That it will include verbatim or by reference the provision of this clause in every subcontract so that such provisions will be binding upon every such subcontractor. In the same manner as with other provisions of this contract, the Contractor will be liable for compliance with applicable provisions of this clause by all its subcontractors; and further it will promptly notify the City of Quincy and the Illinois City of Human Rights in the event any subcontractor fails or refuses to comply therewith. In addition, the Contractor will not utilize any subcontractor declared by the Illinois Human Rights Commission to be ineligible for contracts or subcontracts with the State of Illinois or any of its political subdivisions or municipal corporations.

CITY OF QUINCY SPECIAL PROVISION FOR EMPLOYMENT OF CITY RESIDENTS

The following Special Provision with its requirements shall be considered as part of this contract and shall apply to all work performed on this project including authorized extra work, extensions of the project limits, and all subcontracts.

A. Ordinance No. 8948

Article I of Chapter 13 of the Municipal Code of the City of Quincy 1980 be and is hereby amended as follows:

> 13.121 Employment of City residents - At least 50% of all of a Contractor's employees working on any construction project involving the use of city funds shall be residents of Adams County, Illinois, unless this requirement shall be waived by the Quincy City Council, and all construction contracts involving the use of city funds, entered into between the City and a Contractor, shall so provide.

B. Ordinance No.8437 - Penalty - Municipal Code

"Any Contractor found to be in violation of the provisions of this Ordinance shall, in addition to other penalties prescribed, be barred from bidding upon construction projects using City funds for a period of two (2) years".

Other Penalties: "Except as otherwise provided for in this code, any person, firm or corporation violating any provision of this code or amendment thereto, shall be guilty of a petty offense and upon conviction thereof, shall be fined an amount not less than twenty-five dollars ($25.00) and not more than five hundred dollars ($500.00)".

C. For purposes of administrating this ordinance, the following is required:

1. Submission of monthly work records for all laborers working under this project, including subcontractors, is required.

2. The 50% requirement is determined by totaling the number of man-hours worked for all laborers, including subcontractors, at the end of the project. Compliance will be determined by the number of man-hours worked on the project and NOT by taking 50% of the total wage rates paid.

3. Subcontractors may or may not meet the 50% resident requirement, but it will be the responsibility of the Prime Contractor to insure that the final total of all man-hours worked by his forces in combination with all subcontractors does meet the 50% resident requirements.

4. Hours worked by truck drivers delivering material to the jobsite shall not be included in the submission of the monthly work records unless said truck drivers are directly employed by the Contractor or subcontractor.

5. All monthly work records submitted shall contain the following minimum information:

I. Laborer's Name and Legal Address of Residence

II. Job Classification

III. Hours worked during the reporting month

IV. A completed statement of certification

Any form containing the required information may be used.

6. Hours worked by laborers off-site, such as at an asphalt or concrete plant, shall not be included in the monthly work record submission.

7. Failure to report all laborers working on the project and their correct number of man-hours worked shall constitute a violation of this ordinance, as will the supplying of any false information.

8. Laborers on this project is hereby defined to include all labor, whether skilled, semi-skilled or unskilled, and whether manual or non-manual.

CITY OF QUINCY SPECIAL PROVISION FOR SUBSTANCE ABUSE PREVENTION PROGRAM

In addition to any and all other labor requirements set forth in this request, the State of Illinois requires:

Before any contractor commences work on a public works program, the contractor shall have in place a written program that meets or exceeds the requirements in "Public Act 095-0635, Substance Abuse Prevention on Public Works Projects Act", or shall have a collective bargaining agreement in effect dealing with the subject matter in the above Act.

The prime contractor and all subcontractors shall file with the Director of Purchasing, City of Quincy, 730 Maine Street, Quincy, Illinois 62301, a copy of the "Substance Abuse Prevention Program" along with a cover letter certifying their program meets or exceeds the requirements of the Act, or a letter certifying that the prime contractor and subcontractors have a collective bargaining agreement in effect dealing with the subject matter of the above Act.

With reference to the above, all programs and letters received shall be retained on file in the office of the Director of Purchasing, and shall be available for public inspection.

In addition to the requirements of Article 107.09 of the Standard Specifications, add the following:

The Contractor shall be required to notify the Engineer at least 7 calendar days prior to the initiation of any work in this proposed improvement.

The Contractor shall be required to notify the Engineer at least 24 hours prior to the closure of the street pavements scheduled for surface removal in this proposed improvement.

The Contractor shall be required to provide a minimum of 24 hour advance notice to any business or residence losing the short term use of their driveway entrance which has direct access to the proposed improvement (or on-street parking in front of their property) due to construction activities. A card or mimeographed notification letter may be used for this purpose. At minimum, the card or letter should contain:

- Name of the Contractor and contact information for any questions or concerns.
- Estimated date, time, and duration of the loss of access.
- Notice that off street parking, if applicable, is prohibited during that time frame.
- Request that no deliveries be made during the time frame of the closure.

The Contractor shall also be responsible for notifying the 9-1-1 Emergency Services Center of the total or partial closure by contacting it at 217/222-9360 (the non-emergency #). The Center in turn will notify the other community emergency services. Information requested will include date of the closure, expected length of closure, and the names of two individuals with telephone numbers to be reached in case of emergency. Failure by the Contractor to notify the 9-1-1 Center in advance of a street closing will be grounds for enforcement and penalties under appropriate city ordinances.

The Contractor and all subcontractors shall not utilize adjoining parking lots of commercial establishments outside the right-of-way or easement areas for any construction equipment, workers vehicles, or any other construction use unless a copy of a written agreement between the Contractor and the property owner is filed with the Engineer.

The City of Quincy will be responsible during the duration of this project for notifying the United States Postal Service of the proposed construction and determining the best method(s) of insuring continued service. The City will also be responsible for contacting other community services such as garbage collection, school bus routes and senior citizen services to insure their continued operation with the least impact on the affected residences.

Due to the location of this project within the street system of Quincy, the required mounting distances of the advance warning signs stipulated on the applicable traffic control standards may be changed at the direction of the Engineer to better accommodate the existing traffic control characteristics and sight visibility at the project site.

LEGAL REGULATIONS AND RESPONSIBILITY TO THE PUBLIC

Revise Article 107.26 Indemnification to include:

The City of Quincy shall not be responsible for the settlement of any damage claims by a motorist(s) resulting from the work being done for this contract. All claims submitted to the City of Quincy shall be forwarded to the Contractor.

TRAFFIC CONTROL PLAN

Traffic Control shall be in accordance with the applicable sections of the Standard Specifications for Road and Bridge Construction, the applicable guidelines contained in the Illinois Manual on Uniform Traffic Control devices for Streets and Highways, these Special Provisions, any special details and Highway Standards contained herein and in the Plans.

Special attention is called to Sections 107, 701, and 703 of the Standard Specifications for Road and Bridge Construction, and as amended by the Supplemental Specifications, Recurring Special Provisions, the Special Provisions contained herein, and the following Highway

Standards relating to traffic control:

701001 701006 701011 701801 701901

Limitations of Construction: The Contractor shall coordinate the items of work in order to keep hazards and traffic inconveniences to a minimum, as specified below.

1. The Contractor shall provide, erect, and maintain all the necessary barricades, cones, drums, and lights for the warning and protection of traffic, as required by Sections 107, 701, and 703 of the Standard Specifications, and as modified.

2. All advance warning signs shall be in new of like new condition at the start of the project. All warning signs shall be 48”x48” and have a black legend on a fluorescent orange reflectorized background.

3. The Contractor will be responsible for the traffic control devices at all times during construction activities and shall coordinate the items of work in order to keep hazards and traffic inconveniences to a minimum.

4. Traffic shall be maintained as described in the traffic control and detour plan or as directed by the Engineer.

5. Parking of construction equipment within the right-of-way will be permitted only at locations approved by the Engineer.

6. All Type III barricades shall be equipped with bi-directional steady burning Type A lights and have high intensity striping on both sides.

Measurement and Payment for Traffic Control and Protection: Traffic control and protection, and other miscellaneous items provided under the requirements of this special provision will be paid for at the contract unit price bid per each for TRAFFIC CONTROL AND PROTECTION (SPECIAL), at the location specified.

All temporary signing required per Traffic Control and Protection Standards and as required per these special provisions will not be paid for separately and will be considered included in the contract cost for traffic control and protection pay items.

Traffic Control Surveillance will be not be measured and paid for separately.

Additional flaggers as needed for various standards, as determined necessary by the Engineer, will not be paid for separately in accordance with Article 109.04 of the Standard Specifications, but cost considered included in the associated traffic control and protection pay item.

All other traffic control and protection required for the completion of this project will not be paid for separately, but will be considered as part of the unit bid prices for the pay items included in the contract.

Access and Road Closures:

Job No. 14403: Access to Lincoln Hill Court Northwest shall be proved at all times other than when milling and paving operations temporarily limit access to the street. Residents along Lincoln Hill Court Northwest shall be notified of these operations as described in the special provision for PUBLIC CONVENIENCE AND SAFETY.

Additional construction access to Lincoln Hill Northwest north of the intersection with Lincoln Hill Court Northwest will be provided with the construction of a temporary all-weather access roadway from Woodlawn Road as described in the special provision for TEMPORARY ACCESS (ROADWAY).

Job No. 14407:

The intersections of South 6th & Ohio, South 7th & Ohio, and South 8th & Ohio may be closed to all traffic for the construction of the water main. No more than one intersection can be closed at a time.

The Contractor shall stage construct Ohio Street so that only one section of Ohio Street will be closed to traffic. The sections shall be: South 6th to mid-block; mid-block to South 7th; and South 7th to South 8th. The Contractor may close each section up to two periods of time in order to construct the mater main and roadway at different times.

STATUS OF UTILITIES TO BE ADJUSTED

All utilities are to be contacted through the JULIE system at 1-800-892-0123.

Name and Address of Utility	Type	Location	Estimated Date Relocation Completed
1. AT&T 529 South 7th, Floor 3B Springfield, Illinois 62703	Telephone Appurtenances	Entire Job	During Construction
2. Ameren Illinois 7th & Jersey Street Quincy, Illinois 62301	Electric and Gas Lines	Entire Job	During Construction
3. City of Quincy Central Services Dept City Hall, 730 Maine Quincy, Illinois 62301	Water Mains and Appurtenances	South 19th	By Contractor
4. City of Quincy Central Services Dept City Hall, 730 Maine Quincy, Illinois 62301	Sanitary and Storm Sewers	Entire Job	By Contractor
5. Comcast 2930 State Street Quincy, Illinois 62301	Cable Lines	Entire Job	No Adjustment Anticipated
6. City of Quincy Engineering City City Hall, 730 Maine Quincy, Illinois 62301	Traffic Detector Loops	Not Present on This Project	No Adjustment Anticipated
7. Lightcore (Digital Teleport, Inc.) 8112 Maryland Ave, 4th floor St, Louis, Missouri 63105	Fiber Optic	Not Present On This Project	Not Applicable
8. McCloud USA 535 West Eldorado, Suite 1 Decatur, Illinois 62522	Fiber Optic	Not Present on This Project	Not Applicable
9. Blessing Hospital 10th & Broadway Quincy, Illinois 62301	Fiber Optic	Not Present on This Project	Not Applicable

CONFINED SPACE OPERATIONS

The Contractor is hereby notified that all existing manholes, both sanitary and storm or combination thereof, all sewer pipe and all stormwater inlets are declared as a confined space as defined by OSHA regulation and which may contain or has the potential to contain a hazardous atmosphere.

The definition of confined space is any enclosed space that has the following characteristics:

1. Is large enough and so configured that an employee can bodily enter and perform assigned work; and
2. Has limited or restricted means for entry or exit; and
3. Is not designed for continuous employee occupancy.

The reconstruction of manholes and inlets will usually result in the removal of the existing structure through the use of equipment operating from the exterior of the structure. Once the structure lid or roof has been removed and the depth of the structure is reduced to less than five (5) feet in depth, it is no longer a confined space.

Work on structures that are to remain and which require work within the interior of the structure is classified as a confined space entry. The Resident Engineer reserves the right to request a copy of the Contractor's "Confined Space Written Program" for review prior to any entry. The Resident Engineer will coordinate with the Contractor in executing a permit space entry meeting OSHA requirements. The Resident Engineer will be available for debriefing the Contractor at the conclusion of the entry operation(s) regarding the permit space program followed and regarding any hazards confronted or created in permit spaces during entry operations.

The City of Quincy maintains its own program on confined space entry. In no case shall the Contractor request any City of Quincy employee or representative of the city of Quincy to enter a confined space without that employee first obtaining clearance under the city's own permit system.

Failure to comply with the OSHA regulations on confined space entry will result in an immediate suspension of the work until such compliance is achieved. Working or calendar days will continue to be assessed during the suspension period.

The Contractor must still comply with all OSHA requirements on trench safety for work on all sewage and stormwater related structures.

The potential hazardous atmosphere that could be encountered in all work associated with sewage and stormwater work includes but is not limited to the following:

A. Methane gas concentrations;

B. Low oxygen concentrations;

C. The presence of hydrogen sulfide, carbon monoxide and other vapors.

SAW CUTTING

Saw cutting for the various removal pay items shall be in accordance with applicable portions of Article 440 of the Standard Specifications. The cost of saw cutting will be included in the unit price for the respective removal pay item.

ITEM 1 - EARTH EXCAVATION

Description: This work shall be in accordance with Section 202 of the "Standard Specifications", plan details, and as modified herein.

Removal of existing bituminous pavement and oil and chip pavement shall be included in the measured quantity for EARTH EXCAVATION.

ITEM 2 - TRENCH BACKFILL

Description: This work shall consist of meeting the requirements of Section 208 of the "Standard Specifications", plan details, and as modified herein.

The Contractor will not be allowed to use sand backfill and instead shall use CM-6. The sewer trench shall be backfilled and compacted to the top of the Existing Pavement unless specified differently on the plans.

The granular material shall be compacted to not less than 93% of the standard laboratory density, unless otherwise directed by the Engineer.

The sewer trench detail in the plans that governs the maximum pay widths for selected granular backfill and pavement removal and replacement are based upon soil stability conditions generally encountered in the Quincy area. In the event that subsurface conditions are encountered that require the Contractor to use OSHA trench safety standards that exceed and are more extensive than the following OSHA cases:

A. The hydraulic bracing and shoring of Type A soils (without wales),

B. The hydraulic bracing and shoring with non-structural plywood sheeting to control minor raveling in Type B soils,

C. Encountering any Type C soils other than those within 2 feet of the bottom of the excavation, the Contractor will be allowed to request a change in either the maximum pay widths or request an extra to the contract for additional shoring or sheeting that do meet OSHA requirements.

The use of a trench shield(s) is required on this project but all OSHA requirements must be met and no allowance for adjusting pay widths will be made. The Contractor may NOT use an open cut method of installation. The Contractor will remain responsible for protecting and restoring all utilities and consumer services.

The Contractor shall inform the Engineer of the changed subsurface conditions, including but not limited to penetrometer readings, as a basis for increasing the allowable payment widths as specified in the plans. The City of Quincy may request that the Contractor provide certification by a Registered Professional Engineer in Illinois that the above listed trench safety methods will not meet OSHA requirements.

Basis of Payment: This work will be paid for at the contract unit price bid per cubic yard for TRENCH BACKFILL.

ITEM 3 - GEOTECHNICAL FABRIC FOR GROUND STABILIZATION

Description: This work shall be in accordance with Section 210 of the “Standard Specifications”.

ITEM 4 - TEMPORARY EROSION CONTROL SEEDING

ITEM 5 - INLET AND PIPE PROTECTION

Description: This work shall be in accordance with Section 280 of the “Standard Specifications”.

ITEM 6 - AGGREGATE BASE COURSE

Description: This work shall be in accordance with Section 351 of the “Standard Specifications”.

TEST ROLLING OF SUB GRADE AND BASE COURSE

The contractor will provide at his own expense a loaded truck to test roll the compacted earth sub grade, aggregate base, or milled pavement in the presence of the Engineer before any sub-base, base, or surface is placed. The truck shall be loaded as follows: 27,000 lbs (12,000 kg) on two axles and 45,000 lb (20,000 kg) on three axles, plus or minus ten per cent.

The truck shall make one pass over the entire length of each traffic lane to be constructed. Areas which show rutting, cracking or rolling will not be accepted. The Contractor will recompact and/or reconstruct the sections that fail and test role again for acceptance.

When bituminous surface courses or concrete pavement are to be placed over an aggregate base, the base shall be test rolled prior to placement of the surface course or pavement.

Method of Measurement: Test rolling will not be measured for payment.

ITEM 7 - AGGREGATE BASE REPAIR

Description: This work shall consist of the removal and disposal of unsuitable material, aggregate base, and subgrade and the furnishing, installing and compacting of new aggregate in soft areas requiring base repair identified by test rolling the streets scheduled for resurfacing in accordance with Sections 311 and 351 of the Standard Specifications and herein.

Aggregate shall meet IDOT gradation CA-6. Placing and compacting shall be per Type B. The Engineer shall determine the extent of the excavation required for the soft areas. The depth of the excavation shall be eight (8) inches below the final grade for the sub-base, unless further depth is required for stability.

All excavated material not needed on the work shall be disposed of according to Article 202.03 of the Standard Specifications.

Basis of Payment: This work shall be paid for at the contract unit price bid per ton for AGGREGATE BASE REPAIR which price shall include all materials, excavation, and disposal.

ITEM 8 - BITUMINOUS MATERIALS (PRIME COAT)

ITEM 9 - BITUMINOUS MATERIALS (TACK COAT)

ITEM 10 - HOT-MIX ASPHALT BINDER COURSE, IL- 9.5, N50

ITEM 11 - HOT-MIX ASPHALT SURFACE COURSE, MIX "C", N50

Description: This work shall consist of constructing hot-mix asphalt (HMA) binder and surface course on a prepared base in accordance with Section 406 of the "Standard Specifications", plan details, and as modified herein.

Test strips shall not be required.

Method of Measurement: Temporary ramps and surface removal for butt joints shall not be measured for payment.

~~**ITEM 12 - PROTECTIVE COAT**~~

~~Description: This work shall consist of applying a protective coat in accordance with Section 420 of the "Standard Specifications", plan details, and as modified herein.~~

~~The protective coat shall be applied to all portland cement concrete pavement and driveway pavement no matter the date of construction.~~

~~Pavement may be open to traffic prior to the application of the protective coat.~~

ITEM 13 - PORTLAND CEMENT CONCRETE DRIVEWAY PAVEMENT, 6 INCH

Description: This work shall consist of constructing Portland cement concrete driveway pavement in accordance with Section 423 of the "Standard Specifications", plan details, and as modified herein.

Materials: Reinforcement bars shall be according to Article 1006.10.

~~Protective coat shall be applied to the top slab according to Article 420.18.~~

ITEM 14 - PORTLAND CEMENT CONCRETE SIDEWALK

ITEM 15 - DETECTABLE WARNINGS

Description: This work shall consist of constructing portland concrete sidewalk, sidewalk accessibility ramps, and single concrete steps in accordance with Section 424 of the "Standard Specifications" and specified herein.

Materials: Detectable warnings shall be cast iron.

Maximum height of a step riser shall be 7 ½ inches.

~~Expansion joints shall be placed between the sidewalk and structures such as building foundations, building facades, and retaining walls.~~

Method of Measurement: This work will be measured for payment in place and area computed in square feet. The face of a step riser shall be included in the area measured.

ITEM 16 - PAVEMENT REMOVAL

ITEM 17 - HOT-MIX ASPHALT SURFACE REMOVAL, 1 1/2"

ITEM 18 - DRIVEWAY PAVEMENT REMOVAL

ITEM 19 - CURB REMOVAL

ITEM 20 - GUTTER REMOVAL

ITEM 21 - SIDEWALK REMOVAL

Description: This work shall be in accordance with Section 440 of the "Standard Specifications".

Combination curb and gutter to be removed on Job 144003 shall be measured for payment as "Gutter Removal". This shall include any the removal of any pavement within 12" of the concrete gutter removed at the Contractor's option.

Combination curb and gutter to be removed on Job 14706 shall be measured for payment as "Curb Removal".

When the curb is integral to the PCC sidewalk, curb removal shall be measured for payment along the face of the curb and an area equal to this measured length multiplied by 6 inches shall be deducted from the "Sidewalk Removal" area.

ITEM 12 - PAVEMENT PATCHING, TYPE II, 9 INCH

ITEM 22 - PAVEMENT PATCHING, TYPE IV, 6 INCH

ITEM 23 - PAVEMENT PATCHING, TYPE IV, 9 INCH

ITEM 24 - CLASS C PATCHES, TYPE IV, 12 INCH

Description: This work shall be in accordance with Section 442 of the "Standard Specifications".

Method of Measurement: The measured width of the patching for sanitary or storm sewer installation shall be according to the following:

Trench Depth / Protection	Pay Limits of Patching
5 ft. and less, without protection 5 ft. and less, with protection Greater than 5 ft.	5.0 ft 6.0 ft 6.0 ft
Manholes	10.0 ft by 10.0 ft

The measured width of the patching for water main installation shall be 5.0 ft.

ITEM 25 - INLETS, TYPE A, TYPE 3 FRAME AND GRATE

ITEM 26 - INLETS, TYPE A, TYPE 15 FRAME AND LID

Description: This work shall be in accordance with Sections 550 and 602 of the "Standard Specifications" and specified herein.

This work shall include furnishing and installing storm sewers (Class B) within 5 feet of the outside face of the manhole or inlet in order to provide a water-tight connection to the existing storm sewer system. The proposed pipe shall be of the same diameter of the existing sewer.

Method of Measurement: Connections to the existing storm sewers with 5 feet of the outside face of the manhole or inlet shall not be measured for payment.

ITEM 27 - MANHOLES TO BE ADJUSTED

ITEM 28 - MANHOLES TO BE ADJUSTED WITH NEW TYPE 1 FRAME, CLOSED LID

Description: This work shall be in accordance with Section 602 of the "Standard Specifications".

For sanitary sewer manholes, the lids shall have "SANITARY" cast in the top.

ITEM 29 - REMOVING MANHOLES
ITEM 30 - REMOVING INLETS
Description: This work shall be in accordance with Section 605 of the "Standard Specifications".

ITEM 31 - COMBINATION CONCRETE CURB AND GUTTER, TYPE B-6.12
ITEM 32 - COMBINATION CONCRETE CURB AND GUTTER, TYPE B-6.24
Description: This work shall be in accordance with Section 606 of the "Standard Specifications". Subbase granular material, when required, shall not be measured for payment.

ITEM 33 - OBJECT MARKER - TYPE 4

Description: This work shall be in accordance with Section 725 of the "Standard Specifications".

ITEM 34 - METAL POST - TYPE A

Description: This work shall be in accordance with Section 729 of the "Standard Specifications".

ITEM 35 - CONCRETE GUTTER, TYPE V-12.12

Description: This work shall be in accordance with Sections 311 and 606 of the "Standard Specifications", plan details, and as modified herein.

Protective coat will not be required.

Method of Measurement: The work will be measured for payment in feet in the flow line of the gutter, which measurement will include drainage castings incorporated in the gutters, including entrances, inlets, aprons, and outlets for gutters.

Subbase granular material, when required, shall not be measured for payment.

Basis of Payment: This work will be paid for at the contract unit price per foot for CONCRETE GUTTER, TYPE V-12.12.

The installation of this gutter, will require a transition from the Type V-12.12 to a Type B-6.## to match existing. The transition from the Type V-12.12 to the Type B-6.## will be paid for at the unit price bid per foot for CONCRETE GUTTER, TYPE V-12.12.

ITEM 36 - SEEDING, SPECIAL

Description: This work shall consist of seeding, fertilizing, mulching, and restoring all disturbed earth and landscaped surfaces in accordance with Section 250 and 251 of the "Standard Specifications" with the following additions and exceptions.

Where lawn areas are to be seeded, any fill material shall be thoroughly soaked with water so as to cause it to settle as completely as possible and minimize settlement after work is completed.

Where it is necessary in the construction of this project to remove or disturb existing structures, mailboxes, fences, landscaping mulch, edging, or other improvements, the Contractor shall promptly restore these items to as good a condition as that existed prior to being disturbed.

Fertilizer shall be applied at the rate of 270 pounds per acre at a proportion of 90 pounds of nitrogen, 90 pounds of phosphorus, and 90 pounds of potassium per acre. Fertilizer shall be applied by an approved mechanical spreader with the minimum being a walk-behind dispenser. Fertilizer shall be applied prior to the tilling operation. Dispensing of fertilizer with hand shovels will not be allowed.

All stones, boulders, debris and similar material larger than one (1) inch in diameter shall be removed from the application area prior to tilling. The seed bed shall be tilled to a minimum depth of three (3) inches with all tilling to be done by a mechanical tiller, the minimum being a walk-behind rotary garden tiller. After tilling, the seed bed shall be hand raked and all stones larger than 1/2 inch and all dirt clods larger than one (1) inch shall be removed.

Seeding operations for new construction (bare earth) shall be April 1 to June 1 or September 1 to December 15.

Seeding Mixture: The seeding mixture shall be 140 pounds of Kentucky Bluegrass per acre, 20 pounds of Creeping Red Fescue per acre and 200 pounds of Perennial Ryegrass per acre. The seed mixture shall be applied by an approved mechanical spreader with the minimum being a walk-behind dispenser. As an alternative, hydro-seeding will be allowed.

After seeding the seed bed shall be rolled by a hand-operated steel roller filled with water or hand-operated solid steel roller of sufficient weight to provide proper compaction. Applying the seed mixture by hand will not be allowed.

A cultipacker will not be required.

Mulch Method 1 according to article 251.03 of the "Standard Specifications" shall be the preferred method.

Method of Measurement: Seeding will be measured in square yards of the surface area seeded and restored.

Fertilizer and mulch shall not be measured for payment but shall be considered incidental to this pay item.

Basis of Payment: This work will be paid for at the contract unit price bid per square yard for SEEDING, SPECIAL.

ITEM 37 - TRENCH FRAME AND SOLID COVER - SMALL

ITEM 38 - TRENCH FRAME AND SOLID COVER – LARGE

Description: This work will consist of furnishing and installing a Neenah R-4990-CX or Neenah R-4990-EX Trench Frame with Type D Solid Cover or approved equal. The trench frame shall be installed in the proposed sidewalk area at the locations shown on the plans and shall exit through the proposed curb and gutter.

Incidental to the cost of the trench frame and solid cover shall be furnishing and installing the required 6x6-6 reinforcement fabric.

A deduction will not be made in the Portland Cement Concrete Sidewalk quantity through the trench frame area.

The solid cover provided shall have a checkered top pattern.

Basis of Payment: This work will be paid for at the contract unit price bid per foot for TRENCH FRAME AND SOLID COVER – SMALL or TRENCH FRAME AND SOLID COVER – LARGE.

ITEM 39 - SANITARY SEWER REMOVAL 8"

Description: This work shall consist of the removal and legal disposal of the existing sanitary sewer at the locations located on the plans. The work shall be performed in accordance with Articles 551 and 605 of the “Standard Specifications”.

Materials: Controlled low strength material shall be in accordance with Section 1019 of the “Standard Specifications”.

Existing sewer pipe that is to be left in place and abandoned shall be filled with controlled low-strength material or a very wet 5-bag mix concrete. The Contractor shall plug the downstream end of the pipe prior to filling using a method of his (her) choice.

Basis of Payment: All materials, labor, and equipment as required to perform the work as specified herein shall be paid for at the contract unit price per foot for SANITARY SEWER

REMOVAL of the diameter specified. The contract unit price shall include the plugging and abandoning existing sewers. Abandoned left in place sewer shall not be measured for payment.

ITEM 40 - SANITARY SERVICE REPLACEMENT

Description: This work shall include locating the existing sanitary sewer service locations, furnishing and replacing the existing service to the location indicated in the plans in accordance with Section 33 of the Standard Specifications for Water and Sewer Construction in Illinois, July 2009/6th edition and Section 550 of the "Standard Specifications".

Materials: The Contractor shall furnish PVC pipe in accordance with Section 30-4.04 with the following exception: PVC Pipe shall have an SDR rating of 26.

Connections to the new sanitary sewer main shall be with a new Tee of Wye connector with a minimum diameter of 6".

The Contractor shall not use more than two (2) elbows to connect the lateral service to the Main.

Backfill for the service shall be the same as the sanitary sewer main.

The contractor is responsible for making sure that all existing services are reconnected. Prior to construction, the contractor should dye test each lateral. In the event that the Contractor misses a connection, the Contractor shall go back and locate the service and connect it to the new sewer at the expense of the Contractor.

Method of Measurement: The work shall be measured per each for each sanitary sewer service installed and/or replaced in place, including all existing and proposed connections.

Basis of Payment: This work will be paid for at the contract unit price per each for SANITARY SEWER SERVICE REPLACEMENT price shall include locating the existing services, all materials, excavation and backfill, except excavation in rock.

Excavation in rock will be paid for separately in accordance with Article 502.13 of the "Standard Specifications".

If a lateral is to be connected directly into a manhole, all work associated in cutting a hole in the manhole wall, any collars, and fittings shall be included in the unit price for the pay item.

ITEM 41 - MANHOLES, SANITARY, 4'-DIAMETER, TYPE 1 FRAME, CLOSED LID

Description: This work shall consist of furnishing and installing sanitary manholes in accordance with Section 32 of the Standard Specifications for Water and Sewer Construction in Illinois, July 2009/6th edition and as specified herein.

Concrete masonry unit manholes and structures shall not be allowed.

Lids shall be heavy duty, self-sealing, and have "SANITARY" cast in the top.

The Contractor will not be allowed to use sand backfill and instead shall use CM-6. This backfill shall be incidental to this pay item for the manhole construction.

A concrete collar will be required around the ring and lid prior to the placement of the final lift of bituminous concrete for the proposed asphalt pavement. This concrete collar shall be allowed to cure for 48 hours.

Basis of Payment: This work will be paid for at the contract unit price per each for MANHOLES of the type and diameter specified, and with the type of frame and lid specified.

Article 32-13 of the Standard Specifications for Water and Sewer Construction in Illinois, July 2009/6th edition shall not apply.

ITEM 42 - SANITARY SEWER, TYPE 2 8"

Description: This work shall consist of furnishing and constructing sanitary sewer in accordance with Sections 30 to 33 of the Standard Specifications for Water and Sewer Construction in Illinois, July 2009/6th edition and Section 550 of the "Standard Specifications".

Materials: The Contractor shall furnish PVC pipe in accordance with Section 30-4.04 with the following exception: PVC Pipe shall have an SDR rating of 26.

Trench backfill is required where the inner edge of the trench is within 2 ft of the proposed edge of pavement, curb, gutter, curb and gutter, stabilized shoulder, or sidewalk.

The maximum pay width for sewers shall be in accordance with Article 550.04 of the "Standard Specifications". These widths are based upon soil stability conditions generally encountered. In the event that subsurface conditions are encountered that require the Contractor to use OSHA trench safety standards that exceed and are more extensive than the following OSHA cases:

A. The hydraulic bracing and shoring of Type A soils (without wales),

B. The hydraulic bracing and shoring with non-structural plywood sheeting to control minor raveling in Type B soils,

C. Encountering any Type C soils other than those within 2 feet of the bottom of the excavation, the Contractor will be allowed to request a change in either the maximum pay widths or request an extra to the contract for additional shoring or sheeting that do meet OSHA requirements.

The use of a trench shield(s) is required on this project but all OSHA requirements must be met and no allowance for adjusting pay widths will be made. The Contractor may NOT use an open cut method of installation. The Contractor will remain responsible for protecting and restoring all utilities and consumer services.

The Contractor shall inform the Engineer of the changed subsurface conditions, including but not limited to penetrometer readings, as a basis for increasing the allowable payment widths as specified in the plans. The City of Quincy may request that the Contractor provide certification by a Registered Professional Engineer in Illinois that the above listed trench safety methods will not meet OSHA requirements.

Method of Measurement: Sanitary sewers will be measured for payment in place in feet. No deductions shall be made for tees, fittings, or manholes. Where a change in sewer size is involved, it shall be assumed for measurement purposes that each sewer entering the manhole extends to the center of the manhole.

The type designation of the sanitary sewer shall be according to the following:

Fill Height	Type
3’ and less	1
Greater than 3’ not exceeding 10’	2
Greater than 10’ not exceeding 15’	3
Greater than 15’ not exceeding 20’	4
Greater than 20’ not exceeding 25’	5
Greater than 25’ not exceeding 30’	6
Greater than 35’	7

Excavation in rock will be measured for payment according to Article 502.12 of the “Standard Specifications”.

Basis of Payment: This work will be paid for at the contract unit price per foot for SANITARY SEWER, of the type and diameter specified.

ITEM 43 - VALVE BOX FRAMES TO BE ADJUSTED

ITEM 54 - CURB BOXES TO BE ADJUSTED

Description: This work shall consist of adjusting water valve boxes and curb (pave) boxes to the proposed grade elevation in accordance with Sections 561 and 602 of the Standard Specifications, plan details, and as modified herein.

The existing valve box casting and lid may be used unless damaged. The City of Quincy Department of Utilities will inspect each water casting and furnish at no cost a new one for either a damaged or a non-standard box and lid. Damage to the casting by the Contractor during adjustment shall be reason for replacement of the box at the Contractor's expense.

Basis of Payment: This work will be paid for at the contract unit price per each for VALVE BOX FRAMES TO BE ADJUSTED and CURB BOXES TO BE ADJUSTED which price shall include all materials, excavation and backfill, except excavation in rock.

Excavation in rock will be paid for separately in accordance with Article 502.13 of the Standard Specifications.

ITEM 44 - DOMESTIC METER VAULTS TO BE MOVED

Description: This work will involve the removal and relocation of service boxes and meter vaults on a consumer's water service line in accordance with Section 565 of the "Standard Specifications".

The work will involve the shutting off of water during the relocation. The Contractor will be allowed to use any of the following methods to shut-off the water service.

A. Shutting off the water main

B. Freezing the consumer line

C. Crimping of copper service lines

The Contractor shall not be allowed to close the old service line shut-off valve since in all cases it must be removed.

~~In the event the Contractor elects to shut-off the water main, work shall be scheduled such that as many relocations as possible can be done on the project during the shut-down times.~~

In all cases, the Contractor shall notify the affected residences and the Quincy Water Superintendent 24 hours before work is started and shall schedule his activities such that the water remains shut-off only between 8:00 a.m. to 6:00 p.m. In no case shall the water remain

off overnight. A 24-hour advance notification card system will be required for all residences losing water service.

The meter pit or pave box shall be set to the proposed elevation behind the new curb. ~~The Water Department will furnish the Contractor, at no cost, with a new service line curbstop valve for each water service box relocation. The Water Department will also furnish the Contractor, at no cost, with a new pave box, rod, water meter or water meter pit lid if in their judgment the existing one needs replacing. The Contractor will be furnished, at no cost, with an adjustable water meter pit that is to be installed at the new meter pit location.~~

The Contractor shall furnish at his cost all ~~miscellaneous~~ materials but may use salvaged materials if they are approved for use by the Quincy Water Department.

Basis of Payment: This work will be paid for at the contract unit price per each for DOMESTIC METER VAULTS TO BE MOVED and DOMESTIC VALVE BOXES TO BE MOVED which price shall include all materials, excavation and backfill, except excavation in rock.

Excavation in rock will be paid for separately in accordance with Article 502.13 of the Standard Specifications.

ITEM 45 - ADJUSTING WATER SERVICE LINES

Description: This work shall be in accordance with Section 563 of the "Standard Specifications".

ITEM 46 - C900 (DR-18) PVC WATERMAIN, 8"

ITEM 47 - WATER SERVICE LINE, 1"

ITEM 48 - 6" TAPPING SLEEVE

ITEM 49 - 12" X 8" TAPPING CROSS

ITEM 50 - 6" TAPPING VALVE

ITEM 51 - 8" TAPPING VALVE

ITEM 52 - 8" MJ X 6" PE REDUCER

Description: This work shall consist of furnishing and constructing pipe for water mains and service connections in accordance with Sections 40 to 46 of the Standard Specifications for Water and Sewer Construction in Illinois, July 2009/6th edition, Section 550 of the "Standard Specifications", the Illinois Administrative Code, Title 35 Subpart F Chapter II, Part 653 and specified herein.

Materials:

Pipe shall be PVC per ANSI/AWWA C900/905, pressure class DR18, with push-on resilient gasket joints per ASTM F477.

Fittings shall be cuctile iron with push-on (Tyton ©) joints and resilient gaskets per ANSI/AWWA C111.

Water service pipe shall be copper in accordance with Article 40-2.06A of the Standard Specifications for Water and Sewer Construction in Illinois, July 2009/6th edition.

All brass fittings and valves for service lines shall be manufactured in accordance with AWWA Standard C-800, latest revision. Any brass part of the fitting or valve in contact with potable water shall be made of a “No-Lead Brass”, defined for this specification as UNS Copper Alloy No. C89520 or C89833 in accordance with the chemical and mechanical requirements of ASTM B584 and AWWA C-800. This “No-Lead Brass” alloy shall not contain more than nine one hundredths of one percent (0.09% or less) total lead content by weight.

Any Brass part of the fitting or valve not in contact with potable water shall be made of 85-5-5-5 brass as defined for this specification as UNS Copper Alloy C83600 per ASTM B62, ASTM B584 and AWWA C-800.

All brass fittings and valves shall be certified by an ANSI accredited test lab per NSF/ANSI Standard 61, Drinking Water Components – Health Effects, Section 8 or NSF/ANSI Standard 372, Drinking Water System Components – Lead Content. Proof of certification is required.

Brass fittings and valves shall comply with the United States Of America Safe Drinking Water Act, and the U.S. Environmental Protection Agency. All brass fittings and valves shall have the manufacturers name or trademark permanently stamped or cast on it. Another marking identifying the “no lead” brass alloy, e.g., ‘NL’, shall be cast or permanently stamped on the fitting or valve.

Construction Requirements:

Pipe shall be installed with 48” minimum cover.

Maintain minimum horizontal and vertical clearances between proposed water main & water service lines and all existing sewers and existing sources of contamination as described in the Standard Specifications for Water and Sewer Construction in Illinois and the Illinois Administrative Code, Title 35 Subpart F Chapter II, Part 653.

The Contractor will furnish all pipe, fittings, concrete, asphalt, miscellaneous materials and rock for this improvement.

Trench backfill is required where the inner edge of the trench is within 2 ft of the proposed edge of pavement, curb, gutter, curb and gutter, stabilized shoulder, or sidewalk.

The water trench detail in the plans that governs the maximum pay widths for selected granular backfill and pavement removal and replacement are based upon soil stability conditions generally encountered in the Quincy area. In the event that subsurface conditions are encountered that require the Contractor to use OSHA trench safety standards that exceed and are more extensive than the following OSHA cases:

A. The hydraulic bracing and shoring of Type A soils (without wales),

B. The hydraulic bracing and shoring with non-structural plywood sheeting to control minor raveling in Type B soils,

C. Encountering any Type C soils other than those within 2 feet of the bottom of the excavation, the Contractor will be allowed to request a change in either the maximum pay widths or request an extra to the contract for additional shoring or sheeting that do meet OSHA requirements.

The use of a trench shield(s) is required on this project but all OSHA requirements must be met and no allowance for adjusting pay widths will be made. The Contractor may NOT use an open cut method of installation. The Contractor will remain responsible for protecting and restoring all utilities and consumer services.

The Contractor shall inform the Engineer of the changed subsurface conditions, including but not limited to penetrometer readings, as a basis for increasing the allowable payment widths as specified in the plans. The City of Quincy may request that the Contractor provide certification by a Registered Professional Engineer in Illinois that the above listed trench safety methods will not meet OSHA requirements.

Method of Measurement: Water pipe will be measured for payment in place in feet.

Valves, reducers, tapping sleeves and crosses, and bends for water mains shall be measeured for payment as each.

Individual fittings, corp stops, curb stops, and related appurtenances relating to water service lines shall not be measured for payment.

The required removal of existing water mains and water services shall not be measured for payment.

Excavation in rock will be measured for payment according to Article 502.12 of the “Standard Specifications”.

Basis of Payment: This work will be paid for at the contract unit price per foot for C900 (DR-18) PVC WATERMAIN and WATER SERVICE LINE of the diameter specified.

Valves, reducers, tapping sleeves and crosses, and bends for water mains will be paid for at the contract unit price per each for various fittings called for in the plans.

ITEM 53 - FIRE HYDRANTS TO BE REMOVED AND REPLACED

Description: This work shall consist of removing an existing fire hydrant and installing a new fire hydrant assembly complete (reducing tee, valve, pipe, elbows, thrust blocking, PCC ring, and related items) in accordance with Section 564 of the "Standard Specifications" and specified herein.

All hydrant materials necessary to complete the assembly shall be obtained from the Quincy Water Department at no cost. The city of Quincy Water Department will furnish, at no cost to the Contractor, a new fire hydrant. The Contractor shall be responsible for transporting all water main materials and the new fire hydrant to the job site. Salvageable items will remain the property of the Quincy Water Department and the Contractor shall place the old fire hydrant behind the curb and within the Right-of-Way for later pickup by the Water Department.

The Contractor shall be responsible for providing all equipment, labor, excavation, except excavation in rock, and necessary miscellaneous materials such as concrete, stone to drain the weep hole, and backfill, including a granular backfill material under sidewalk and pavement areas.

The Contractor shall also be required to provide labor for a maximum of one hour for shutting off the water main prior to removing the existing hydrant. Any additional time needed to shut off the main above the one hour time limit will be paid for as an extra to the contract. The Contractor shall also be required to provide labor for a maximum of one hour for turning the main back on after the hydrant has been replaced. Any additional time needed to turn on the main above the one hour time limit will be paid for as an extra to the contract.

The Contractor is also hereby notified that in no case shall water remain off overnight. Any plugging and thrust blocking on the fire hydrant feeder line, in the event that work cannot be finished within one day to allow the watermain to be turned back on, shall be the total responsibility of the Contractor.

The Contractor shall be responsible for notifying the Quincy Water Department Superintendent and the affected residences 24 hours in advance of water being shut-off. A card notification system will be allowed.

Basis of Payment: This work will be paid for at the contract unit price bid per each for FIRE HYDRANTS TO BE REMOVED AND REPLACED.

ITEM 55 - CURB BOX, ROD, AND LID

This work shall consist of furnishing and installing curb box, rod, and lid on a consumer water service line, either at a new location or on a replacement water service line.

Materials: Brass components conform to ASTM B62 and ASTM B584, UNS C83600-85-5-5-5 or ASTM B584, UNS C84400 – 81-3-7-9. Lid and Base made of Cast Iron per ASTM A48, Class 25. Upper section shall be made of steel pipe.

Curb stop boxes shall be extension type, with arch pattern bases. Upper sections shall be of steel and shall telescope a minimum of twelve (12) inches. Provisions shall be made to prevent the upper sections from turning or from pulling out of the base sections.

Curb stop boxes shall be coated, inside and outside, with coal tar enamel. Stationary rods and lids shall also be coated with coal tar enamel.

For a new water service line to a new building, the curb stop valve is to be shut off and the consumer through his licensed plumber will be responsible for extending the remaining water service line into the building.

For those locations where the new water service line replaces an existing line due to its age and/or condition or is being relocated either horizontally or vertically to accommodate the proposed street improvement, the work shall also consist of installing a compression coupling, to reconnect to the existing line. The old pave box and rod shall be removed from the old line. In all other cases, the Contractor will be allowed to use any of the following methods to shut-off the water service.

A. Shutting off the water main
B. Freezing the consumer line

C. Crimping of copper service lines

The Contractor shall not be allowed to close the old service line shut-off valve since in all cases it must be removed.

In all cases, the Contractor shall notify the affected residences and the Quincy Water Superintendent 24 hours before work is started and shall schedule his activities such that the water remains shut-off only between 8:00 a.m. to 6:00 p.m. In no case shall the water remain off overnight. A 24-hour advance notification card system will be required for all residences losing water service.

All work shall be done under the direction of the Quincy Water Department, who will have final approval of all work and materials necessary to complete the item. All backfilling and backfill materials under sidewalks, driveways, and pavements shall be in accordance with Section 550 of the Standard Specifications.

This work will be paid for at the contract unit price bid per each for CURB BOX, ROD, AND LID.

ITEM 56 & 57 - CONSTRUCTION LAYOUT

Description: The Contractor shall furnish and place construction layout stakes for this project. The City will provide adequate reference points to the centerline of survey and bench marks as shown in the plans and listed herein. Any additional control points set by the City will be identified in the field to the Contractor and all field notes will be kept in the office of the Resident Engineer.

The Contractor shall provide field forces, equipment, and material to set all additional stakes for this project, which are needed to establish offset stakes, reference points, and any other horizontal or vertical controls, including supplementary bench marks, necessary to secure a correct layout for the roadway portion of the work. Stakes for line and grade of pavement and/or curb shall be set at sufficient station intervals (not to exceed 25 ft) to assure substantial conformance to plan line and grade. The Contractor will not be required to set additional stakes to locate a utility line which is not included as a pay item in the contract nor to determine property lines between private properties.

The Contractor shall be responsible for having the finished work conform to the lines, grades, elevations, and dimensions called for in the plans. Any inspection or checking of the Contractor's layout by the Engineer and the acceptance of all or any part of it shall not relieve the Contractor of his/her responsibility to secure the proper dimensions, grades, and elevations of the several parts of the work. The Contractor shall exercise care in the preservation of stakes and bench marks and shall have them reset when any are damaged, lost, displaced, removed, or otherwise obliterated.

Responsibility of the City:

(a) Bench marks will be established along the project outside of construction lines not exceeding 1000 ft (300 m) intervals horizontally and 20 ft (6 m) vertically.

(b) The City will make random checks of the Contractor's staking to determine if the work is in conformance with the plans. Where the Contractor's work will tie into work that is being or will be done by others, checks will be made to determine if the work is in conformance with the proposed overall grade and horizontal alignment.

(c) The City will make all measurements and take all cross sections from which the various pay items will be measured.

(d) Where the Contractor, in setting construction stakes, discovers discrepancies, the City will check to determine their nature and make whatever revisions are necessary in the plans, including the recross sectioning of the area involved. Any additional restaking required by the Engineer will be the responsibility of the Contractor. The additional restaking done by the Contractor will be paid for according to Article 109.04 of the Standard Specifications.

(e) The City will accept responsibility for the accuracy of the initial control points as provided herein.

(f) It is not the responsibility of the City, except as provided herein, to check the correctness of the Contractor's stakes. Any apparent errors will be immediately called to the Contractor's attention and s(he) will be required to make the necessary correction before the stakes are used for construction purposes. The Contractor shall provide the Engineer a copy of any field notes, cut/fill sheets, and layout diagrams produced during the course of the project.

(g) Where the plan quantities for excavation are to be used as the final pay quantities, the City will make sufficient checks to determine if the work has been completed in conformance with the plan cross sections.

Responsibility of the Contractor:

(a) The Contractor will locate and reference the centerline of all roads and streets. The centerline of private entrances and short street intersection returns may not be located or referenced by the City. Locating and referencing the centerline of survey will consist of establishing and locating the control points of the centerline of surveys as PC's, PT's and as many POT's as are necessary to provide a line of sight.

(b) The Contractor shall establish from the given survey points and bench marks all the control points necessary to construct the individual project elements. (S)He shall provide the Engineer adequate control in close proximity to each individual element to allow adequate checking of construction operations. This includes, but is not limited to, line and grade stakes, line and grade nails in form work, and/or filed or etched marks in substantially completed construction work. It is the Contractor's responsibility to tie in centerline control points in order to preserve them during construction operations.

(c) At the completion of the grading operations, the Contractor shall set stakes at 50 ft station intervals along each profile grade line. These stakes will be used for final cross sectioning by the City.

(d) The Contractor shall locate the right-of-way points for the installation of right of-way markers. The Contractor shall set all line stakes for the construction of fences by the Contractor.

(e) All work shall be according to normally accepted self-checking surveying practices. Field notes shall be kept in standard survey field notebooks and those books shall become the property of the City at the completion of the project. All notes shall be neat, orderly, and in accepted form.

(f) The Contractor will set all stakes for utility adjustments along the right-of-way line by parties other than the Contractor.

Measurement and Payment. This work will be paid for at the contract unit price per each for CONSTRUCTION LAYOUT, at the location specified.

ITEM 58 - REMOVAL OF LIGHTING UNIT, NO SALVAGE

Description: This work shall be in accordance with Sections 842 of the "Standard Specifications", plan details, and as modified herein.

Pole foundations shall be removed to at least 6 inches below grade with removed material disposed of according to Article 202.03.

Method of Measurement: Removal of existing pole foundations shall not be measured for payment and will be included in the unit price for the removal of the lighting unit.

ITEM 61 - TEMPORARY ACCESS (ROAD)

This work includes all labor and materials required for constructing and maintaining temporary all-weather access to the existing Lincoln Hill Northwest from Woodlawn Road. This work will include furnishing and installing additional aggregate as construction activities alter the grade. This work shall be done in accordance with the details shown in the plans and/or directed by the Engineer.

The aggregate used for private and commercial entrances and roadways shall have a gradation of CA 6 aggregate conforming to Section 1004 of the Standard Specifications. A minimum thickness of 6 inches of aggregate shall be provided for temporary access at private and commercial entrances and roadways. A minimum width of 18' shall be provided.

When use of the temporary access is discontinued, the surface aggregate used shall be removed and disposed of in accordance with Article 202.03 or with the approval of the Engineer it may be utilized in permanent construction.

Method of Measurement: Temporary access will be measured for payment on an each basis. Each temporary access at entrances shall only be measured once.

Basis of Payment: This work will be paid for at the contract unit price per each for TEMPORARY ACCESS (ROAD).

PREVAILING WAGE

The successful Bidder and his subcontractors will be required to pay not less than the Prevailing Wage Rate for workmen engaged in work under this contract, with the provisions of an act of the General Assembly of the State of Illinois entitled "An Act Regulating the Wage of Laborers, Mechanics, and other workmen employed in any public works by the State, County, City or any Public Body, or any Political Subdivision or by anyone under contract for public works," by act approved July 11, 1957, as amended. Attached to and made part of these contract documents is the current prevailing wage rate decision.

It shall be the responsibility of the Contractor and his subcontractors to allow the City of Quincy, the Illinois City of Labor, and any authorized representative of any government agency involved in the funding of this project, access to and the right to examine all records, books, papers, payrolls, or documents related to this construction project. This right shall extend from the time of execution of the contract through the entire time period of the work, and ending three (3) years after the final pay estimate is disbursed.

The submission of weekly payroll certifications from both the prime contractor and all subcontractors will be required for this project. Submissions shall be made to the city of Quincy Resident Inspector/Engineer managing the project. Computer generated forms or other state and/or federal forms listing the appropriate information are acceptable for use as long as a signed certification statement is also on the form signed by a responsible company official. Submittals on a monthly basis broken down on a per week are acceptable if submitted within ten days of the end of a month.

Failure to submit the required information may, in addition to such other penalties as may be prescribed by contract or law, be grounds for being barred from bidding upon construction projects using city funds for a period of two years.

If the Illinois City of Labor revises during the term of this contract the prevailing rate of hourly wages to be paid by the City of Quincy in Adams County, the revised rate as provided by the City of Labor shall apply to this contract.

Adams County Prevailing Wage for July 2015

(See explanation of column headings at bottom of wages)

Trade Name	RG	TYP	C	Base	FRMAN	M-F>8	OSA	OSH	H/W	Pensn	Vac	Trng
ASBESTOS ABT-GEN		BLD		23.200	24.950	1.5	1.5	2.0	8.500	11.38	0.000	0.800
ASBESTOS ABT-MEC		BLD		30.360	31.360	1.5	1.5	2.0	7.450	3.000	0.000	0.000
BOILERMAKER		BLD		33.340	35.840	1.5	1.5	2.0	7.070	21.53	1.250	0.400
BRICK MASON		BLD		30.000	31.000	1.5	1.5	2.0	8.500	10.11	0.000	0.850
CARPENTER		BLD		30.200	32.450	1.5	1.5	2.0	8.000	15.65	0.000	0.520
CARPENTER		HWY		30.600	32.350	1.5	1.5	2.0	8.000	15.65	0.000	0.520
CEMENT MASON		BLD		26.550	28.050	1.5	1.5	2.0	7.200	12.35	0.000	0.600
CEMENT MASON		HWY		26.150	27.150	1.5	1.5	2.0	7.200	12.40	0.000	0.600
CERAMIC TILE FNSHER		BLD		29.160	0.000	1.5	1.5	2.0	8.500	7.560	0.000	0.000
ELECTRIC PWR EQMT OP		ALL		38.300	45.290	1.5	1.5	2.0	6.150	10.73	0.000	0.380
ELECTRIC PWR GRNDMAN		ALL		26.280	45.290	1.5	1.5	2.0	5.790	7.360	0.000	0.260
ELECTRIC PWR LINEMAN		ALL		42.540	45.290	1.5	1.5	2.0	6.280	11.92	0.000	0.430
ELECTRIC PWR TRK DRV		ALL		27.560	45.290	1.5	1.5	2.0	5.830	7.720	0.000	0.280
ELECTRICIAN		ALL		28.460	30.960	1.5	1.5	2.0	6.350	9.060	0.000	0.800
ELECTRICIAN		BLD		28.860	31.360	1.5	1.5	2.0	6.100	9.060	0.000	0.400
ELECTRONIC SYS TECH		BLD		28.250	30.250	1.5	1.5	2.0	6.350	10.54	0.000	0.400
ELEVATOR CONSTRUCTOR		BLD		41.690	46.900	2.0	2.0	2.0	13.57	14.21	3.340	0.600
GLAZIER		BLD		32.380	34.380	1.5	2.0	2.0	7.050	8.400	0.000	0.430
HT/FROST INSULATOR		BLD		38.060	39.060	1.5	1.5	2.0	8.700	11.46	0.000	0.550
IRON WORKER		ALL		25.250	27.500	1.5	1.5	2.0	8.010	12.38	0.000	0.460
LABORER		BLD		21.700	23.450	1.5	1.5	2.0	8.500	11.38	0.000	0.800
LABORER		HWY		26.060	27.060	1.5	1.5	2.0	8.500	12.75	0.000	0.800
LATHER		BLD		30.200	32.450	1.5	1.5	2.0	8.000	15.65	0.000	0.520
MACHINIST		BLD		45.350	47.850	1.5	1.5	2.0	7.260	8.950	1.850	0.000
MARBLE FINISHERS		BLD		29.160	0.000	1.5	1.5	2.0	8.500	7.560	0.000	0.000
MARBLE MASON		BLD		30.000	31.000	1.5	1.5	2.0	8.500	10.11	0.000	0.850
MILLWRIGHT		BLD		31.060	33.310	1.5	1.5	2.0	8.000	15.25	0.000	0.520
MILLWRIGHT		HWY		33.060	34.810	1.5	1.5	2.0	8.000	15.67	0.000	0.520
OPERATING ENGINEER		BLD	1	34.850	35.600	1.5	1.5	2.0	10.45	9.350	0.000	1.500
OPERATING ENGINEER		BLD	2	32.500	35.600	1.5	1.5	2.0	10.45	9.350	0.000	1.500
OPERATING ENGINEER		BLD	3	28.900	35.600	1.5	1.5	2.0	10.45	9.350	0.000	1.500
OPERATING ENGINEER		BLD	4	36.350	0.000	1.5	1.5	2.0	10.45	9.350	0.000	1.500
OPERATING ENGINEER		HWY	1	39.750	40.150	1.5	1.5	2.0	10.45	9.350	0.000	1.500
OPERATING ENGINEER		HWY	2	35.540	40.150	1.5	1.5	2.0	10.45	9.350	0.000	1.500
OPERATING ENGINEER		HWY	3	29.060	40.150	1.5	1.5	2.0	10.45	9.350	0.000	1.500
OPERATING ENGINEER		HWY	4	41.250	0.000	1.5	1.5	2.0	10.45	9.350	0.000	1.500
PAINTER		ALL		29.580	31.080	1.5	1.5	2.0	5.250	9.830	0.000	0.600
PAINTER OVER 30FT		ALL		30.580	32.080	1.5	1.5	2.0	5.250	9.830	0.000	0.600
PAINTER PWR EQMT		ALL		30.580	32.080	1.5	1.5	2.0	5.250	9.830	0.000	0.600
PILEDRIVER		BLD		31.200	33.450	1.5	1.5	2.0	8.000	15.65	0.000	0.520
PILEDRIVER		HWY		31.600	33.350	1.5	1.5	2.0	8.000	15.65	0.000	0.520
PIPEFITTER		ALL		37.650	41.420	1.5	1.5	2.0	6.000	12.95	0.000	1.150
PLASTERER		BLD		29.300	31.050	1.5	1.5	2.0	7.500	12.57	0.000	0.650
PLUMBER		ALL		37.650	41.420	1.5	1.5	2.0	6.000	12.95	0.000	1.150
ROOFER		BLD		28.580	30.010	1.5	1.5	2.0	8.450	7.220	0.000	0.250
SHEETMETAL WORKER		BLD		27.070	28.980	1.5	1.5	2.0	7.140	11.18	0.000	0.550
SPRINKLER FITTER		BLD		37.120	39.870	1.5	1.5	2.0	8.420	8.500	0.000	0.350
STONE MASON		BLD		30.000	31.000	1.5	1.5	2.0	8.500	10.11	0.000	0.850
~~SURVEY WORKER~~		->NOT IN EFFECT		ALL	24.220	25.220	1.5	1.5	2.0	8.000	12.19	0.000	0.800
TERRAZZO FINISHER		BLD		29.160	0.000	1.5	1.5	2.0	8.500	7.560	0.000	0.000
TERRAZZO MASON		BLD		30.660	30.230	1.5	1.5	2.0	8.500	9.070	0.000	0.000
TILE LAYER		BLD		29.100	31.350	1.5	1.5	2.0	7.350	12.50	0.000	0.420
TILE MASON		BLD		30.660	30.230	1.5	1.5	2.0	8.500	9.070	0.000	0.000
TRUCK DRIVER		ALL	1	34.220	37.870	1.5	1.5	2.0	11.40	5.640	0.000	0.250
TRUCK DRIVER		ALL	2	34.690	37.870	1.5	1.5	2.0	11.40	5.640	0.000	0.250
TRUCK DRIVER		ALL	3	34.950	37.870	1.5	1.5	2.0	11.40	5.640	0.000	0.250

TRUCK DRIVER	ALL	4	35.240	37.870	1.5	1.5	2.0	11.40	5.640	0.000	0.250
TRUCK DRIVER	ALL	5	36.170	37.870	1.5	1.5	2.0	11.40	5.640	0.000	0.250
TRUCK DRIVER	O&C	1	27.380	30.300	1.5	1.5	2.0	11.40	5.640	0.000	0.250
TRUCK DRIVER	O&C	2	27.750	30.300	1.5	1.5	2.0	11.40	5.640	0.000	0.250
TRUCK DRIVER	O&C	3	27.960	30.300	1.5	1.5	2.0	11.40	5.640	0.000	0.250
TRUCK DRIVER	O&C	4	28.190	30.300	1.5	1.5	2.0	11.40	5.640	0.000	0.250
TRUCK DRIVER	O&C	5	28.940	30.300	1.5	1.5	2.0	11.40	5.640	0.000	0.250
TUCKPOINTER	BLD		30.000	31.000	1.5	1.5	2.0	8.500	10.11	0.000	0.850

Legend: RG (Region)
TYP (Trade Type - All,Highway,Building,Floating,Oil & Chip,Rivers)
C (Class)
Base (Base Wage Rate)
FRMAN (Foreman Rate)
M-F>8 (OT required for any hour greater than 8 worked each day, Mon through Fri.
OSA (Overtime (OT) is required for every hour worked on Saturday)
OSH (Overtime is required for every hour worked on Sunday and Holidays)
H/W (Health & Welfare Insurance)
Pensn (Pension)
Vac (Vacation)
Trng (Training)

Explanations

The following list is considered as those days for which holiday rates of wages for work performed apply: New Years Day, Memorial Day, Fourth of July, Labor Day, Thanksgiving Day, Christmas Day and Veterans Day in some classifications/counties. Generally, any of these holidays which fall on a Sunday is celebrated on the following Monday. This then makes work performed on that Monday payable at the appropriate overtime rate for holiday pay. Common practice in a given local may alter certain days of celebration. If in doubt, please check with IDOL.

Oil and chip resealing (O&C) means the application of road oils and liquid asphalt to coat an existing road surface, followed by application of aggregate chips or gravel to coated surface, and subsequent rolling of material to seal the surface.

EXPLANATION OF CLASSES

ASBESTOS - GENERAL - removal of asbestos material/mold and hazardous materials from any place in a building, including mechanical systems where those mechanical systems are to be removed. This includes the removal of asbestos materials/mold and hazardous materials from ductwork or pipes in a building when the building is to be demolished at the time or at some close future date.

ASBESTOS - MECHANICAL - removal of asbestos material from mechanical systems, such as pipes, ducts, and boilers, where the mechanical systems are to remain.

CERAMIC TILE FINISHER, MARBLE FINISHER, TERRAZZO FINISHER

Assisting, helping or supporting the tile, marble and terrazzo mechanic by performing their historic and traditional work assignments required to complete the proper installation of the work covered by said crafts. The term "Ceramic" is used for naming the classification only and is in no way a limitation of the product handled. Ceramic takes into consideration most hard tiles.

ELECTRONIC SYSTEMS TECHNICIAN

Installation, service and maintenance of low-voltage systems which utilizes the transmission and/or transference of voice, sound, vision, or digital for commercial, education, security and entertainment

purposes for the following: TV monitoring and surveillance, background/foreground music, intercom and telephone interconnect, field programming, inventory control systems, microwave transmission, multi-media, multiplex, radio page, school, intercom and sound burglar alarms and low voltage master clock systems.

Excluded from this classification are energy management systems, life safety systems, supervisory controls and data acquisition systems not intrinsic with the above listed systems, fire alarm systems, nurse call systems and raceways exceeding fifteen feet in length

SURVEY WORKER - Operated survey equipment including data collectors, G.P.S. and robotic instruments, as well as conventional levels and transits.

TRUCK DRIVER - BUILDING, HEAVY AND HIGHWAY CONSTRUCTION

Class 1. Drivers on 2 axle trucks hauling less than 9 ton. Air compressor and welding machines and brooms, including those pulled by separate units, truck driver helpers, warehouse employees, mechanic helpers, greasers and tiremen, pickup trucks when hauling materials, tools, or workers to and from and on-the-job site, and fork lifts up to 6,000 lb. capacity.

Class 2. Two or three axle trucks hauling more than 9 ton but hauling less than 16 ton. A-frame winch trucks, hydrolift trucks, vactor trucks or similar equipment when used for transportation purposes. Fork lifts over 6,000 lb. capacity, winch trucks, four axle combination units, and ticket writers.

Class 3. Two, three or four axle trucks hauling 16 ton or more. Drivers on water pulls, articulated dump trucks, mechanics and working forepersons, and dispatchers. Five axle or more combination units.

Class 4. Low Boy and Oil Distributors.

Class 5. Drivers who require special protective clothing while employed on hazardous waste work.

TRUCK DRIVER - OIL AND CHIP RESEALING ONLY.

This shall encompass laborers, workers and mechanics who drive contractor or subcontractor owned, leased, or hired pickup, dump, service, or oil distributor trucks. The work includes transporting materials and equipment (including but not limited to, oils, aggregate supplies, parts, machinery and tools) to or from the job site; distributing oil or liquid asphalt and aggregate; stock piling material when in connection with the actual oil and chip contract. The Truck Driver (Oil & Chip Resealing) wage classification does not include supplier delivered materials.

OPERATING ENGINEERS - BUILDING

CLASS 1. Asphalt Screed Man; Aspco Concrete Spreaders; Asphalt Pavers; Asphalt Plant Engineer; Asphalt Rollers on Bituminous Concrete; Athey Loaders; Backfillers, Crane Type; Backhoes; Barber Green Loaders; Bulldozers; Cableways; Cherry Pickers; Clam Shells; C.M.I. & similar type autograde formless paver, autograde placer & finisher; Concrete Breakers; Concrete Pumps; Derricks; Derrick Boats; Draglines; Earth Auger or Boring Machines; Elevating Graders; Engineers on Dredges; Gravel Processing Machines; Head Equipment Greaser; High Lifts or Fork Lifts; Hoists with two or more drums or two or more load lines; Locomotives, All; Mechanics; Motor Graders or Auto Patrols; Operators or Leverman on Dredges; Operators, Power Boat;

Operators, Pug Mill (Asphalt Plants); Orange Peels; Overhead Cranes; Paving Mixers; Piledrivers; Pipe Wrapping and Painting Machines; Pushdozers, or Push Cats; Robotic Controlled Equipment in this Classification; Rock Crushers; Ross Carrier or Similar Machines; Rotomill; Scoops, Skimmer, two cu. yd. capacity and under; Scoops, All or Tournapull; Sheep-Foot Roller (Self Propelled); Shovels; Skid Steer; Skimmer Scoops; Temporary Concrete Plant Operators; Test Hole Drilling Machines; Tower Machines; Tower Mixers; Track Type End Loaders; Track Type Fork Lifts or High Lifts; Track Jacks and Tampers; Tractors, Sideboom; Trenching or Ditching Machine; Tunnelluggers; Vermeer Type Saws; Water Blaster Cutting Head; Wheel Type End Loaders; Winch Cat.

CLASS 2. Air Compressors (six to eight)*; Asphalt Boosters and Heaters; Asphalt Distributors; Asphalt Plant Fireman; Oiler on Two Paving Mixers When Used in Tandem; Boom or Winch Trucks; Bull Floats or Flexplanes; Concrete Finishing Machine; Concrete Saws, Self-Propelled; Concrete Spreading Machines; Conveyors (six to eight)*; Generators (six to eight)*; Gravel or Stone Spreader, Power Operated; Hoist (with One Drum and One Load Line); Light Plants (six to eight)*; Mechanical Heaters (six to eight)*; Mud Jacks; Post Hole Digger, Mechanical; Pug Mills when used for other than Asphalt operation; Robotic Controlled Equipment in this Classification; Road or Street Sweeper, Self Propelled; Rollers (except bituminous concrete); Seaman Tiller; Straw Machine; Vibratory Compactor; Water Blaster, Power Unit; Welding Machines (six to eight)*; Well Drill Machines.

CLASS 3. Air Compressors(one to five)*; Air Compressors, Track or Self-Propelled; Automatic Hoist; Building Elevators; Bulk Cement Batching Plants; Conveyors (one to five)*; Concrete Mixers (Except Plant, Paver, or Tower); Firemen; Generators (one to five)*; Greasers; Helper on Single Paving Mixer; Hoist, Automatic; Light Plants (one to five)*; Mechanic Helpers; Mechanical Heaters (one to five)*; Oilers; Power Form Graders; Power Sub-Graders; Robotic Controlled Equipment in this Classification; Scissors Hoist; Tractors without power attachments regardless of size or type; Truck Crane Oiler and Driver (1 man); Vibratory Hammer (power source); Water Pumps (one to five)*; Welding Machines (1/300 Amp. or over)*; Welding machines (one to five)*

CLASS 4. Lattice Boom Crawler Cranes; Lattice Boom Truck Cranes; Telescopic Truck-Mounted Cranes; Tower Cranes.

* Combinations of one to eight of any Air Compressors, Conveyors, Welding Machines, Water Pumps, Light Plants, or Generators shall be in batteries or within 400 feet and shall be paid as per the Classification Schedule contained in this Article.

OPERATING ENGINEERS - HIGHWAY

CLASS 1. Asphalt Screed Man; Asphco Concrete Spreaders; Asphalt Pavers; Asphalt Plant Engineer; Asphalt Rollers on Bituminous Concrete; Athey Loaders; Backhoes; Barber Green Loaders; Bulldozers; Cableways; Carry Deck Pickers; Cherry Pickers (Rough Terrain); C.M.I. & similar type-autograde formless paver, autograde placer & finisher; Concrete Breakers; Concrete Plant Operators; Concrete Pumps; Derricks; Derrick Boats; Dewatering Systems; Earth Auger or Boring Machines; Elevating Graders; Engineers on Dredges; Gravel Processing Machines; Grout Pump; Head Equipment Greaser; High Lifts or Fork Lifts; Hoists with two or more drums or two or more load lines; Hydro Jet or Hydro Laser; Locomotives, All; Mechanics; Motor Graders or Auto Patrols; Multi-Point Power Lifting Equipment; Operators or Leverman on Dredges; Operators, Power Boat; Operators, Pug Mill (Asphalt Plants); Overhead Cranes; Paving Mixers; Piledrivers; Pipe Wrapping and Painting

Machines; Push-dozers, or Push Cats; Robotic Controlled Equipment in this Classification; Rock Crushers; Ross Carrier or Similar Machines; Roto-Mill; Scoops, Skimmer, two cu. yd. capacity and under; Sheep-Foot Roller (Self Pro-pelled); Shovels; Skid Steer; Skimmer Scoops; Test Hole Drilling Machines; Tower Machines; Tower Mixers; Track Type End Loaders; Track Type Fork Lifts or High Lifts; Track Jacks and Tampers; Tractors, Side-boom; Trenching or Ditching Machine; Tunnelluggers; Vermeer-Type Saws; Wheel Type End Loaders; Winch Cat; Scoops, All or Tournapull.

CLASS 2. Air Compressors (six to eight)*; Articulated Dumps; Asphalt Boosters and Heaters; Asphalt Distributors; Asphalt Plant Fireman; Boom or Winch Trucks; Building Elevators; Bull Floats or Flexplanes; Concrete Finishing Machine; Concrete Saws, Self-Propelled; Concrete Spreading Machines; Conveyors (six to eight)*; Generators (six to eight)*; Gravel or Stone Spreader, Power Operated; Hoist, Automatic; Hoist with One Drum and One Load Line; Light Plants (six to eight)*; Mechanical Heaters (six to eight)*; Mud Jacks; Off Road Water Wagons; Oiler on Two Paving Mixers When Used in Tandem; Post Hole Digger, Mechanical; Robotic Controlled Equipment in This Classification; Road or Street Sweeper, Self-Propelled; Rollers (except bituminous concrete); Scissor Hoist; Sea-man Tiller; Straw Machine; Vibratory Compactor; Water Pumps (six to eight)*; Well Drill Machines.

CLASS 3. Air Compressors (one to five)*; Air Compressors, Track or Self-Propelled; Bulk Cement Batching Plants; Conveyors (one to five)*; Concrete Mixers (Except Plant, Paver, or Tower); Firemen; Generators (one to five)*; Greasers; Helper on Single Paving Mixer; Light Plants (one to five)*; Mechanic Helpers; Mechanical Heaters (one to five)*; Oilers; Power Form Graders; Power Sub-Graders; Pug Mills when used for other than Asphalt operation; Robotic Controlled Equipment in This Classification; Tractors without power attachments, regardless of size or type; Truck Crane Oiler and Driver (1 man); Vibratory Hammer (power source); Water Pumps (one to five)*; Welding Machines (one 300 Amp. or over)*; Welding Machines (one to five)*.

CLASS 4. Lattice Boom Crawler Crane; Lattice Boom Truck Crane; Telescopic Truck-Mounted Crane; Tower Crane.

*Combinations of one to eight of any Air Compressors, Conveyors, Welding Machines, Water Pumps, Light Plants or Generators shall be in batteries or within 400 feet and shall be paid as per the Classification Schedule contained in this Article.

Other Classifications of Work:

For definitions of classifications not otherwise set out, the Department generally has on file such definitions which are available. If a task to be performed is not subject to one of the classifications of pay set out, the Department will upon being contacted state which neighboring county has such a classification and provide such rate, such rate being deemed to exist by reference in this document. If no neighboring county rate applies to the task, the Department shall undertake a special determination, such special determination being then deemed to have existed under this determination. If a project requires these, or any classification not listed, please contact IDOL at 217-782-1710 for wage rates or clarifications.

LANDSCAPING

Landscaping work falls under the existing classifications for laborer,

operating engineer and truck driver. The work performed by landscape plantsman and landscape laborer is covered by the existing classification of laborer. The work performed by landscape operators (regardless of equipment used or its size) is covered by the classifications of operating engineer. The work performed by landscape truck drivers (regardless of size of truck driven) is covered by the classifications of truck driver.

State of Illinois
Department of Transportation
Bureau of Local Roads and Streets

SPECIAL PROVISION FOR INSURANCE

Effective: February 1, 2007
Revised: August 1, 2007

All references to Sections or Articles in this specification shall be construed to mean specific Section or Article of the Standard Specifications for Road and Bridge Construction, adopted by the Department of Transportation.

The Contractor shall name the following entities as additional insured under the Contractor's general liability insurance policy in accordance with Article 107.27:

City of Quincy, Illinois

The entities listed above and their officers, employees, and agents shall be indemnified and held harmless in accordance with Article 107.26.

State of Illinois
DEPARTMENT OF TRANSPORTATION
Bureau of Local Roads & Streets

SPECIAL PROVISION FOR FILLING HMA CORE HOLES WITH NON-SHRINK GROUT

Effective: January 1, 2008

All references to Sections and Articles in this Special Provision shall be construed to mean specific Sections and Articles in the Standard Specifications for Road and Bridge Construction adopted by the Department of Transportation.

Add the following after the first paragraph of Article 406.07(c) of the Standard Specifications:

> "Upon completion of coring for density testing, all free water shall be removed from the core holes prior to filling. All core holes shall be filled with a non-shrink grout from the Department's approved list, which shall be mixed in a separate container prior to placement in the hole. Only enough water to permit placement and consolidation by rodding shall be used, and the material shall be struck-off flush with the adjacent pavement."

COARSE AGGREGATE QUALITY (BDE)

Effective: July 1, 2015

Revise Article 1004.01(b) of the Standard Specifications to read:

"(b) Quality. The coarse aggregate shall be according to the quality standards listed in the following table.

COARSE AGGREGATE QUALITY				
QUALITY TEST	CLASS			
	A B		C	D
Na_2SO_4 Soundness 5 Cycle, ITP 104 [1/], % Loss max.	15 15		20	25 [2/]
Los Angeles Abrasion, ITP 96 [11/], % Loss max.	40 [3/]	40 [4/]	40 [5/]	45
Minus No. 200 (75 µm) Sieve Material, ITP 11	1.0 [6/]	--- 2.5	[7/]	---
Deleterious Materials [10/]				
Shale, % max.	1.0	2.0	4.0 [8/]	---
Clay Lumps, % max.	0.25	0.5	0.5 [8/]	---
Coal & Lignite, % max.	0.25	---	---	---
Soft & Unsound Fragments, % max.	4.0 6.0		8.0 [8/]	---
Other Deleterious, % max.	4.0 [9/]	2.0 2.0	[8/]	---
Total Deleterious, % max.	5.0	6.0	10.0 [8/]	---
Oil-Stained Aggregate [10/], % max	5.0	---	---	

1/ Does not apply to crushed concrete.

2/ For aggregate surface course and aggregate shoulders, the maximum percent loss shall be 30.

3/ For portland cement concrete, the maximum percent loss shall be 45.

4/ Does not apply to crushed slag or crushed steel slag.

5/ For hot-mix asphalt (HMA) binder mixtures, except when used as surface course, the maximum percent loss shall be 45.

6/ For crushed aggregate, if the material finer than the No. 200 (75 µm) sieve consists of the dust from fracture, essentially free from clay or silt, this percentage may be increased to 2.5.

7/ Does not apply to aggregates for HMA binder mixtures.

8/ Does not apply to Class A seal and cover coats.

9/ Includes deleterious chert. In gravel and crushed gravel aggregate, deleterious chert shall be the lightweight fraction separated in a 2.35 heavy media separation. In crushed stone aggregate, deleterious chert shall be the lightweight fraction separated in a 2.55 heavy media separation. Tests shall be run according to ITP 113.

10/ Test shall be run according to ITP 203.

11/ Does not apply to crushed slag.

All varieties of chert contained in gravel coarse aggregate for portland cement concrete, whether crushed or uncrushed, pure or impure, and irrespective of color, will be classed as chert and shall not be present in the total aggregate in excess of 25 percent by weight (mass).

Aggregates used in Class BS concrete (except when poured on subgrade), Class PS concrete, and Class PC concrete (bridge superstructure products only, excluding the approach slab) shall contain no more than two percent by weight (mass) of deleterious materials. Deleterious materials shall include substances whose disintegration is accompanied by an increase in volume which may cause spalling of the concrete."

80360

ERRATA FOR THE 2016 STANDARD SPECIFICATIONS (BDE)

Effective: April 1, 2016

Page 84 Article 204.02. In the seventh line of the first paragraph change "AASHTO T 99 (Method C)" to "Illinois Modified AASHTO T 99 (Method C)".

Page 90 Article 205.06. In the first sentence of the third paragraph change "AASHTO T 99 (Method C)" to "Illinois Modified AASHTO T 99 (Method C)".

Page 91 Article 205.06. In the first sentence of the fourth paragraph change "AASHTO T 99 (Method C)" to "Illinois Modified AASHTO T 99 (Method C)", and in the second sentence change "AASHTO T 224" to "Illinois Modified AASHTO T 99 (Annex A1)".

Page 91 Article 205.06. In the second line of the fifth paragraph change "AASHTO T 191" to "Illinois Modified AASHTO T 191".

Page 91 Article 205.06. In the sixth line of the eighth paragraph change "AASHTO T 99 (Method C)" to "Illinois Modified AASHTO T 99 (Method C)".

Page 148 Article 302.09. In the second sentence of the fifth paragraph change "AASHTO T 191" to "Illinois Modified AASHTO T 191", and in the third sentence change "AASHTO T 99" to "Illinois Modified AASHTO T 99".

Page 152 Article 310.09. In the second sentence of the second paragraph change "AASHTO T 191" to "Illinois Modified AASHTO T 191", and in the third sentence change "AASHTO T 99" to "Illinois Modified AASHTO T 99".

Page 155 Article 311.05(a). In the first sentence of the fifth paragraph change "AASHTO T 99 (Method C)" to "Illinois Modified AASHTO T 99 (Method C)", and in the second sentence change "AASHTO T 224" to "Illinois Modified AASHTO T 99 (Annex A1)".

Page 155 Article 311.05(a). In the second line of the sixth paragraph change "AASHTO T 191" to "Illinois Modified AASHTO T 191".

Page 163 Article 351.05(a). In the second sentence of the fifth paragraph change "AASHTO T 99 (Method C)" to "Illinois Modified AASHTO T 99 (Method C)", and in the third sentence change "AASHTO T 224" to "Illinois Modified AASHTO T 99 (Annex A1)".

Page 163 Article 351.05(a). In the second line of the sixth paragraph change "AASHTO T 191" to "Illinois Modified AASHTO T 191".

Page 169 Article 352.11. In the second sentence of the fourth paragraph change "AASHTO T 191" to "Illinois Modified AASHTO T 191", and in the third sentence change "AASHTO T 134 (Method B)" to "Illinois Modified AASHTO T 134 (Method B)".

Page 169 Article 352.12. In the first sentence of the first paragraph change "AASHTO T 22" to "Illinois Modified AASHTO T 22", and in the second sentence change "AASHTO T 134 (Method B)" to "Illinois Modified AASHTO T 134 (Method B)".

Page 196 Article 406.07(a). After the footnotes in Table 1 - Minimum Roller Requirements for HMA add the following:

"EQUIPMENT DEFINITION

V_s - Vibratory roller, static mode, minimum 125 lb/in. (2.2 kg/mm) of roller width. Maximum speed = 3 mph (5 km/h) or 264 ft/min (80 m/min). If the vibratory roller does not eliminate roller marks, its use shall be discontinued and a tandem roller, adequately ballasted to remove roller marks, shall be used.

V_D - Vibratory roller, dynamic mode, operated at a speed to produce not less than 10 impacts/ft (30 impacts/m).

P - Pneumatic-tired roller, max. speed 3 1/2 mph (5.5 km/h) or 308 ft/min (92 m/min). The pneumatic-tired roller shall have a minimum tire pressure of 80 psi (550 kPa) and shall be equipped with heat retention shields. The self-propelled pneumatic-tired roller shall develop a compression of not less than 300 lb (53 N) nor more than 500 lb (88 N) per in. (mm) of width of the tire tread in contact with the HMA surface.

T_B - Tandem roller for breakdown rolling, 8 to 12 tons (7 to 11 metric tons), 250 to 400 lb/in. (44 to 70 N/mm) of roller width, max. speed = 3 1/2 mph (5.5 km/h) or 308 ft/min (92 m/min).

T_F - Tandem roller for final rolling, 200 to 400 lb/in. (35 to 70 N/mm) of roller width with minimum roller width of 50 in. (1.25 m). Ballast shall be increased if roller marks are not eliminated. Ballast shall be decreased if the mat shoves or distorts.

3W- Three wheel roller, max. speed = 3 mph (5 km/h) or 264 ft/min (80 m/min), 300 to 400 lb/in. (53 to 70 N/mm) of roller width. The three-wheel roller shall weigh 10 to 12 tons (9 to 11 metric tons)."

Page 331 Article 505.04(p). Under Range of Clearance in the first table change "in. x 10^{-6}" to "in. x 10^{-3}".

Page 444 Article 542.03. In the Notes in Table IIIB add "CPP Corrugated Polypropylene (CPP) pipe with smooth interior".

Page 445 Article 542.03. In the fourth column in Table IIIB (metric) change the heading for Type 5 pipe from "CPE" to "CPP".

Page 445 Article 542.03. In the Notes in Table IIIB (metric) change "PE Polyethylene (PE) pipe with a smooth interior" to "CPP Corrugated Polypropylene (CPP) pipe with smooth interior".

Page 449 Article 542.04(f)(2). In the third line of the second paragraph change "AASHTO T 99 (Method C)" to "Illinois Modified AASHTO T 99 (Method C)".

Page 544 Article 639.03. In the first sentence of the first paragraph change "AASHTO Standard Specifications for Structural Supports for Highway Signs, Luminaires, Traffic Signals," to "AASHTO "LRFD Specifications for Structural Supports for Highway Signs, Luminaires, and Traffic Signals,"".

Page 546 Article 640.03. In the first sentence of the first paragraph change "AASHTO Standard Specifications for Structural Supports for Highway Signs, Luminaires, and Traffic Signals" to "AASHTO "LRFD Specifications for Structural Supports for Highway Signs, Luminaires, and Traffic Signals"".

Page 548 Article 641.03. In the first sentence of the first paragraph change "AASHTO Standard Specifications for Structural Supports for Highway Signs, Luminaire and Traffic Signals," to "AASHTO "LRFD Specifications for Structural Supports for Highway Signs, Luminaires, and Traffic Signals,"".

Page 621 Article 727.03. In the first sentence of the third paragraph change "AASHTO Standard Specifications for Structural Supports for Highway Signs, Luminaires and Traffic Signals" to "AASHTO "LRFD Specifications for Structural Supports for Highway Signs, Luminaires, and Traffic Signals"".

Page 629 Article 734.03(a). In the fourth line of the second paragraph change "AASHTO T 99 (Method C)" to "Illinois Modified AASHTO T 99 (Method C)".

Page 649 Article 801.02. In the first sentence of the first paragraph change "AASHTO's Standard Specifications for Structural Supports for Highway Signs, Luminaires, and Traffic Signals" to "AASHTO "LRFD Specifications for Structural Supports for Highway Signs, Luminaires, and Traffic Signals"".

Page 742 Article 1003.04(c). Under Gradation in the table change "(see Article 1003.02(c))" to "(see Article 1003.01(c))".

Page 755 Article 1004.03(b). Revise the third sentence of the first paragraph to read "For Class A (seal or cover coat), and other binder courses, the coarse aggregate shall be Class C quality or better.".

Page 809 Article 1020.04(e). In the third line of the first paragraph change "ITP SCC-3" to "ITP SCC-4".

Page 945 Article 1069.05. In the first sentence of the tenth paragraph change ""Standard Specifications for Structural Supports for Highway Signs, Luminaires, and Traffic Signals"" to "AASHTO "LRFD Specifications for Structural Supports for Highway Signs, Luminaires, and Traffic Signals"".

Page 961 Article 1070.04(b)(1). In the third sentence of the first paragraph change ""Standard Specifications of Structural Supports for Highway Signs, Luminaires and Traffic Signals" published by AASHTO" to "AASHTO "LRFD Specifications for Structural Supports for Highway Signs, Luminaires, and Traffic Signals"".

Page 989 Article 1077.01. In the second sentence of the first paragraph change "Standard Specifications for Structural Supports for Highway Signs, Luminaires, and Traffic Signals, as published by AASHTO" to "AASHTO "LRFD Specifications for Structural Supports for Highway Signs, Luminaires, and Traffic Signals"".

Page 1121 Article 1103.13(a). In the first line of the first paragraph change "Bridge Deck Approach Slabs." to "Bridge Deck and Approach Slabs.".

80364

HOT-MIX ASPHALT – TACK COAT (BDE)

Effective: November 1, 2016

Revise Article 1032.06(a) of the Standard Specifications to read:

"(a) Anionic Emulsified Asphalt. Anionic emulsified asphalts shall be according to AASHTO M 140. SS-1h emulsions used as a tack coat shall have the cement mixing test waived."

80376

WARM MIX ASPHALT (BDE)

Effective: January 1, 2012
Revised: April 1, 2016

Description. This work shall consist of designing, producing and constructing Warm Mix Asphalt (WMA) in lieu of Hot Mix Asphalt (HMA) at the Contractor's option. Work shall be according to Sections 406, 407, 408, 1030, and 1102 of the Standard Specifications, except as modified herein. In addition, any references to HMA in the Standard Specifications, or the special provisions shall be construed to include WMA.

WMA is an asphalt mixture which can be produced at temperatures lower than allowed for HMA utilizing approved WMA technologies. WMA technologies are defined as the use of additives or processes which allow a reduction in the temperatures at which HMA mixes are produced and placed. WMA is produced by the use of additives, a water foaming process, or combination of both. Additives include minerals, chemicals or organics incorporated into the asphalt binder stream in a dedicated delivery system. The process of foaming injects water into the asphalt binder stream, just prior to incorporation of the asphalt binder with the aggregate.

Approved WMA technologies may also be used in HMA provided all the requirements specified herein, with the exception of temperature, are met. However, asphalt mixtures produced at temperatures in excess of 275 °F (135 °C) will not be considered WMA when determining the grade reduction of the virgin asphalt binder grade.

Equipment.

Revise the first paragraph of Article 1102.01 of the Standard Specifications to read:

"**1102.01 Hot-Mix Asphalt Plant.** The hot-mix asphalt (HMA) plant shall be the batch-type, continuous-type, or dryer drum plant. The plants shall be evaluated for prequalification rating and approval to produce HMA according to the current Bureau of Materials and Physical Research Policy Memorandum, "Approval of Hot-Mix Asphalt Plants and Equipment". Once approved, the Contractor shall notify the Bureau of Materials and Physical Research to obtain approval of all plant modifications. The plants shall not be used to produce mixtures concurrently for more than one project or for private work unless permission is granted in writing by the Engineer. The plant units shall be so designed, coordinated and operated that they will function properly and produce HMA having uniform temperatures and compositions within the tolerances specified. The plant units shall meet the following requirements."

Add the following to Article 1102.01(a) of the Standard Specifications.

"(11) Equipment for Warm Mix Technologies.

a. Foaming. Metering equipment for foamed asphalt shall have an accuracy of ± 2 percent of the actual water metered. The foaming control system shall be electronically interfaced with the asphalt binder meter.

b. Additives. Additives shall be introduced into the plant according to the supplier's recommendations and shall be approved by the Engineer. The system for introducing the WMA additive shall be interlocked with the aggregate feed or weigh system to maintain correct proportions for all rates of production and batch sizes."

Mix Design Verification.

Add the following to Article 1030.04 of the Standard Specifications.

"(e) Warm Mix Technologies.

(1) Foaming. WMA mix design verification will not be required when foaming technology is used alone (without WMA additives). However, the foaming technology shall only be used on HMA designs previously approved by the Department.

(2) Additives. WMA mix designs utilizing additives shall be submitted to the Engineer for mix design verification."

Construction Requirements.

Revise the second paragraph of Article 406.06(b)(1) of the Standard Specifications to read:

"The HMA shall be delivered at a temperature of 250 to 350 °F (120 to 175 °C). WMA shall be delivered at a minimum temperature of 215 °F (102 °C)."

Basis of Payment.

This work will be paid at the contract unit price bid for the HMA pay items involved. Anti-strip will not be paid for separately, but shall be considered as included in the cost of the work.

80288

CITY OF QUINCY WATER SERVICE LOCATION DATA

LONCOLN HILL NORTHWEST

Quick Find Results Windo

Print | Close Results Window

Water Service Location

Account Numbe	90-5120	Location ID	27434
Service Location	300	Lincoln Hill N.W.	

Details

Main Size		Type of Main	
Tap Size	3/4"		
Tap Located In	Woodlawn		
Tap Location	13 feet 6 inches	West of East line of Curb	
	65 feet 6 inches	South of South line of 170 Woodlawn	
Service Size	1"	Type of Service	Copper
Pave Box Bran	McDonald		
Pave Box Locatio	8 feet 6 inches	West of West line of Curb	
	7 feet	South of North line of House	
Work Order #1	27527	Requisition #1	11131
Work Order #2		Requisition #2	
Date Installe	3-6 1951	Date Renewe	
Notes			

Latest Work and Materials

Latest Materials Used			
Date of Wor			
Employee Nam		Foreman Name	
Miscellaneous Notes	Replaced Pave Box and Rod 3-11-88 M.G. Address formerly 21 Lincoln Hill N.W.		

Quick Find Results Windo

Print | Close Results Window

Water Service Location

Account Numbe	90-5090	Location ID	27432
Service Location	301	Lincoln Hill N.W.	

Details

Main Size		Type of Main	
Tap Size	3/4"		
Tap Located In	Lincoln Hill		
Tap Location	9 feet 6 inches	South of North line of House	
	9 feet	West of East line of Curb	
Service Size	1"	Type of Service	Copper
Pave Box Bran	Ford		
Pave Box Locatio	1 feet 6 inches	East of East line of Curb	
	3 feet	South of North line of House	
Work Order #1	118379	Requisition #1	29029
Work Order #2		Requisition #2	
Date Installe	9-13 1954	Date Renewe	
Notes			

Latest Work and Materials

Latest Materials Used	One - Pave Box and Rod 3 pce.		
Date of Wor			
Employee Nam		Foreman Name	
Miscellaneous Notes	Replaced Pave Box and Rod. 9-23-2008 V.Davis		

Quick Find Results Windo

Print | Close Results Window

Water Service Location

Account Numbe	90-5150	Location ID	27436
Service Location	308	Lincoln Hill N.W.	

Details

Main Size		Type of Main	
Tap Size	3/4"		
Tap Located In	Lincoln Hill		
Tap Location	5 feet 6 inches	West of East line of Curb	
	3 feet	North of South line of House	
Service Size	1"	Type of Service	Copper
Pave Box Bran	M.I.W.		
Pave Box Locatio	14 feet	North of South line of House	
	1 feet 6 inches	West of West line of Curb	
Work Order #1		Requisition #1	
Work Order #2		Requisition #2	
Date Installe	2-18 1953	Date Renewe	
Notes			

Latest Work and Materials

Latest Materials Used			
Date of Wor			
Employee Nam		Foreman Name	
Miscellaneous Notes	Address formerly 22 Lincoln Hill NW		

Quick Find Results Windo

Print | Close Results Window

Water Service Location

Account Numbe	90-5060	Location ID	27430
Service Location	309	Lincoln Hill N.W.	

Details

Main Size		Type of Main	
Tap Size	3/4"		
Tap Located In	Lincoln Hill		
Tap Location	4 feet	West of East line of Curb	
	10 feet 6 inches	South of South line of House	
Service Size	1"	Type of Service	Copper
Pave Box Bran	McDonald		
Pave Box Locatio	10 feet 6 inches	South of South line of House	
	6 feet 6 inches	East of East line of Curb	
Work Order #1		Requisition #1	
Work Order #2		Requisition #2	
Date Installe	12-7 1965	Date Renewe	
Notes			

Latest Work and Materials

Latest Materials Used	11 feet of 1" Copper, One - 3/4" Corp. for 1" Copper, One - 1" Copper to Iron Curb Cock, One - pave box ndrod		
Date of Wor			
Employee Nam		Foreman Name	J.Smith
Miscellaneous Notes	Address formerly 40 Lincoln Hill NW		

Quick Find Results Windo

Print | Close Results Window

Water Service Location

Account Numbe	90-5030	Location ID	27428
Service Location	317	Lincoln Hill N.W.	

Details

Main Size		Type of Main	
Tap Size	3/4"		
Tap Located In	Lincoln Hill		
Tap Location	30 feet	North of North line of Driveway #39	
	5 feet	West of East line of Curb	
Service Size	1"	Type of Service	Copper
Pave Box Bran	M.I.W.		
Pave Box Locatio	29 feet 6 inches	North of North line of Driveway	
	1 feet	East of East line of Curb	
Work Order #1		Requisition #1	
Work Order #2		Requisition #2	
Date Installe	5-6 1952	Date Renewe	
Notes			

Latest Work and Materials

Latest Materials Used			
Date of Wor			
Employee Nam		Foreman Name	
Miscellaneous Notes	Adress formerly 39 Lincoln Hill NW		

Quick Find Results Windo

Print | Close Results Window

Water Service Location

Account Numbe	90-5180	Location ID	27438
Service Location	318	Lincoln Hill N.W.	

Details

Main Size		Type of Main	
Tap Size	3/4"		
Tap Located In	Lincoln Hill		
Tap Location	3 feet	South of South line of #23	
	5 feet 6 inches	West of East line of Curb	
Service Size	1"	Type of Service	Copper
Pave Box Bran	McDonald		
Pave Box Locatio	5 feet	West of West line of Curb	
	24 feet 8 inches	South of North line of House	
Work Order #1	197196	Requisition #1	33399
Work Order #2		Requisition #2	
Date Installe	5-19 1952	Date Renewe	
Notes	Address formerly 23 Lincoln Hill N.W.		

Latest Work and Materials

Latest Materials Used	1-1" copper-copper curb cock comp., 8"- 1" copper pipe, 1-1" copper-copper comp. coupling, 1- pave box and rod 3pce.		
Date of Wor	5-14 2015		
Employee Nam	Josh Stinnett	Foreman Name	Jason Schuette
Miscellaneous Notes	Replaced curb cock, pave box and rod. 5-14-2015 Jason S.		

Quick Find Results Windo

Print | Close Results Window

Water Service Location

Account Numbe	90-5210	Location ID	27440
Service Location	320	Lincoln Hill N.W.	

Details

Main Size		Type of Main	
Tap Size	3/4"		
Tap Located In	Lincoln Hill		
Tap Location	40 feet 6 inches	North of South line of #24	
	5 feet	West of East line of Curb	
Service Size	1"	Type of Service	Copper
Pave Box Bran	M.I.W.		
Pave Box Locatio	44 feet 6 inches	North of South line of #24	
	6 inches	West of West line of Curb	
Work Order #1		Requisition #1	
Work Order #2		Requisition #2	
Date Installe	5-2 1952	Date Renewe	
Notes			

Latest Work and Materials

Latest Materials Used			
Date of Wor			
Employee Nam		Foreman Name	
Miscellaneous Notes	Address formerly 24 Lincoln Hill NW		

Quick Find Results Windo

Print | Close Results Window

Water Service Location

Account Numbe	90-5450	Location ID	27456
Service Location	324	Lincoln Hill N.W.	

Details

Main Size	6"	Type of Main	
Tap Size	3/4"		
Tap Located In	Lincoln Hill		
Tap Location	17 feet 6 inches	North of South line of Curb	
	19 feet 6 inches	East of West line of House	
Service Size	1"	Type of Service	Copper
Pave Box Bran	M.I.W.		
Pave Box Locatio	6 inches	South of South line of Curb	
	30 feet	East of West line of House	
Work Order #1		Requisition #1	
Work Order #2		Requisition #2	
Date Installe	8-12 1957	Date Renewe	
Notes			

Latest Work and Materials

Latest Materials Used			
Date of Wor			
Employee Nam		Foreman Name	
Miscellaneous Notes	Address formerly 32 Lincoln Hill N.W.		

Quick Find Results Windo

Print | Close Results Window

Water Service Location

Account Numbe	90-5480	Location ID	27458
Service Location	326	Lincoln Hill N.W.	

Details

Main Size		Type of Main	
Tap Size	3/4"		
Tap Located In	Lincoln Hill		
Tap Location	4 feet	West of West line of 33	
	4 feet 6 inches	South of North line of Curb	
Service Size	1"	Type of Service	Copper
Pave Box Bran	McDonald		
Pave Box Locatio	27 feet 2 inches	East of West line of House	
	3 inches	South of South line of Curb	
Work Order #1	196354	Requisition #1	33353
Work Order #2		Requisition #2	
Date Installe	5-2 1952	Date Renewe	
Notes	Was 33 Lincoln Hill NW		

Latest Work and Materials

Latest Materials Used	1-1" copper-copper curb cock comp., 8"- 1" copper pipe, 1-1" copper-copper comp. coupling, 1- pave box and rod 3pce.		
Date of Wor	4-13 2015		
Employee Nam	Cray Scott	Foreman Name	Jason Schuette
Miscellaneous Notes	Replaced pave box and rod. 4-13-2015 Jason S.		

Quick Find Results Windo

Print | Close Results Window

Water Service Location

Account Numbe	90-5510	Location ID	27460
Service Location	328	Lincoln Hill N.W.	

Details

Main Size		Type of Main	
Tap Size	3/4"		
Tap Located In	Lincoln Hill		
Tap Location	29 feet 6 inches	East of East line of Driveway	
	5 feet	South of North line of Curb	
Service Size	1"	Type of Service	Copper
Pave Box Bran	M.I.W.		
Pave Box Locatio	29 feet 6 inches	East of East line of Driveway	
	1 feet	South of South line of Curb	
Work Order #1		Requisition #1	
Work Order #2		Requisition #2	
Date Installe	5-13 1952	Date Renewe	
Notes			

Latest Work and Materials

Latest Materials Used			
Date of Wor			
Employee Nam		Foreman Name	
Miscellaneous Notes			

Quick Find Results Windo | Print | Close Results Window

Water Service Location

Account Numbe	90-4970	Location ID	27424
Service Location	329	Lincoln Hill N.W.	

Details

Main Size		Type of Main	
Tap Size	3/4"		
Tap Located In	Lincoln Hill		
Tap Location	28 feet 6 inches	East of East line of Driveway	
	5 feet	South of North line of Curb	
Service Size	1"	Type of Service	Copper
Pave Box Bran	M.I.W.		
Pave Box Locatio	6 inches	North of North line of Curb	
	28 feet 6 inches	East of East line of Driveway	
Work Order #1		Requisition #1	
Work Order #2		Requisition #2	
Date Installe	5-13 1952	Date Renewe	
Notes			

Latest Work and Materials

Latest Materials Used			
Date of Wor			
Employee Nam		Foreman Name	
Miscellaneous Notes			

Quick Find Results Windo | Print | Close Results Window

Water Service Location

Account Numbe	90-5520	Location ID	27462
Service Location	332	Lincoln Hill N.W.	

Details

Main Size	8"	Type of Main	Trans
Tap Size	3/4"		
Tap Located In	S. 30th		
Tap Location	3 feet	West of West line of Curb	
	14 feet	North of South line of House	
Service Size	1"	Type of Service	Copper
Pave Box Bran	McDonald		
Pave Box Locatio	8 feet 6 inches	West of West line of Curb	
	14 feet	North of South line of House	
Work Order #1	22798	Requisition #1	5875
Work Order #2		Requisition #2	
Date Installe	9-17 1969	Date Renewe	
Notes			

Latest Work and Materials

Latest Materials Used	5 feet of 1" Copper, One - 3/4" corp. for 1" Copper, One - 1" Copper to Iron Curb Cock, One - pave box and Rod		
Date of Wor			
Employee Nam	Carter	Foreman Name	J. Smith
Miscellaneous Notes	Address formerly 35 Lincoln Hill N.W.		

CITY OF QUINCY WATER SERVICE LOCATION DATA

OHIO STREET

Quick Find Results Windo

Print | Close Results Window

Water Service Location

Account Numbe	21-6871	Location ID	3218
Service Location	600	Ohio	

Details

Main Size		Type of Main	
Tap Size	5/8"		
Tap Located In	S. 6th		
Tap Location	3 feet	North of North line of House	
	24 feet	East of West line of Street	
Service Size	3/4"	Type of Service	E.S.L.
Pave Box Bran	M.I.W.		
Pave Box Locatio	3 feet	North of North line of House	
	1 feet	East of East line of Curb	
Work Order #1		Requisition #1	
Work Order #2		Requisition #2	
Date Installe	7-27 1926	Date Renewe	
Notes			

Latest Work and Materials

Latest Materials Used			
Date of Wor			
Employee Nam		Foreman Name	
Miscellaneous Notes	Replaced Pave Box andRod 12-23-97 Davis		

Quick Find Results Windo

Print | Close Results Window

Water Service Location

Account Numbe	21-6841	Location ID	3216
Service Location	612	Ohio	

Details

Main Size	6"	Type of Main	C.I.
Tap Size	3/8"		
Tap Located In	Ohio		
Tap Location	5 feet	East of West line of House	
	24 feet	South of North line of Street	
Service Size	3/4"	Type of Service	E.S.L.
Pave Box Bran	M.I.W.		
Pave Box Locatio	5 feet	East of West line of House	
	3 feet 6 inches	South of South line of Curb	
Work Order #1		Requisition #1	
Work Order #2		Requisition #2	
Date Installe		Date Renewe	11-8 1922
Notes			

Latest Work and Materials

Latest Materials Used			
Date of Wor			
Employee Nam		Foreman Name	
Miscellaneous Notes			

Quick Find Results Windo

Print | Close Results Window

Water Service Location

Account Numbe	21-6811	Location ID	3214
Service Location	614	Ohio	

Details

Main Size	6"	Type of Main	C.I.
Tap Size	5/8"		
Tap Located In	Ohio		
Tap Location	8 feet 8 inches	West of East line of House	
	24 feet	South of North line of Street	
Service Size	3/4"	Type of Service	E.S.L.
Pave Box Bran	M.I.W.		
Pave Box Locatio	9 feet 6 inches	West of East line of House	
	4 feet 6 inches	South of South line of Curb	
Work Order #1		Requisition #1	
Work Order #2		Requisition #2	
Date Installe		Date Renewe	11-8 1922
Notes			

Latest Work and Materials

Latest Materials Used			
Date of Wor			
Employee Nam		Foreman Name	
Miscellaneous Notes			

Quick Find Results Windo

Print | Close Results Window

Water Service Location

Account Numbe	21-5101	Location ID	3128
Service Location	615	Ohio	

Details

Main Size	6"	Type of Main	C.I.
Tap Size	5/8"		
Tap Located In	Ohio		
Tap Location	5 feet 10 inches	West of West line of House	
	24 feet	South of North line of Street	
Service Size	3/4"	Type of Service	E.S.L.
Pave Box Bran	McDonald		
Pave Box Locatio	4 feet 8 inches	West of West line of House	
	4 feet	North of North line of Curb	
Work Order #1	22942	Requisition #1	23060
Work Order #2		Requisition #2	
Date Installe		Date Renewe	11-8 1922
Notes	in valve box		

Latest Work and Materials

Latest Materials Used	One - Pave Box and Rod 3 pce.		
Date of Wor			
Employee Nam		Foreman Name	
Miscellaneous Notes	Replaced Pave Box and Rod. 3-29-2001 V.Davis		

Quick Find Results Windo

Print | Close Results Window

Water Service Location

Account Numbe	21-5131	Location ID	3130
Service Location	619	Ohio	

Details

Main Size	6"	Type of Main	C.I.
Tap Size	5/8"		
Tap Located In	Ohio		
Tap Location	22 feet 6 inches	East of West line of House	
	24 feet 6 inches	South of North line of Street	
Service Size	3/4"	Type of Service	E.S.L.
Pave Box Bran	Jarecki		
Pave Box Locatio	2 feet 2 inches	East of East line of House	
	3 feet 6 inches	North of North line of Curb	
Work Order #1		Requisition #1	
Work Order #2		Requisition #2	
Date Installe		Date Renewe	10-3 1919
Notes			

Latest Work and Materials

Latest Materials Used			
Date of Wor			
Employee Nam		Foreman Name	
Miscellaneous Notes			

Quick Find Results Windo

Print | Close Results Window

Water Service Location

Account Numbe	21-6781	Location ID	3212
Service Location	620	Ohio	

Details

Main Size	6"	Type of Main	C.I.
Tap Size	5/8"		
Tap Located In	Ohio		
Tap Location	5 feet 6 inches	East of West line of House	
	24 feet	South of North line of Street	
Service Size	3/4"	Type of Service	E.S.L.
Pave Box Bran	McDonald		
Pave Box Locatio	4 feet 1 inch	East of West line of House	
	3 feet 7 inches	South of South line of Curb	
Work Order #1	26923	Requisition #1	09669
Work Order #2	136671	Requisition #2	29983
Date Installe	11-9 1922	Date Renewe	
Notes			

Latest Work and Materials

Latest Materials Used	1- 3/4xxs lead pak lead - copper comp.,7"- 3/4" copper pipe, 1- 3/4" curb cock, copper-copper comp. Conn. 1- 3/4" copper-copper comp. Coupling, 1-pave box and rod 3pce.		
Date of Wor	6-3 2010		
Employee Nam	Jason S.	Foreman Name	V. Davis
Miscellaneous Notes	Replaced curb cock, pave box and rod. 6-3-2010 V. Davis		

Quick Find Results Windo

Print | Close Results Window

Water Service Location

Account Numbe	21-5161	Location ID	3132
Service Location	621	Ohio	

Details

Main Size	6"	Type of Main	C.I.
Tap Size	5/8"		
Tap Located In	Ohio		
Tap Location	11 feet 6 inches	West of East line of House	
	24 feet	South of North line of Street	
Service Size	3/4"	Type of Service	E.S.L.
Pave Box Bran	McDonald		
Pave Box Locatio	10 feet 8 inches	West of East line of House	
	4 feet 2 inches	North of North line of Curb	
Work Order #1	166774	Requisition #1	31526
Work Order #2		Requisition #2	
Date Installe	11-8 1922	Date Renewe	
Notes			

Latest Work and Materials

Latest Materials Used	1- pave box and rod 3 pce.		
Date of Wor	10-22 2012		
Employee Nam	Tom Flaiz	Foreman Name	Jeff Schuette
Miscellaneous Notes	Replaced pave box and rod. 10-22-2012 Jeff Schuette		

Quick Find Results Windo

Print | Close Results Window

Water Service Location

Account Numbe	21-6751	Location ID	3210
Service Location	624	Ohio	

Details

Main Size	6"	Type of Main	C.I.
Tap Size	5/8"		
Tap Located In	Ohio		
Tap Location	8 feet	East of West line of House	
	24 feet	South of North line of Street	
Service Size	3/4"	Type of Service	E.S.L.
Pave Box Bran	Ford		
Pave Box Locatio	7 feet 6 inches	East of West line of House	
	4 feet	South of South line of Curb	
Work Order #1	121964	Requisition #1	29223
Work Order #2		Requisition #2	
Date Installe		Date Renewe	11-8 1922
Notes			

Latest Work and Materials

Latest Materials Used	One - Pave Box and Rod 3 pce.		
Date of Wor			
Employee Nam		Foreman Name	
Miscellaneous Notes	Replaced Pave Box and Rod. 2-23-2009 V.Davis		

Quick Find Results Windo

Print | Close Results Window

Water Service Location

Account Numbe	21-5221	Location ID	3134
Service Location	625	Ohio	

Details

Main Size	6"	Type of Main	C.I.
Tap Size	5/8"		
Tap Located In	Ohio		
Tap Location	4 feet	East of West line of House	
	24 feet	South of North line of Street	
Service Size	3/4"	Type of Service	E.S.L.
Pave Box Bran	McDonald		
Pave Box Locatio	2 feet 11 inches	North of North line of Curb	
	3 feet 4 inches	East of West Main line of House	
Work Order #1	173762	Requisition #1	32101
Work Order #2		Requisition #2	
Date Installe	12-5 1922	Date Renewe	
Notes			

Latest Work and Materials

Latest Materials Used	1- pave box and rod 3pce.		
Date of Wor	5-10 2013		
Employee Nam	Tom Flaiz	Foreman Name	V. Davis
Miscellaneous Notes	Replaced pave box and rod. 5-10-2013 V. Davis		

Quick Find Results Windo

Print | Close Results Window

Water Service Location

Account Numbe	21-6691	Location ID	3208
Service Location	628	Ohio	

Details

Main Size		Type of Main	
Tap Size	5/8"		
Tap Located In	Ohio		
Tap Location	4 feet	West of East line of House	
	9 feet 10 inches	South of North line of Curb	
Service Size	3/4"	Type of Service	E.S.L.
Pave Box Bran	McDonald		
Pave Box Locatio	3 feet	South of South line of Curb	
	4 feet 3 inches	West of East line of House	
Work Order #1	144472	Requisition #1	30393
Work Order #2		Requisition #2	
Date Installe		Date Renewe	11-10 1922
Notes			

Latest Work and Materials

Latest Materials Used	15 feet of 3/4" Copper, One - 3/4" Lead Pak.1- 3/4" curb cock copper - iron comp., 1- pave box and rod 3 pce.		
Date of Wor	11-9 2010		
Employee Nam	Matt H.	Foreman Name	V. Davis
Miscellaneous Notes	Note : 15 feet of 3/4" Copper Between Corp and Lead Pak. 4-25-2006 V.Davis/replace curb cock pave box and rod. 11-9-2010 V. Davis		

Quick Find Results Windo

Print | Close Results Window

Water Service Location

Account Numbe	21-5281	Location ID	3136
Service Location	629	Ohio	

Details

Main Size	6"	Type of Main	C.I.
Tap Size	5/8"		
Tap Located In	Ohio		
Tap Location	20 feet 10 inches	West of East line of House	
	24 feet	South of North line of Street	
Service Size	3/4"	Type of Service	E.S.L.
Pave Box Bran	Ford		
Pave Box Locatio	20 feet	West of East line of House	
	3 feet	North of North line of Curb	
Work Order #1	103191	Requisition #1	28269
Work Order #2		Requisition #2	
Date Installe		Date Renewe	11-10 1922
Notes			

Latest Work and Materials

Latest Materials Used	One - Pave Box and Rod 3 pce.
Date of Wor	
Employee Nam	Foreman Name
Miscellaneous Notes	Replaced Pave Box and Rod. 9-10-2007 V.Davis

Quick Find Results Windo

Print | Close Results Window

Water Service Location

Account Numbe	21-6661	Location ID	3206
Service Location	630	Ohio	

Details

Main Size	6"	Type of Main	C.I.
Tap Size	5/8"		
Tap Located In	Ohio		
Tap Location	6 feet	West of East line of House	
	9 feet 6 inches	South of North line of Curb	
Service Size	3/4"	Type of Service	E.S.L.
Pave Box Bran	Ford		
Pave Box Locatio	6 feet	West of East line of House	
	3 feet 6 inches	South of South line of Curb	
Work Order #1	84496	Requisition #1	27302
Work Order #2		Requisition #2	27267
Date Installe	7-29 1913	Date Renewe	
Notes			

Latest Work and Materials

Latest Materials Used	One - Pave Box and Rod 3 pce., Two- 3/4" Lead Paks., 11 feet of 3/4" Copper pipe in Street 4-26-2006 V.Davis.
Date of Wor	
Employee Nam	Foreman Name
Miscellaneous Notes	Replaced Pave Box and Rod. 5-24-2006 V.Davis

Quick Find Results Windo

Print | Close Results Window

Water Service Location

Account Numbe	21-5311	Location ID	3138
Service Location	633	Ohio	

Details

Main Size	6"	Type of Main	C.I.
Tap Size	5/8"		
Tap Located In	Ohio		
Tap Location	6 feet	West of West line of House	
	24 feet	South of North line of Street	
Service Size	3/4"	Type of Service	E.S.L.
Pave Box Bran	M.I.W.		
Pave Box Locatio	5 feet 8 inches	West of West line of House	
	4 feet	North of North line of Curb	
Work Order #1	93170	Requisition #1	20761
Work Order #2		Requisition #2	
Date Installe		Date Renewe	11-10 1922
Notes			

Latest Work and Materials

Latest Materials Used			
Date of Wor			
Employee Nam		Foreman Name	
Miscellaneous Notes	Replaced Pave Box and Rod 5-1-93 Davis		

Quick Find Results Windo

Print | Close Results Window

Water Service Location

Account Numbe	21-5341	Location ID	3140
Service Location	635	Ohio	

Details

Main Size	6"	Type of Main	C.I.
Tap Size	5/8"		
Tap Located In	Ohio		
Tap Location	12 feet	East of West line of House	
	24 feet	South of North line of Street	
Service Size	3/4"	Type of Service	E.S.L.
Pave Box Bran	M.I.W.		
Pave Box Locatio	11 feet 6 inches	East of West line of House	
	3 feet 6 inches	North of North line of Curb	
Work Order #1		Requisition #1	
Work Order #2		Requisition #2	
Date Installe	3-10 1915	Date Renewe	
Notes			

Latest Work and Materials

Latest Materials Used			
Date of Wor			
Employee Nam		Foreman Name	
Miscellaneous Notes			

Quick Find Results Windo | Print | Close Results Window

Water Service Location

Account Numbe	21-6631	Location ID	3204
Service Location	636	Ohio	

Details

Main Size	6"	Type of Main	C.I.
Tap Size	5/8"		
Tap Located In	Ohio		
Tap Location	9 feet 8 inches	South of North line of Curb	
	36 feet	West of East line of House	
Service Size	3/4"	Type of Service	E.S.L.
Pave Box Bran	M.I.W.		
Pave Box Locatio		On West line of House	
	3 feet 4 inches	South of South line of Curb	
Work Order #1		Requisition #1	27268
Work Order #2		Requisition #2	
Date Installe		Date Renewe	11-14 1922
Notes			

Latest Work and Materials

Latest Materials Used	2 - 3/4" Lead Paks, 13 feet of 3/4" Copper.
Date of Wor	
Employee Nam	Foreman Name
Miscellaneous Notes	2 - 3/4" Lead Paks and 13 feet of 3/4" Copper in Street. 4-26-2006 V.Davis

Quick Find Results Windo | Print | Close Results Window

Water Service Location

Account Numbe	21-6601	Location ID	3202
Service Location	638	Ohio	

Details

Main Size	6"	Type of Main	C.I.
Tap Size	5/8"		
Tap Located In	Ohio		
Tap Location	11 feet 6 inches	East of West line of House	
	24 feet	South of North line of Street	
Service Size	3/4"	Type of Service	E.S.L.
Pave Box Bran	M.I.W.		
Pave Box Locatio	11 feet 6 inches	East of West line of House	
	3 feet 8 inches	South of South line of Curb	
Work Order #1		Requisition #1	
Work Order #2		Requisition #2	
Date Installe	11-24 1914	Date Renewe	
Notes			

Latest Work and Materials

Latest Materials Used	
Date of Wor	
Employee Nam	Foreman Name
Miscellaneous Notes	Replaced Pave Box and Rod 11-6-96

Quick Find Results Windo | Print | Close Results Window

Water Service Location

(Unit 1)

Account Numbe	21-5371	Location ID	3142
Service Location	639	Ohio	

Details

Main Size	6"	Type of Main	C.I.
Tap Size	5/8"		
Tap Located In	Ohio		
Tap Location	3 feet 6 inches	West of East line of House	
	24 feet	South of North line of Street	
Service Size	3/4"	Type of Service	E.S.L.
Pave Box Bran	McDonald (West)		
Pave Box Locatio	6 feet	West of East line of House	
	4 feet 9 inches	North of North line of Curb	
Work Order #1	183733	Requisition #1	32649
Work Order #2		Requisition #2	
Date Installe		Date Renewe	11-15 1922
Notes	Branched at curb for 639 Ohio Unit A		

Latest Work and Materials

Latest Materials Used	1- 3/4" lead pak lead-copper cocmp., 1'- 3/4" copper pipe, 8 inches- 3/4" copper pipe, 1- 3/4" copper-iron curb cock comp., 1- 3/4"x3/4"x3/4" comp. Tee, 1- pave box and rod 3pce.		
Date of Wor	3-18 2014		
Employee Nam	Cray Scott	Foreman Name	V. Davis
Miscellaneous Notes	Repalced curb cock, pave box and rod. Branched service for 639 Ohio Unit A 3-18-2014 V. Davis		

Quick Find Results Windo | Print | Close Results Window

Water Service Location

(Unit 2)

Account Numbe		Location ID	37094
Service Location	639	Ohio Unit A	

Details

Main Size		Type of Main	
Tap Size			
Tap Located In	For corp. see card for 639 Ohio		
Tap Location			
Service Size	3/4"	Type of Service	Copper
Pave Box Bran	McDonald (East)		
Pave Box Locatio	4 feet 3 inches	West of East line of House	
	4 feet 9 inches	North of North line of Curb	
Work Order #1	183726	Requisition #1	32649
Work Order #2		Requisition #2	
Date Installe	3-18 2014	Date Renewe	
Notes	Branched at curb from 639 Ohio. EAST BOX		

Latest Work and Materials

Latest Materials Used	1' 4"- 3/4" copper pipe, 1- 3/4" copper-iron curb cock comp., 1- pave box and rod 3pce.		
Date of Wor			
Employee Nam	Cray Scott	Foreman Name	V. Davis
Miscellaneous Notes			

Quick Find Results Windo

Print | Close Results Window

Water Service Location

Account Numbe	21-6571	Location ID	3200
Service Location	642	Ohio	

Details

Main Size	6"	Type of Main	C.I.
Tap Size	5/8"		
Tap Located In	Ohio		
Tap Location	5 feet 6 inches	East of West line of House	
	24 feet	South of North line of Street	
Service Size	3/4"	Type of Service	E.S.L.
Pave Box Bran	M.I.W.		
Pave Box Locatio	6 feet 10 inches	East of West line of House	
	4 feet 3 inches	South of South line of Curb	
Work Order #1		Requisition #1	
Work Order #2		Requisition #2	
Date Installe		Date Renewe	11-14 1922
Notes			

Latest Work and Materials

Latest Materials Used			
Date of Wor			
Employee Nam		Foreman Name	
Miscellaneous Notes			

Quick Find Results Windo

Print | Close Results Window

Water Service Location

Account Numbe	21-6481	Location ID	3198
Service Location	648	Ohio	

Details

Main Size	6"	Type of Main	C.I.
Tap Size	5/8"		
Tap Located In	Ohio		
Tap Location	24 feet	South of North line of Street	
	11 feet 2 inches	West of East line of House	
Service Size	3/4"	Type of Service	E.S.L.
Pave Box Bran	Ford		
Pave Box Locatio	12 feet	West of East line of House	
	3 feet 7 inches	South of South line of Curb	
Work Order #1	121983	Requisition #1	29224
Work Order #2		Requisition #2	
Date Installe		Date Renewe	11-15 1922
Notes			

Latest Work and Materials

Latest Materials Used	One - Pave Box and Rod 3 pce.		
Date of Wor			
Employee Nam		Foreman Name	
Miscellaneous Notes	Replaced Pave Box and Rod. 2-23-2009 V.Davis		

Quick Find Results Windo

Print | Close Results Window

Water Service Location

Account Numbe	21-5401	Location ID	3144
Service Location	649	Ohio	

Details

Main Size	6"	Type of Main	C.I.
Tap Size	3/4"		
Tap Located In	Ohio		
Tap Location	17 feet	West of East line of House	
	24 feet	South of North line of Street	
Service Size	1"	Type of Service	E.S.L.
Pave Box Bran	M.I.W.		
Pave Box Locatio	16 feet 8 inches	West of East line of Bldg.	
	3 feet 9 inches	North of North line of Curb	
Work Order #1	190406	Requisition #1	32904
Work Order #2		Requisition #2	
Date Installe	7-22 1915	Date Renewe	
Notes	Branched at curb for future use/No pave box. Curb cock is 17'6" WE L of Bldg./4'6" NN L of Curb		

Latest Work and Materials

Latest Materials Used	1- pave box and rod 3pce.		
Date of Wor	9-24 2014		
Employee Nam	Cray Scott	Foreman Name	V. Davis
Miscellaneous Notes	Replaced pave box and rod. 9-24-2014 V. Davis		

Quick Find Results Windo

Print | Close Results Window

Water Service Location

Account Numbe	21-6211	Location ID	3182
Service Location	700	Ohio	

Details

Main Size		Type of Main	
Tap Size	5/8"		
Tap Located In	Ohio		
Tap Location	18 feet 8 inches	East of West line of Bldg	
	24 feet	North of South line of Street	
Service Size	3/4"	Type of Service	E.S.L.
Pave Box Bran	M.I.W.		
Pave Box Locatio	18 feet 4 inches	East of West line of House	
	3 feet 11 inches	South of South line of Curb	
Work Order #1		Requisition #1	
Work Order #2		Requisition #2	
Date Installe		Date Renewe	11-15 1922
Notes			

Latest Work and Materials

Latest Materials Used			
Date of Wor			
Employee Nam		Foreman Name	
Miscellaneous Notes			

Quick Find Results Windo

Print | Close Results Window

Water Service Location

Account Numbe	21-6181	Location ID	3180
Service Location	704	Ohio	

Details

Main Size		Type of Main	
Tap Size	5/8"		
Tap Located In	Ohio		
Tap Location	30 feet	East of West line of House	
	24feet	South of North line of Street	
Service Size	3/4"	Type of Service	E.S.L.
Pave Box Bran	McDonald		
Pave Box Locatio	29 feet 4 inches	East of West line of House	
	3 feet 9 inches	South of South line of Curb	
Work Order #1	86133	Requisition #1	27339
Work Order #2		Requisition #2	
Date Installe		Date Renewe	11-16 1922
Notes			

Latest Work and Materials

Latest Materials Used	One - Pave Box and Rod 3 pce.		
Date of Wor			
Employee Nam		Foreman Name	
Miscellaneous Notes	Replaced Pave Box and Rod. 6-15-2006 V.Davis		

Quick Find Results Windo

Print | Close Results Window

Water Service Location

Account Numbe	21-6151	Location ID	3178
Service Location	708	Ohio	

Details

Main Size		Type of Main	
Tap Size	5/8"		
Tap Located In	Ohio		
Tap Location	18 feet	West of East line of House	
	24 feet	South of North line of Street	
Service Size	3/4"	Type of Service	E.S.L.
Pave Box Bran	M.I.W.		
Pave Box Locatio	18 feet 8 inches	West of East line of House	
	4 feet 4 inches	South of South line of Curb	
Work Order #1		Requisition #1	
Work Order #2		Requisition #2	
Date Installe		Date Renewe	11-16 1922
Notes			

Latest Work and Materials

Latest Materials Used			
Date of Wor			
Employee Nam		Foreman Name	
Miscellaneous Notes			

Quick Find Results Windo

Print | Close Results Window

Water Service Location

Account Numbe	21-5521	Location ID	3146
Service Location	711	Ohio	

Details

Main Size		Type of Main	
Tap Size	5/8"		
Tap Located In	Ohio		
Tap Location	13 feet	West of West line of House	
	23 feet 2 inches	South of North line of Street	
Service Size	3/4"	Type of Service	E.S.L.
Pave Box Bran	Ford		
Pave Box Locatio	13 feet 2 inches	West of West line of House	
	3 feet 10 inches	North of North line of Curb	
Work Order #1		Requisition #1	24366
Work Order #2		Requisition #2	
Date Installe		Date Renewe	11-17 1922
Notes			

Latest Work and Materials

Latest Materials Used	One - Pave Box and Rod 3 pce.
Date of Wor	
Employee Nam	Foreman Name
Miscellaneous Notes	Replaced Pave Box and Rod. 8-1-2002 V.Davis

Quick Find Results Windo

Print | Close Results Window

Water Service Location

Account Numbe	21-6121	Location ID	3176
Service Location	712	Ohio	

Details

Main Size	6"	Type of Main	C.I.
Tap Size	5/8"		
Tap Located In	Ohio		
Tap Location	7 feet 6 inches	East of East line of House	
	24 feet	South of North line of Street	
Service Size	3/4"	Type of Service	E.S.L.
Pave Box Bran	Ford		
Pave Box Locatio	3 feet 6 inches	South of South line of Curb	
	5 feet	East of East line of House	
Work Order #1	109763	Requisition #1	28625
Work Order #2		Requisition #2	
Date Installe		Date Renewe	11-18 1922
Notes			

Latest Work and Materials

Latest Materials Used	One - 3/4" Copper to Copper Curb Cock Comp., One - Pave Box and Rod 3 pce.
Date of Wor	
Employee Nam	Foreman Name
Miscellaneous Notes	Replaced Curb Cock and Pave Box and Rod. 2-5-2008 V.Davis

Quick Find Results Windo

Print | Close Results Window

Water Service Location

Account Numbe	21-5551	Location ID	3148
Service Location	715	Ohio	

Details

Main Size	6"	Type of Main	C.I.
Tap Size	5/8"		
Tap Located In	Ohio		
Tap Location	22 feet	South of North line of Street	
	15 feet	West of East line of House	
Service Size	3/4"	Type of Service	E.S.L.
Pave Box Bran	M.I.W.		
Pave Box Locatio	14 feet 6 inches	West of East line of House	
	4 feet	North of North line of Curb	
Work Order #1		Requisition #1	
Work Order #2		Requisition #2	
Date Installe		Date Renewe	
Notes			

Latest Work and Materials

Latest Materials Used			
Date of Wor			
Employee Nam		Foreman Name	
Miscellaneous Notes			

Quick Find Results Windo

Print | Close Results Window

Water Service Location

Account Numbe	21-6091	Location ID	3174
Service Location	716	Ohio	

Details

Main Size	6"	Type of Main	C.I.
Tap Size	5/8"		
Tap Located In	Ohio		
Tap Location	13 feet 6 inches	West of East line of House	
	23 feet 6 inches	South of North line of Street	
Service Size	3/4"	Type of Service	E.S.L.
Pave Box Bran	McDonald		
Pave Box Locatio	13 feet	West of East line of House	
	4 feet	South of South line of Curb	
Work Order #1		Requisition #1	15491
Work Order #2		Requisition #2	
Date Installe	9-15	1920	Date Renewe
Notes			

Latest Work and Materials

Latest Materials Used			
Date of Wor			
Employee Nam		Foreman Name	
Miscellaneous Notes	Replaced Curb Cock, Pave Box and Rod 6-3-92 M.G.		

Quick Find Results Windo

Print | Close Results Window

Water Service Location

Account Numbe	21-5581	Location ID	3150
Service Location	719	Ohio	

Details

Main Size	6"	Type of Main	C.I.
Tap Size	5/8"		
Tap Located In	Ohio		
Tap Location	5 feet	West of West line of House	
	23 feet	South of North line of Street	
Service Size	3/4"	Type of Service	E.S.L.
Pave Box Bran	M.I.W.		
Pave Box Locatio	4 feet 6 inches	West of West line of House	
	4 feet	North of North line of Curb	
Work Order #1		Requisition #1	
Work Order #2		Requisition #2	
Date Installe	11-17 1922	Date Renewe	
Notes			

Latest Work and Materials

Latest Materials Used			
Date of Wor			
Employee Nam		Foreman Name	
Miscellaneous Notes			

Quick Find Results Windo

Print | Close Results Window

Water Service Location

Account Numbe	21-6061	Location ID	3172
Service Location	720	Ohio	

Details

Main Size	6"	Type of Main	C.I.
Tap Size	5/8"		
Tap Located In	Ohio		
Tap Location	20 feet 4 inches	East of East line of House	
	24 feet	South of North line of Street	
Service Size	3/4"	Type of Service	E.S.L.
Pave Box Bran	McDonald		
Pave Box Locatio	18 feet 8 inches	East of East line of House	
	4 feet	South of South line of Curb	
Work Order #1	17316	Requisition #1	11898
Work Order #2		Requisition #2	
Date Installe	11-18 1922	Date Renewe	
Notes			

Latest Work and Materials

Latest Materials Used			
Date of Wor			
Employee Nam		Foreman Name	
Miscellaneous Notes	Replaced Curb Cock, Pave Box and Rod 10-24-88 M.G.		

CITY OF QUINCY PROJECT NO.	COUNTY	TOTAL SHEETS	SHEET NO.
MR-599B	ADAMS	44	1

INDEX OF SHEETS

SEE SHEET NO. 2

HIGHWAY STANDARDS

SEE SHEET NO. 2

PLANS FOR THE PROPOSED

2016 CAPITAL IMPROVEMENTS

WARDS 4 AND 7

QUINCY, ILLINOIS
CAPITAL IMPROVEMENT FUNDS

Addendum #1 – 9/7/2016
Revised sheets:
1
3–5
10
11
17–27
31
41
44

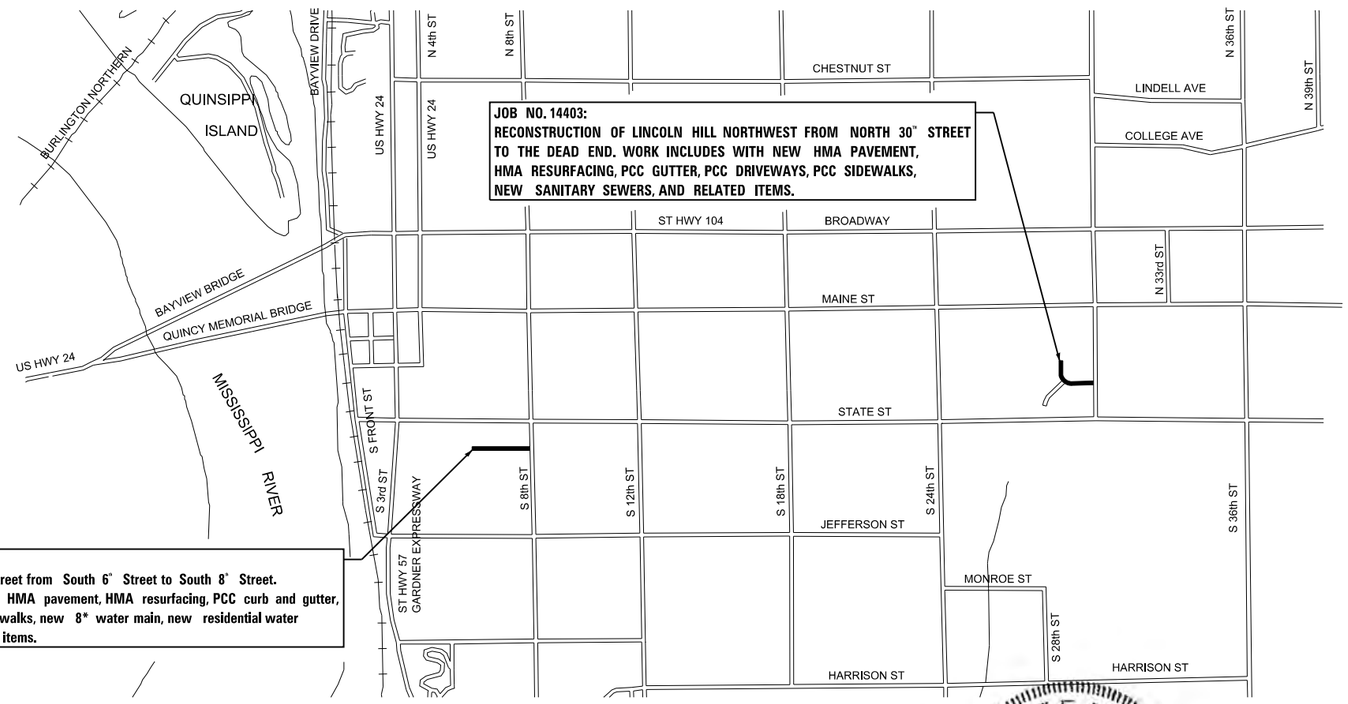

0 1/4 1/2 3/4 1 MILE
GRAPHIC SCALE IN MILES

LOCATION MAP

0 100′ 200′ 300′ — 1″ = 100′
0 10′ 20′ 30′ — 1″ = 10′
0 50′ 100′ — 1″ = 50′
0 50′ 100′ — 1″ = 40′
0 50′ 100′ — 1″ = 30′
0 50′ 100′ — 1″ = 20′

FULL SIZE PLANS HAVE BEEN PREPARED USING STANDARD ENGINEERING SCALES. REDUCED SIZED PLANS WILL NOT CONFORM TO STANDARD SCALES. IN MAKING MEASUREMENTS ON REDUCED PLANS, THE ABOVE SCALES MAY BE USED.

J.U.L.I.E.
JOINT UTILITY LOCATION INFORMATION FOR EXCAVATION
1–800–892–0123
OR 811

CITY of QUINCY ILL. INCORPORATED A.D. 1840

PLANS PREPARED BY THE CITY OF QUINCY
DEPARTMENT OF UTILITIES
AND ENGINEERING

STEVE E. BANGE
062-053338
LICENSED PROFESSIONAL ENGINEER
ILLINOIS

Steve E. Bange 9/1/16

STEVE E. BANGE, P.E. DATE
REGISTERED PROFESSIONAL ENGINEER
STATE OF ILLINOIS NO 062-053338
LICENSE EXPIRES NOVEMBER 30, 2017

APPROVED September 1 20 16
CITY OF QUINCY, MAYOR

INDEX OF SHEETS

1	COVER SHEET
2	INDEX OF SHEETS, HIGHWAY STANDARDS, AND GENERAL NOTES
3-4	SUMMARY OF QUANTITIES
	JOB NO 14403 - LINCOLN HILL NORTHWEST
5	TYPICAL SECTIONS & ALIGNMENT INFORMATION
6-7	PLAN & PROFILE
8-9	REMOVAL PLAN
10	GEOMETRIC DETAILS
11-23	CROSS SECTIONS - LINCOLN HILL NORTHWEST
	JOB NO 14706 - OHIO ST.
24	TYPICAL SECTIONS & ALIGNMENT INFORMATION
25-26	PLAN & PROFILE
27	REMOVAL PLAN
28-30	GEOMETRIC DETAILS
31	WATER MAIN PLAN
32-37	CROSS SECTIONS - OHIO STREET
	ALL JOBS
38	TRAFFIC CONTROL AND PROTECTION
39-44	MISCELLANEOUS DETAILS

HIGHWAY STANDARDS

000001-06	STANDARD SYMBOLS, ABBREVIATIONS AND PATTERNS
280001-07	TEMPORARY EROSION CONTROL SYSTEMS
424001-08	PERPENDICULAR CURB RAMPS FOR SIDEWALKS
424006-02	DIAGONAL CURB RAMPS FOR SIDEWALKS
442201-03	CLASS C AND D PATCHES
602301-04	INLET, TYPE A
602401-03	MANHOLE, TYPE A
604001-04	FRAME AND LIDS, TYPE 1
604006-05	FRAME AND GRATE, TYPE 3
604046-03	FRAME AND LID, TYPE 15
606001-06	CONCRETE CURB TYPE B AND COMBINATION CONCRETE CURB AND GUTTER
701001-02	OFF-ROAD OPERATIONS, 2L, 2W, MORE THAN 15' (4.5 M) AWAY
701006-05	OFF-ROAD OPERATIONS, 2L, 2W, 15' (4.5 M) TO 24'' (600 MM) FROM PAVEMENT EDGE
701011-04	OFF-ROAD MOVING OPERATIONS, 2L, 2W, DAY ONLY
701801-06	SIDEWALK, CORNER OR CROSSWALK CLOSURE
701901-05	TRAFFIC CONTROL DEVICES
720001-01	SIGN PANEL MOUNTING DETAILS
720011-01	METAL POSTS FOR SIGNS, MARKERS AND DELINEATORS

GENERAL NOTES

1 THICKNESS. DEVIATIONS FROM THE NOMINAL THICKNESS WILL BE PERMITTED WHEN SUCH DEVIATIONS OCCUR DUE TO IRREGULARITIES IN THE EXISTING SURFACE OR BASE ON WHICH THE BITUMINOUS MIXTURE IS PLACED.

2. THE CONTRACTOR SHALL PROTECT AND CAREFULLY PRESERVE ALL PROPERTY MARKERS AND MONUMENTS UNTIL THE OWNER, AUTHORIZED AGENT, OR LAND SURVEYOR HAS WITNESSED OR OTHERWISE REFERENCED THEIR LOCATION. WHERE SECTION OR SUB-SECTION MONUMENTS ARE ENCOUNTERED, THE ENGINEER SHALL BE NOTIFIED BEFORE SUCH MONUMENTS ARE REMOVED. THE CONTRACTOR SHALL BE RESPONSIBLE FOR HAVING AN AUTHORIZED SURVEYOR RE-ESTABLISH ANY SECTIN OR SUB-SECTION MONUMENTS DESTROYED BY HIS OPERATIONS.

3. ALL DISTURBED AREAS CAUSED BY THIS PROJECT SHALL BE SEEDED , FERTILIZED, AND MULCHED AS SHOWN IN THE PLANS AND AS DIRECTED BY THE ENGINEER.

4. THE CONTRACTOR SHALL BE RESPONSIBLE FOR PROTECTING UTILITY PROPERTY FROM CONSTRUCTION OPERATIONS AS OUTLINED IN ARTICLE 107.31 OF THE STANDARD SPECIFICATIONS. THE J.U.L.I.E. NUMBER IS 1-800-892-0123. A MINIMUM OF 48 HOURS ADVANCE NOTICE IS REQUIRED.

5. THE LOCATION OF BURIED AND ABOVE GROUND UTILITIES SHOWN ARE APPROXIMATE, AND ARE SHOWN FOR THE CONTRACTOR INFORMATIONAL USE ONLY, AND ARE NOT TO BE REFERENCED FOR CONSTRUCTION PURPOSES. THE IMPLIED PRESENCE OR ABSENCE OF UTILITIES IS NOT TO BE CONSTRUED BY THE THE OWNER, ENGINEER, CONTRACTOR, OR SUBCONTRACTORS TO BE AN ACCURATE AND COMPLETE REPRESENTATION OF UTILITIES THAT MAY OR MAY NOT EXIST ON THE CONSTRUCTION SITE. BURIED AND ABOVE GROUND UTILITY LOCATIONS, IDENTIFICATION, AND MARKING ARE THE SOLE RESPONSIBILITY OF THE CONTRACTOR. REROUTING, DISCONNECTION, PROTECTION, ETC. OF ANY UTILITIESMUST BE COORDINATED BETWEEN THE CONTRACTOR, UTILITY COMPANY, AND OWNER. SITE SAFETY, INCLUDING THE AVOIDANCE OF HAZARDS ASSOCIATED WITH BURIED AND ABOVE GROUND UTILITIES, REMAINS THE SOLE RESPONSIBILITY OF THE CONTRACTOR.

6. IN ADDITION TO FIELD SURVEYS, PLAN DIMENSIONS AND DETAILS RELATIVE TO THE EXISTING FACILITES HAVE BEEN TAKEN FROM EXISTING PLANS AND ARE SUBJECT TO CONSTRUCTION VARIATIONS. IT SHALL BE THE CONTRACTORS RESPONSIBILITY TO VERIFY SUCH DIMENSIONS AND DETAILS IN THE FIELD. SUCH VARIATIONS SHALL NOT BE A CAUSE FOR ADDITIONAL COMPENSATION DUE TO A CHANGE IN THE SCOPE OF WORK: HOWEVER, THE CONTRACTOR WILL BE PAID FOR THE QUANTITY ACTUALLY FURNISHED AT THE UNIT PRICE BID FOR THE WORK. THE THICKNESS OF BITUMINOUS MIXTURES SHOWN ON THE PLANS IS THE NOMINAL.

7. ANY REFERENCE TO A STANDARD IN THESE PLANS SHALL BE INTERPRETED TO MEAN THE EDITION AS INDICATED BY THE SUB-NUMBER IN THE INDEX OF SHEETS OR THE COPY OF THE STANDARD INCLUDED IN THESE PLANS.

8. ANY EXISTING ROAD SIGNS THAT INTERFERE WITH CONSTRUCTION WILL BE REMOVED OR RELOCATED AS DIRECTED BY THE ENGINEER. AFTER THE CONSTRUCTION IS COMPLETED, THE CONTRACTOR WILL REPLACE THE SIGNS AS DIRECTED BY THE ENGINEER. THIS WORK WILL NO ADDITIONAL COST TO THE DEPARTMENT.

9. ALL SAW CUTS, NECESSARY TO COMPLETE THE WORK DETAILED IN THESE PLANS, SHALL BE INCLUDED IN THE COST FOR THE VARIOUS PAY ITEMS INVOLVED.

10. SEEDING WILL NOT BE PERMITTED AT AY TIME WHEN THE GROUND IS FROZEN, WET, OR IN AN UNTILLABLE CONDITION. LOCATIONS TO BE SEEDED SHALL BE DETERMINED BY THE ENGINEER.

RATES OF APPLICATION TABLE

AGGREGATE (SURFACE, BASE, SUBBASE, OR BACKFILL)	2.05 TON / CU YD
STONE DUMPED RIPRAP	1.50 TON / CU YD
HOT-MIX ASPHALT:	
BITUMINOUS MATERIALS (TACK COAT)	0.05 LB / SQ FT (on milled HMA)
	0.025 LB / SQ FT (on HMA lifts & brick)
BITUMINOUS MATERIALS (PRIME COAT)	0.25 LB / SQ FT (on aggregate)
SURFACE / BINDER / LEVELING BINDER (112 lbs)	0.056 TON / SQ YD IN
SEEDING:	
NITROGEN FERTILIZER NUTRIENT	90 LBS / ACRE
PHOSPHORUS FERTILIZER NUTRIENT	90 LBS / ACRE
POTASSIUM FERTILIZER NUTRIENT	90 LBS / ACRE
AGRICULTURAL GROUND LIMESTONE	2.0 TON / ACRE
TEMPORARY EROSION CONTROL SEEDING	100 LBS / ACRE PER APPLICATION

ITEM NO.	ITEM	UNIT	TOTAL QUANTITY	LOCATION						
				LINCOLN HILL NORTHWEST	OHIO STREET 6TH TO 8TH					
				14403	14706					
1	EARTH EXCAVATION	CU YD	1114	385	729					
2	TRENCH BACKFILL	CU YD	1261	484	777					
3	GEOTECHNICAL FABRIC FOR GROUND STABILIZATION	SQ YD	4631	1027	3604					
4	TEMPORARY EROSION CONTROL SEEDING	POUND	100	60	40					
5	INLET AND PIPE PROTECTION	EACH	5	2	3					
6	AGGREGATE BASE COURSE, TYPE A 8"	SQ YD	4631	1027	3604					
7	AGGREGATE BASE REPAIR	TON	700	300	400					
8	BITUMINOUS MATERIALS (PRIME COAT)	POUND	9095	1870	7225					
9	BITUMINOUS MATERIALS (TACK COAT)	POUND	2195	1288	907					
10	HOT-MIX ASPHALT BINDER COURSE, IL- 9.5, N50	TON	477	207	270					
11	HOT-MIX ASPHALT SURFACE COURSE, MIX "C", N50	TON	519	207	312					
12	PAVEMENT PATCHING, TYPE II, 9 INCH	SQ YD	6		6					
13	PORTLAND CEMENT CONCRETE DRIVEWAY PAVEMENT, 6 INCH	SQ YD	560	352	208					
14	PORTLAND CEMENT CONCRETE SIDEWALK 4 INCH	SQ FT	9770	351	9419					
15	DETECTABLE WARNINGS	SQ FT	110	20	90					
16	PAVEMENT REMOVAL	SQ YD	4332	912	3420					
17	HOT-MIX ASPHALT SURFACE REMOVAL, 1 1/2"	SQ YD	2297	1796	501					
18	DRIVEWAY PAVEMENT REMOVAL	SQ YD	478	362	116					
19	CURB REMOVAL	FOOT	1859		1859					
20	GUTTER REMOVAL	FOOT	1739	1739						
21	SIDEWALK REMOVAL	SQ FT	10728	200	10528					
22	PAVEMENT PATCHING, TYPE IV, 6 INCH	SQ YD	107	107						
23	PAVEMENT PATCHING, TYPE IV, 9 INCH	SQ YD	92	39	53					
24	CLASS C PATCHES, TYPE IV, 12 INCH	SQ YD	57		57					
25	INLETS, TYPE A, TYPE 3 FRAME AND GRATE	EACH	3		3					
26	INLETS, TYPE A, TYPE 15 FRAME AND LID	EACH	1	1						
27	MANHOLES TO BE ADJUSTED	EACH	3		3					
28	MANHOLES TO BE ADJUSTED WITH NEW TYPE 1 FRAME, CLOSED LID	EACH	6	2	4					
29	REMOVING MANHOLES	EACH	2	2						
30	REMOVING INLETS	EACH	4	1	3					

ITEM NO.	ITEM	UNIT	TOTAL QUANTITY	LOCATION						
				LINCOLN HILL NORTHWEST 14403	OHIO STREET 6TH TO 8TH 14706					
31	COMBINATION CONCRETE CURB AND GUTTER, TYPE B-6.12	FOOT	2024	220	1804					
32	COMBINATION CONCRETE CURB AND GUTTER, TYPE B-6.24	FOOT	69		69					
33	OBJECT MARKER - TYPE 4	EACH	6	6						
34	METAL POST - TYPE A	FOOT	66	66						
35	CONCRETE GUTTER, TYPE V-12.12	FOOT	1654	1654						
36	SEEDING, SPECIAL	SQ YD	3584	2204	1380					
37	TRENCH FRAME AND SOLID COVER - LARGE	FOOT	13		13					
38	TRENCH FRAME AND SOLID COVER - SMALL	FOOT	102		102					
39	SANITARY SEWER REMOVAL 8"	FOOT	662	662						
40	SANITARY SERVICE REPLACEMENT	EACH	8	6	2					
41	MANHOLES, SANITARY, 4'-DIAMETER, TYPE 1 FRAME, CLOSED LID	EACH	3	3						
42	SANITARY SEWER, TYPE 2 8"	FOOT	470	470						
43	VALVE BOX FRAMES TO BE ADJUSTED	EACH	2	2						
44	DOMESTIC METER VAULTS TO BE MOVED	EACH	2	2						
45	ADJUSTING WATER SERVICE LINES	FOOT	120	120						
46	C900 (DR-18) PVC WATERMAIN, 8"	FOOT	1000		1000					
47	WATER SERVICE LINE 1"	FOOT	1170		1170					
48	6" TAPPING SLEEVE	EACH	2		2					
49	12" X 8" TAPPING CROSS	EACH	1		1					
50	6" TAPPING VALVE	EACH	2		2					
51	8" TAPPING VALVE	EACH	2		2					
52	8" MJ X 6" PE REDUCER	EACH	2		2					
53	FIRE HYDRANTS TO BE REMOVED AND REPLACED	EACH	1		1					
54	CURB BOXES TO BE ADJUSTED	EACH	12	12						
55	CURB BOX, ROD, AND LID	EACH	32	2	30					
56	CONSTRUCTION LAYOUT, LOCATION 1	LSUM	1	1						
57	CONSTRUCTION LAYOUT, LOCATION 2	LSUM	1		1					
58	REMOVAL OF LIGHTING UNIT, NO SALVAGE	EACH	2		2					
59	TRAFFIC CONTROL AND PROTECTION (SPECIAL), LOCATION 1	EACH	1	1						
60	TRAFFIC CONTROL AND PROTECTION (SPECIAL), LOCATION 2	EACH	1		1					
61	TEMPOARY ACCESS (ROAD)	EACH	1	1						

PAVEMENT CROSS SLOPES

STATION	LT	RT
6+15	+4.0%	-4.0%
8+00	+4.0%	-4.0%
8+90	-1.5%	+1.5%
9+50	-1.5%	
9+55	-1.2% •	-2.7% •

• - MATCH EXISTING

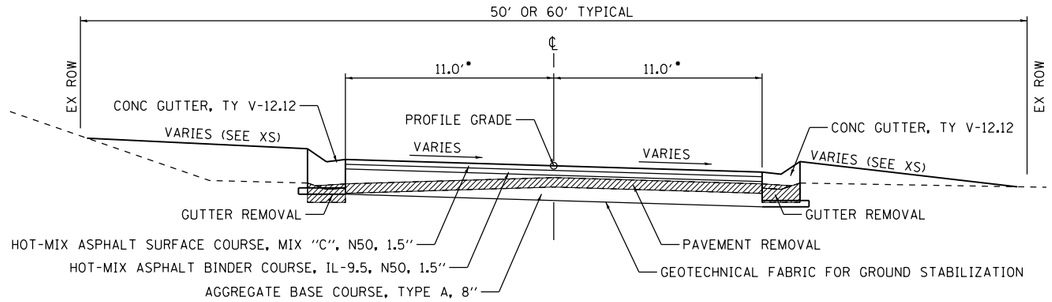

TYPICAL SECTION – LINCOLN HILL NORTHWEST

STA 6+15.0 TO 9+55.0

MIXTURE REQUIREMENTS

LOCATION(S)	LINCOLN HILL NORTHWEST	LINCOLN HILL NORTHWEST
MIXTURE USE(S)	SURFACE INCIDENTAL	BINDER
AC/PG	PG 64-22	PG 64-22
RAP % (MAX)	10%	25%
DESIGN AIR VOIDS	4% N50 DESIGN	4% N50 DESIGN
MIXTURE COMPOSITION (MIXTURE GRADATION)	IL 9.5 OR IL 12.5	IL 9.5
FRICTION AGGREGATE	MIX "C"	-

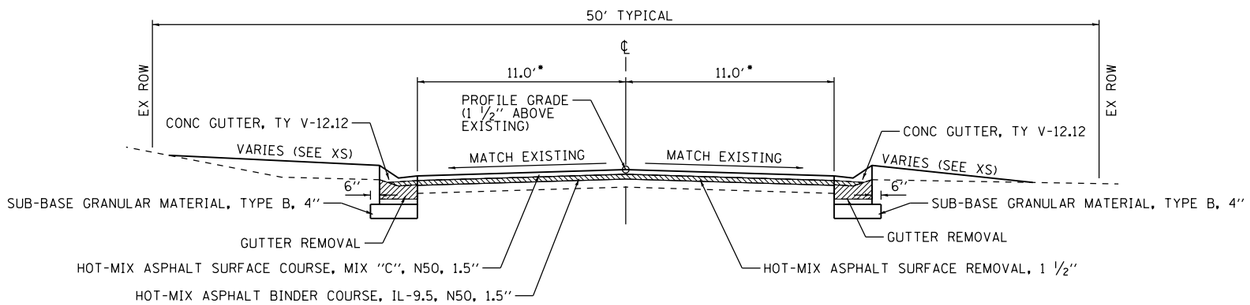

TYPICAL SECTION – LINCOLN HILL NORTHWEST

STA 9+55.0 TO 14+79.3

• - ADJUST AS NEEDED TO MATCH EXISTING BACK OF CURB LOCATIONS

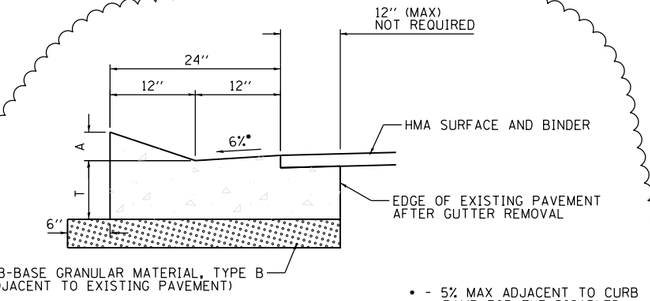

• - 5% MAX ADJACENT TO CURB RAMP FOR THE DISABLED

GENERAL NOTES

T = 9" ADJACENT TO FLEXIBLE PAVEMENT OR SAME THICKNESS AS RIGID PAVEMENT

A = 4" TYPICAL

1 1/2" AT DRIVEWAYS

1/2" AT CURB RAMPS FOR THE DISABLED

WHEN PLACED ADJACENT TO EXISTING PAVEMENT OR BASE, THE COST OF FURNISHING AND PLACING SUB-BASE GRANULAR MATERIAL, TYPE B SHALL BE INCLUDED IN THE UNIT PRICE BID FOR "CONCRETE GUTTER, TYPE V-12.12".

THE CONSTRACTOR SHALL HAVE THE OPTION OF REMOVING UP TO 12" OF THE EXISTING PAVEMENT IN ORDER TO USE SLIP FORM CONSTRUCTION. THE REMOVAL OF THE ADDITIONAL PAVEMENT AND THE ADDITIONAL CONCRETE GUTTER SHALL BE INCLUDED IN THE UNIT PRICE BID FOR "CONCRETE GUTTER, TYPE V-12.12".

SEE HIGHWAY STANDARD 606001 FOR DETAILS NOT SHOWN.

CONCRETE GUTTER, TYPE V–12.12

9/7/16 SEB

MIXTURE REQUIREMENTS

LOCATION(S)	LINCOLN HILL NW	LINCOLN HILL NW
MIXTURE USE(S)	SURFACE INCIDENTAL	BINDER
AC/PG	PG 64-22	PG 64-22
RAP % (MAX)	10%	25%
DESIGN AIR VOIDS	4% N50 DESIGN	4% N50 DESIGN
MIXTURE COMPOSITION (MIXTURE GRADATION)	IL 9.5 OR IL 12.5	IL 9.5
FRICTION AGGREGATE	MIX "C"	-

ALIGNMENT CONTROL POINTS

POINT#	NORTHING	EASTING	LINCOLN HILL NORTHWEST STATION	LINCOLN HILL COURT NORTHWEST STATION
100	1,190,411.84	1,959,164.44	4+93.89	-
PC LH3	1,190,048.09	1,959,159.24	8+57.68	-
PI LH3	1,189,890.26	1,959,156.99	9+82.26	-
102	1,189,924.00	1,959,215.48	9+98.41	30+00.82
PT LH3	1,189,885.87	1,959,314.77	11+06.84	-
101	1,189,874.92	1,959,707.78	15+00.00	-
103	1,189,790.90	1,959,065.10	-	28+00.00

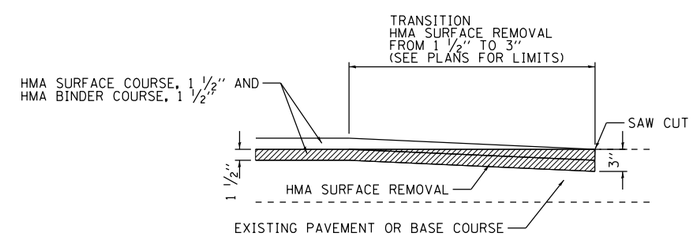

LINCOLN HILL NORTHWEST – BUTT JOINT DETAIL

THE COST OF THE BUTT JOINTS, TEMPORARY RAMP, AND SAW CUTS SHALL BE INCLUDED IN THE UNIT PRICE BID FOR "HOT-MIX ASPHALT SURFACE REMOVAL 3 INCH".

FILE NAME = F:\PROJECT FILES\MR0599 2016 Capital Maint\CADD SHEETS\BID PACKAGE 2\BP2.005.Sht TYP.14403.LH.dgn

CITY OF QUINCY UTILITIES & ENGINEERING	USER NAME = sbange	DESIGNED - SEB	REVISED - 9/7/16 SEB	CITY OF QUINCY, ILLINOIS 2016 CAPITAL MAINTENANCE PROGRAM WARDS 4 AND 7	LINCOLN HILL NORTHWEST – TYPICAL SECTIONS & ALIGNMENT INFORMATION
		DRAWN - SEB	REVISED -		
	PLOT SCALE = 40.0000 ' / in.	CHECKED -	REVISED -		
	PLOT DATE = 9/7/2016	DATE -	REVISED -		SCALE: NONE · SHEET NO. 1 OF 1 SHEETS · STA. TO STA.

CITY OF QUINCY PROJECT NO. MR-599B	TOTAL SHEETS	SHEET NO.
JOB NO. 14403	44	5

SANITARY SEWER LEGEND

(S1) — STA 5+20.9 0.8′ LT (FIELD VERIFY)
EXISTING SANITARY MANHOLE TO REMAIN
CONNECT PROPOSED STORM SEWER AT
EXISTING PIPE ELEVATION.
COST TO BE INCLUDED IN PRICE FOR STORM SEWER.

(S2) — SANITARY SEWER, TYPE 2 8″, 266′
USFL = 620.20 DSFL = 615.90 (MATCH EX)
SLOPE = 1.6%
TRENCH BACKFILL = 188 CU YD
SANITARY SERVICE REPLACEMENT, 2 EACH
TRENCH BACKFILL = 25 CU YD

(S3) — STA 7+90.9 0.4′ RT
MH, SANITARY, 4′-Ø, TY 1 FR, CLSD LID, 1 EACH
TOP LID = 627.55
FL (N) = 620.20
FL (S) = 620.40
MATCH EXISTING FL FOR LATERALS (FIELD VERIFY)
SANITARY SERVICE REPLACEMENT, 3 EACH
TRENCH BACKFILL = 39 CU YD

(S4) — SANITARY SEWER, TYPE 2 8″, 117′
USFL = 622.30 DSFL = 620.40
SLOPE = 1.6%
TRENCH BACKFILL = 115 CU YD
SANITARY SERVICE REPLACEMENT, 1 EACH
TRENCH BACKFILL = 13 CU YD

(S5) — STA 9+09.9 9.8′ RT
MH, SANITARY, 4′-Ø, TY 1 FR, CLSD LID, 1 EACH
TOP LID = 630.91
FL (N) = 622.30
FL (S) = 622.50

(S6) — SANITARY SEWER, TYPE 2 8″, 87′
USFL = 623.90 DSFL = 622.50
SLOPE = 1.6%
TRENCH BACKFILL = 104 CU YD

(S7) — STA 9+97.2 6.4′ RT
MH, SANITARY, 4′-Ø, TY 1 FR, CLSD LID, 1 EACH
TOP LID = 634.13
FL (N) = 623.90
FL (SE) = 624.30 (MATCH EXISTING)
FL (SW) = 624.10 (MATCH EXISTING)

NOTE: EXACT SEWER LATERAL LOCATIONS ARE UNKNOWN. THE CONTRACTOR SHALL BE RESPONSIBLE FOR LOCATING THEIR LOCATION AND CONNECTING THEM TO THE MAIN.

SEWER LATERALS SHALL BE REPLACED TO 2′ BEYOND THE BACK OF THE CURB.

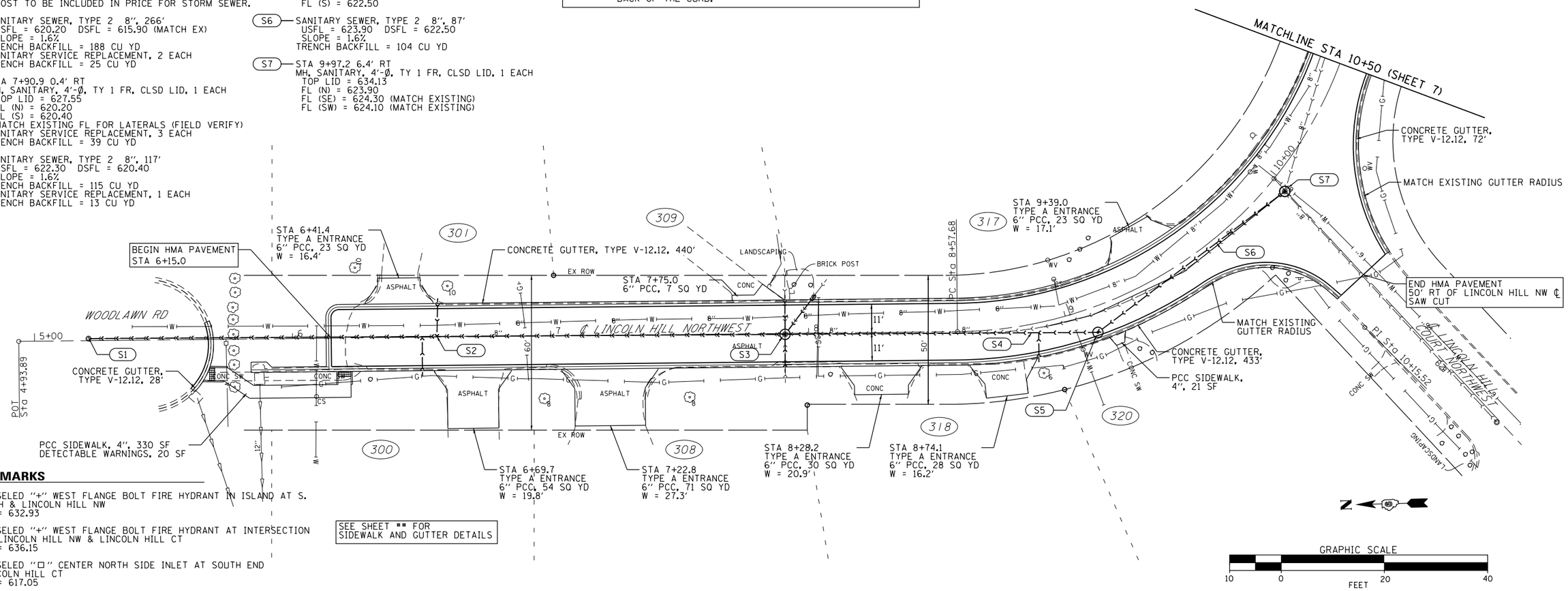

BENCHMARKS

1. CHISELED "+" WEST FLANGE BOLT FIRE HYDRANT IN ISLAND AT S. 30TH & LINCOLN HILL NW
EL = 632.93

2. CHISELED "+" WEST FLANGE BOLT FIRE HYDRANT AT INTERSECTION OF LINCOLN HILL NW & LINCOLN HILL CT
EL = 636.15

3. CHISELED "□" CENTER NORTH SIDE INLET AT SOUTH END LINCOLN HILL CT
EL = 617.05

SEE SHEET ## FOR SIDEWALK AND GUTTER DETAILS

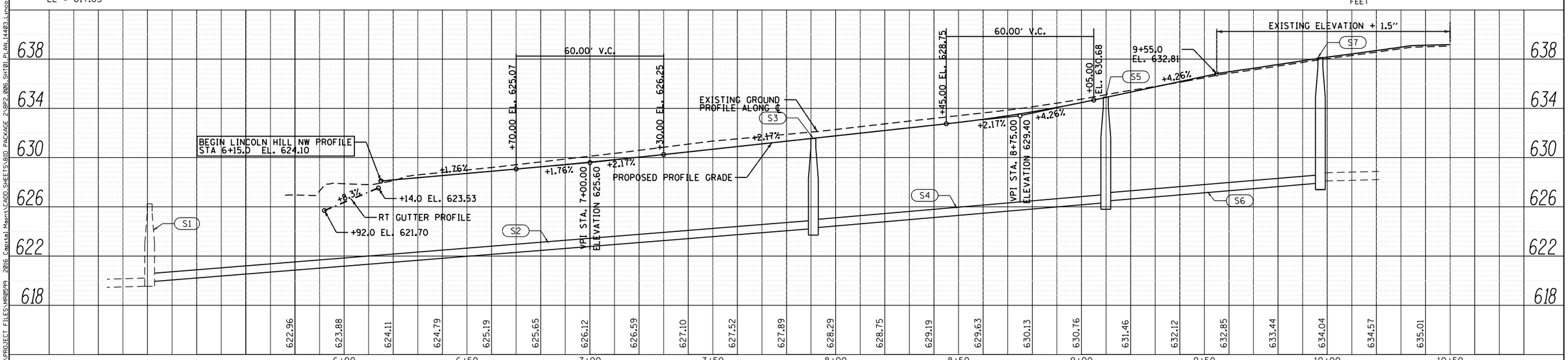

CITY OF QUINCY UTILITIES & ENGINEERING	USER NAME = sbange	DESIGNED -	REVISED -
		DRAWN -	REVISED -
	PLOT SCALE = 40.0000 ' / in.	CHECKED -	REVISED -
	PLOT DATE = 9/1/2016	DATE -	REVISED -

CITY OF QUINCY, ILLINOIS
2016 CAPITAL MAINTENANCE PROGRAM
WARDS 4 AND 7

LINCOLN HILL NORTHWEST
PLAN AND PROFILE

SCALE: 1″=20′ (FS) | SHEET NO. 1 OF 2 SHEETS | STA. 5+00 TO STA. 10+50

CITY OF QUINCY PROJECT NO. MR-599B	TOTAL SHEETS	SHEET NO.
JOB NO. 14403	44	6

PLAN: SURVEYED / PLOTTED / ALIGNMENT CHECKED / RT. OF WAY CHECKED / CADD FILE NAME / NOTE BOOK NO. / BY / DATE

PROFILE: SURVEYED / PLOTTED / GRADES CHECKED / BKM. NOTED / STRUCTURE NOTATNS CHKD / NOTE BOOK NO. / BY / DATE

FILE NAME = F:\PROJECT FILES\MR0599 2016 Capital Maint\CADD\SHEETS\BID PACKAGE 2\BP2.006.SHT01.PLAN.14403.Lincolnhl.dgn

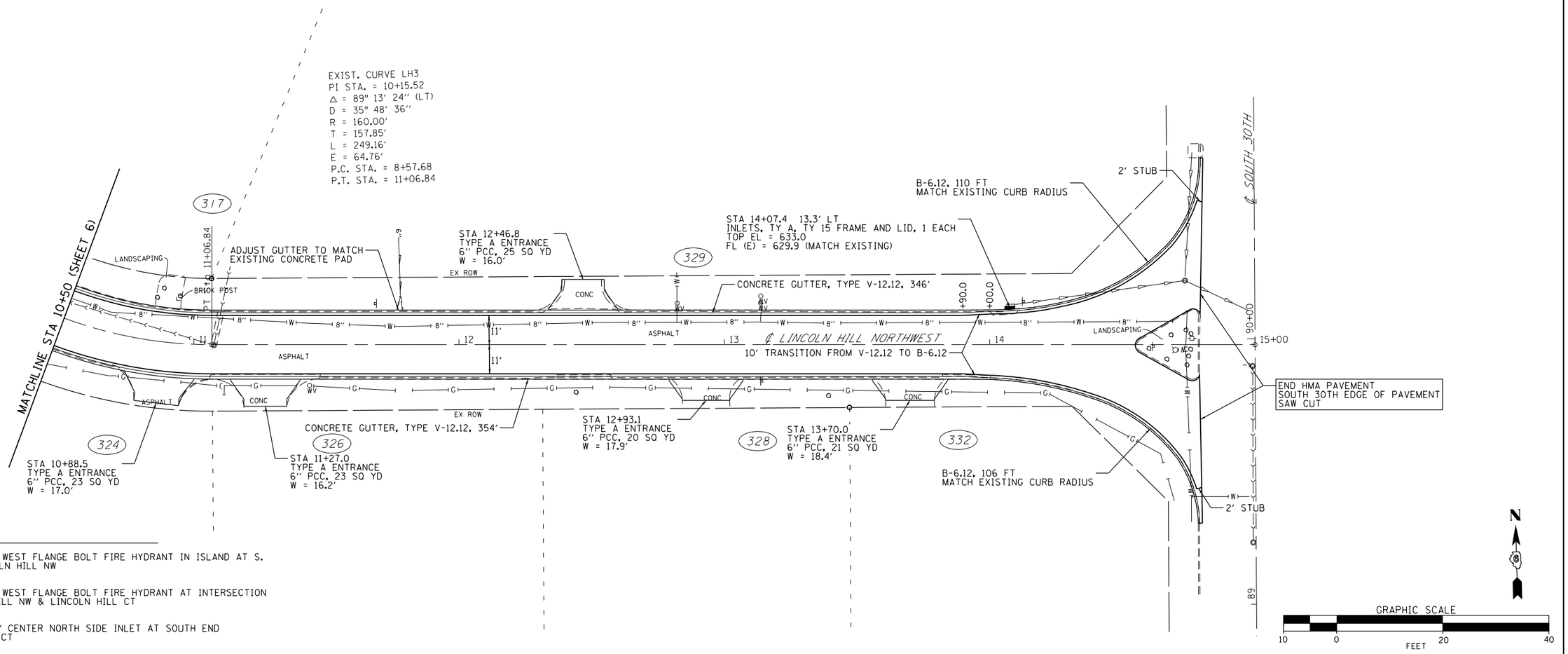

BENCHMARKS

1. CHISELED "+" WEST FLANGE BOLT FIRE HYDRANT IN ISLAND AT S. 30TH & LINCOLN HILL NW
   EL = 632.93
2. CHISELED "+" WEST FLANGE BOLT FIRE HYDRANT AT INTERSECTION OF LINCOLN HILL NW & LINCOLN HILL CT
   EL = 636.15
3. CHISELED "□" CENTER NORTH SIDE INLET AT SOUTH END LINCOLN HILL CT
   EL = 617.05

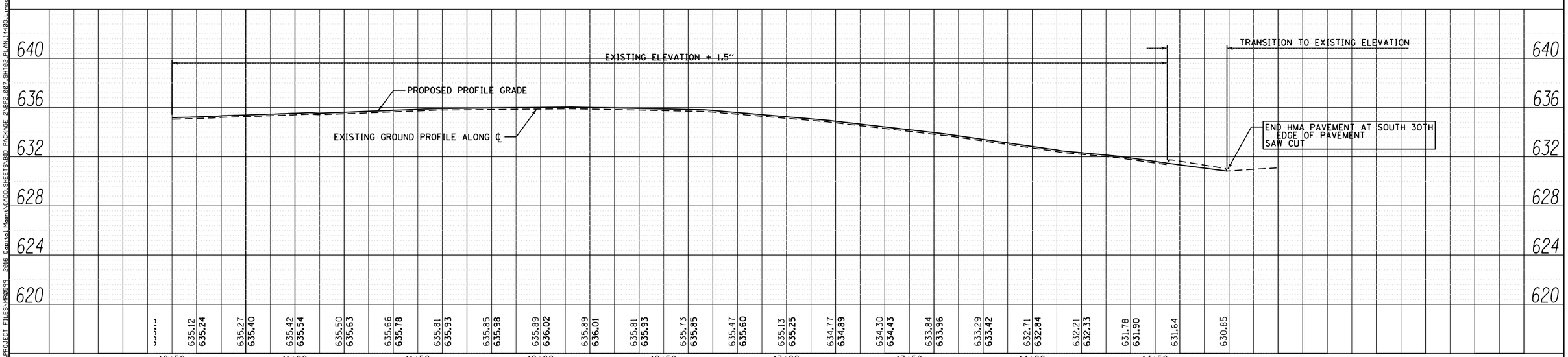

PLAN	BY	DATE
SURVEYED		
PLOTTED		
ROADWAY CHECKED		
R/W CHECKED		
CADD FILE NAME		
NOTE BOOK NO.		

PROFILE	BY	DATE
SURVEYED		
PLOTTED		
ROADWAY CHECKED		
BM. NOTED		
STRUCTURE NOTATNS CHKD		
NOTE BOOK NO.		

FILE NAME = F:\PROJECT FILES\MR0599 2016 Capital Maint\CADD\SHEETS\BID PACKAGE 2\BP2.007.SHT02.PLAN.14403.Lincolnhill.dgn

CITY OF QUINCY UTILITIES & ENGINEERING

USER NAME = sbange	DESIGNED -	REVISED -
	DRAWN -	REVISED -
PLOT SCALE = 40.0000 ' / in.	CHECKED -	REVISED -
PLOT DATE = 9/1/2016	DATE -	REVISED -

CITY OF QUINCY, ILLINOIS
2016 CAPITAL MAINTENANCE PROGRAM
WARDS 4 AND 7

LINCOLN HILL NORTHWEST
PLAN AND PROFILE

SCALE: 1″=20′ (FS) | SHEET NO. 2 OF 2 SHEETS | STA. 10+50 TO STA. 15+00

CITY OF QUINCY PROJECT NO. MR-599B	TOTAL SHEETS	SHEET NO.
JOB NO. 14403	44	7

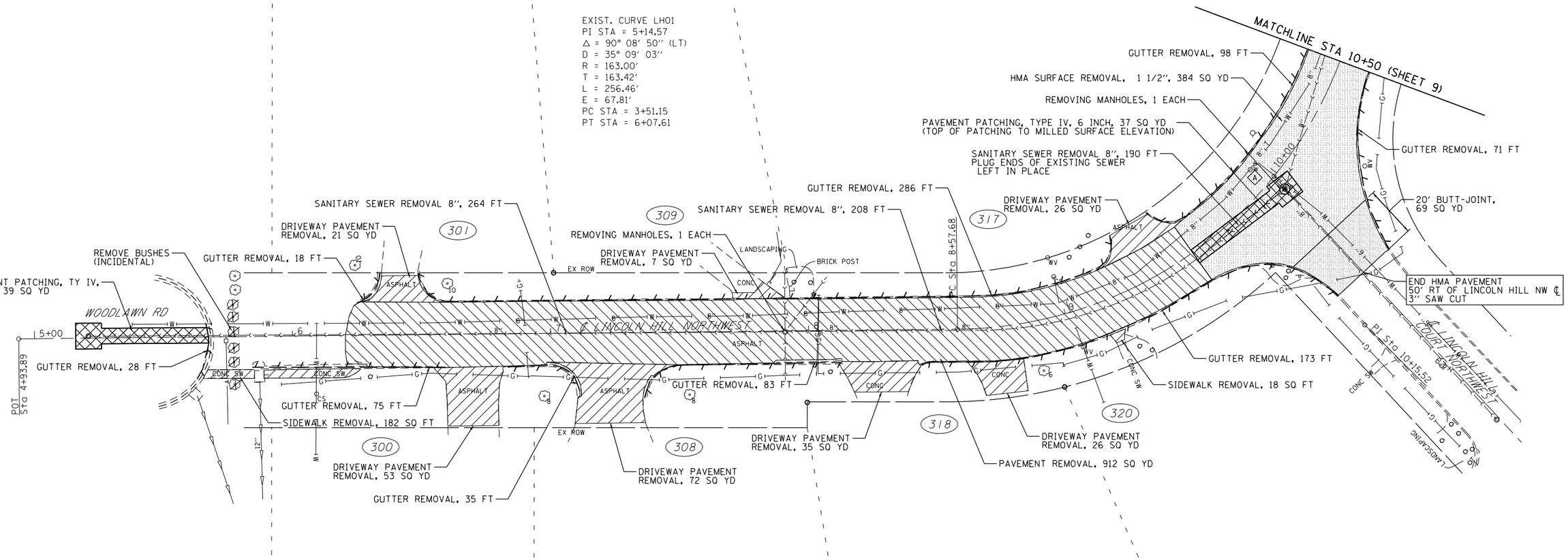

9/7/16 SEB

CURB BOXES TO BE ADJUSTED, 12 EACH
VALVE BOXES TO BE ADJUSTED, 2 EACH
(ESTIMATED QUANTITY - FIELD LOCATE RESIDENTIAL CURB BOXES).
SEE SPECIAL PROVISIONS FOR THE CITY OF QUINCY'S WATER SERVICE LOCATION DATA.

ADJUSTING WATER SERVICE LINES, 120 FT
ESTIMATED QUANTITY FOR ADJUSTING THE DEPTH OF THE WATER SERVICE LINES WHERE THEY INTERFERE WITH THE PROPOSED SEWER CONSTRUCTION.

EARTHWORK SCHEDULE

ROADWAY	STA TO STA	CUT (CU YD)	FILL (CU YD)
LINCOLN HILL NW	5+70 TO 9+55	356	9
	9+55 TO 14+80	27	24
TOTALS		383	33

NOTES

1. PAVEMENT CORE DATA INDICATED 3" OF HMA OVER 4" TO 8" OF AGGREGATE.
2. SAW CUTS WILL NOT BE MEASURED FOR PAYMENT.
3. TEMPORARY RAMPS WILL NOT BE MEASURED FOR PAYMENT.
4. THE PAY ITEM "HMA SUYRFACE REMOVAL, 1 1/2" SHALL INCLUDE THE BUTT-JOINT AREAS.

GRAPHIC SCALE
10 0 20 40
FEET

FILE NAME = F:\PROJECT FILES\MR0599 2016 Capital Mgmt\CADD SHEETS\BID PACKAGE 2\BP2 008 SH01 REMOVAL 14403 Lincoln1.dgn

CITY OF QUINCY UTILITIES & ENGINEERING	USER NAME = sbange	DESIGNED -	REVISED - 9/7/16 SEB	CITY OF QUINCY, ILLINOIS 2016 CAPITAL MAINTENANCE PROGRAM WARDS 4 AND 7	LINCOLN HILL NORTHWEST REMOVAL PLAN	CITY OF QUINCY PROJECT NO. MR-599B	TOTAL SHEETS / SHEET NO.
		DRAWN -	REVISED -			JOB NO. 14403	44 / 8
	PLOT SCALE = 40.0000 ' / in.	CHECKED -	REVISED -				
	PLOT DATE = 9/7/2016	DATE -	REVISED -		SCALE: 1"=20' (FS) SHEET NO. 1 OF 2 SHEETS STA. 5+00 TO STA. 10+50		

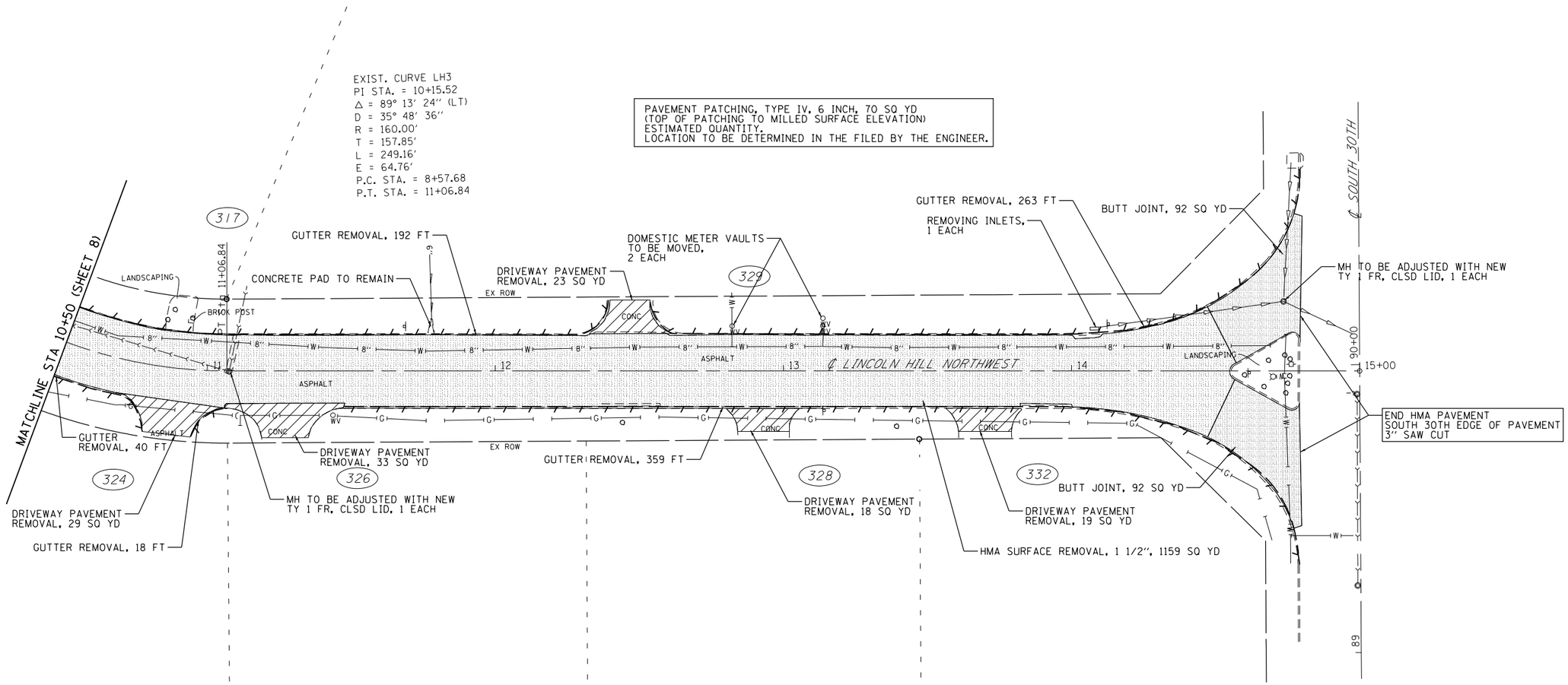

NOTES

1. PAVEMENT CORE DATA INDICATED 3″ OF HMA OVER 4″ TO 8″ OF AGGREGATE.
2. SAW CUTS WILL NOT BE MEASURED FOR PAYMENT.
3. TEMPORARY RAMPS WILL NOT BE MEASURED FOR PAYMENT.
4. THE PAY ITEM "HMA SUYRFACE REMOVAL, 1 1/2″ SHALL INCLUDE THE BUTT-JOINT AREAS.

N

GRAPHIC SCALE
10 0 20 40
FEET

FILE NAME = F:\PROJECT FILES\MR8599 2016 Capital Maint\CADD SHEETS\BID PACKAGE 2\BP2.004 SHT02 REMOVAL 14403 LincolnHdgn

CITY OF QUINCY UTILITIES & ENGINEERING	USER NAME = sbange	DESIGNED -	REVISED -	CITY OF QUINCY, ILLINOIS 2016 CAPITAL MAINTENANCE PROGRAM WARDS 4 AND 7	LINCOLN HILL NORTHWEST REMOVAL PLAN	CITY OF QUINCY PROJECT NO. MR-599B	TOTAL SHEETS / SHEET NO.
		DRAWN -	REVISED -			JOB NO. 14403	44 / 9
	PLOT SCALE = 40.0000 ' / in.	CHECKED -	REVISED -				
	PLOT DATE = 9/1/2016	DATE -	REVISED -		SCALE: 1″=20′ (FS) SHEET NO. 2 OF 2 SHEETS STA. 10+50 TO STA. 15+00		

LEGEND

- DETECTABLE WARNINGS
- SIDE CURB
- RAMP SIDE FLARE

SEE HIGHWAY STANDARDS 424001 FOR CURB RAMP DETAILS NOT SHOWN

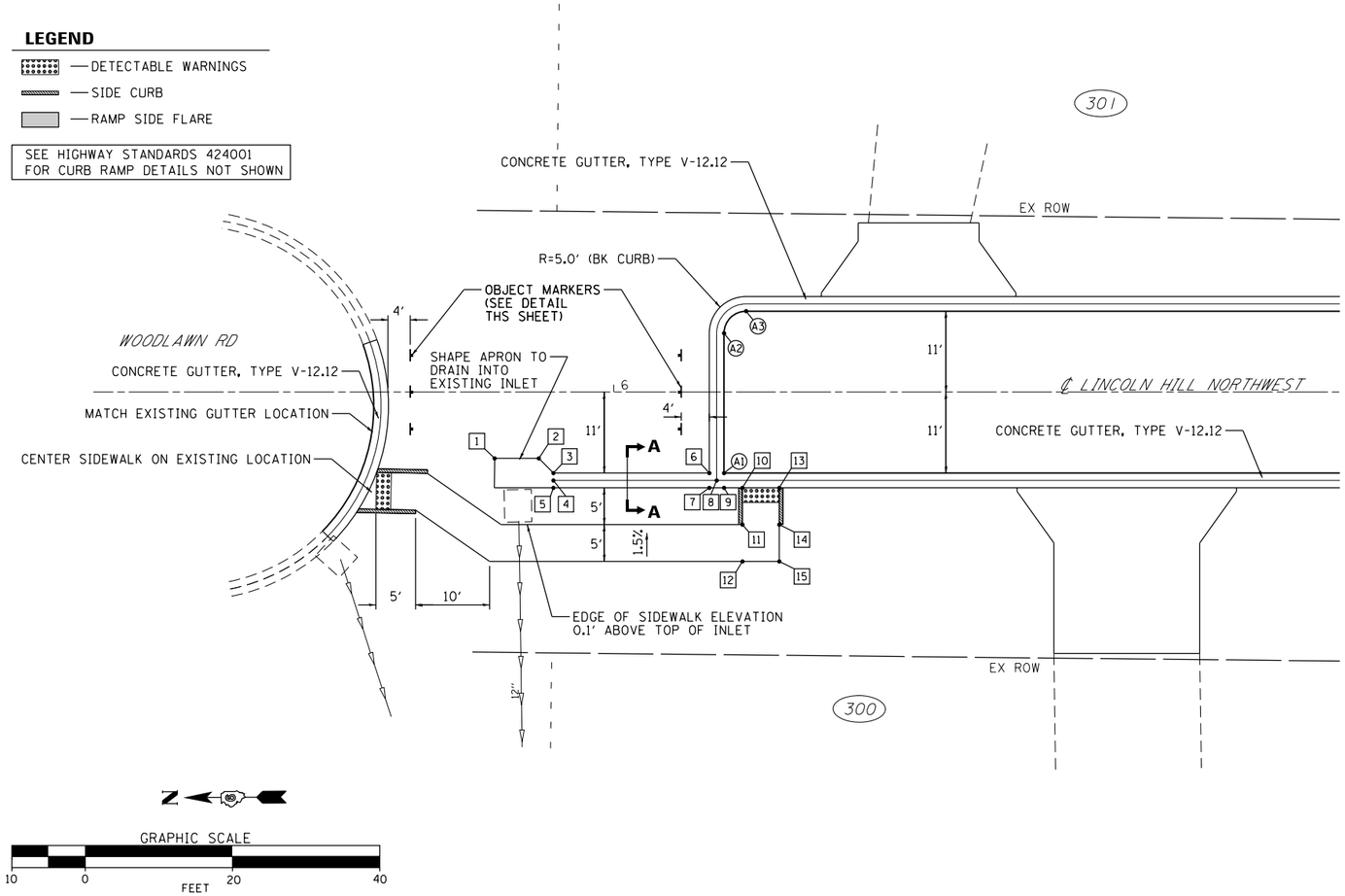

EDGE OF PAVEMENT ELEVATIONS

POINT#	LINCOLN HILL NORTHWEST STATION	OFFSET	ELEVATION
A1	6+15.0	11.00' RT	623.66
A2	6+15.0	8.0' LT	624.42
A3	6+18.0	11.00' LT	624.59

GUTTER ELEVATIONS

POINT#	LINCOLN HILL NORTHWEST STATION	OFFSET	ELEVATION
1	5+84.0	9.0' RT	621.70
2	5+90.0	9.0' RT	621.70
3	5+92.0	11.00' RT	622.03
4	5+92.0	12.00' RT	621.70 ℄
5	5+92.0	13.00' RT	622.03
6	6+13.0	11.00' RT	623.86
7	6+13.0	13.00' RT	623.86
8	6+15.0	12.00' RT	623.53 ℄
9	6+15.0	13.00' RT	623.87

SIDEWALK ELEVATIONS

POINT#	LINCOLN HILL NORTHWEST STATION	OFFSET	ELEVATION
10	6+17.50	13.00' RT	623.74
11	6+17.50	18.00' RT	624.13
12	6+17.50	23.00' RT	624.21
13	6+22.50	13.00' RT	623.83
14	6+22.50	18.00' RT	624.22
15	6+22.50	23.00' RT	624.30

9/17/16 SEB

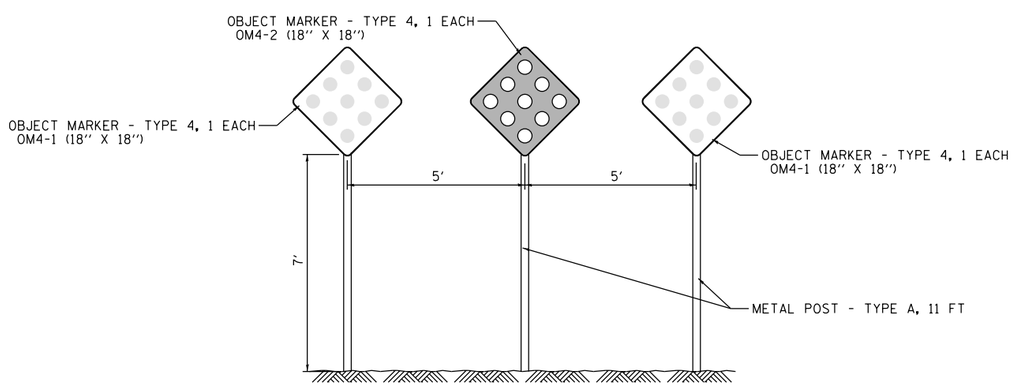

OBJECT MARKER DETAIL

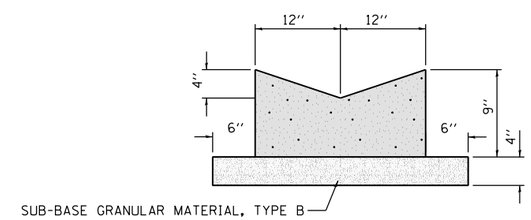

CONCRETE GUTTER SECTION A–A

NOTES: THE MODIFIED CONCRETE GUTTER SECTION AND APRON SHALL BE MEASURED FOR PAYMENT AND PAID AS "CONCRETE GUTTER, TYPE V-12.12".

THE COST OF FURNISHING AND PLACING SUB-BASE GRANULAR MATERIAL, TYPE B SHALL BE INCLUDED IN THE UNIT PRICE BID FOR "CONCRETE GUTTER, TYPE V-12.12".

FILE NAME = F:\PROJECT FILES\MR0599 2016 Capital Maint\CADD\SHEETS\BID PACKAGE 2\BP2.010.00.14403.Lincoln.dgn

CITY OF QUINCY UTILITIES & ENGINEERING	USER NAME = sbange	DESIGNED -	REVISED - 9/17/16 SEB	CITY OF QUINCY, ILLINOIS 2016 CAPITAL MAINTENANCE PROGRAM WARDS 4 AND 7	LINCOLN HILL NORTHWEST GEOMETRIC DETAILS	CITY OF QUINCY PROJECT NO. MR-599B	TOTAL SHEETS / SHEET NO.
		DRAWN -	REVISED -			JOB NO. 14403	44 / 10
	PLOT SCALE = 20.0000 ' / in.	CHECKED -	REVISED -				
	PLOT DATE = 9/7/2016	DATE -	REVISED -		SCALE: 1"=10' (FS) SHEET NO. 1 OF 1 SHEETS STA. TO STA.		

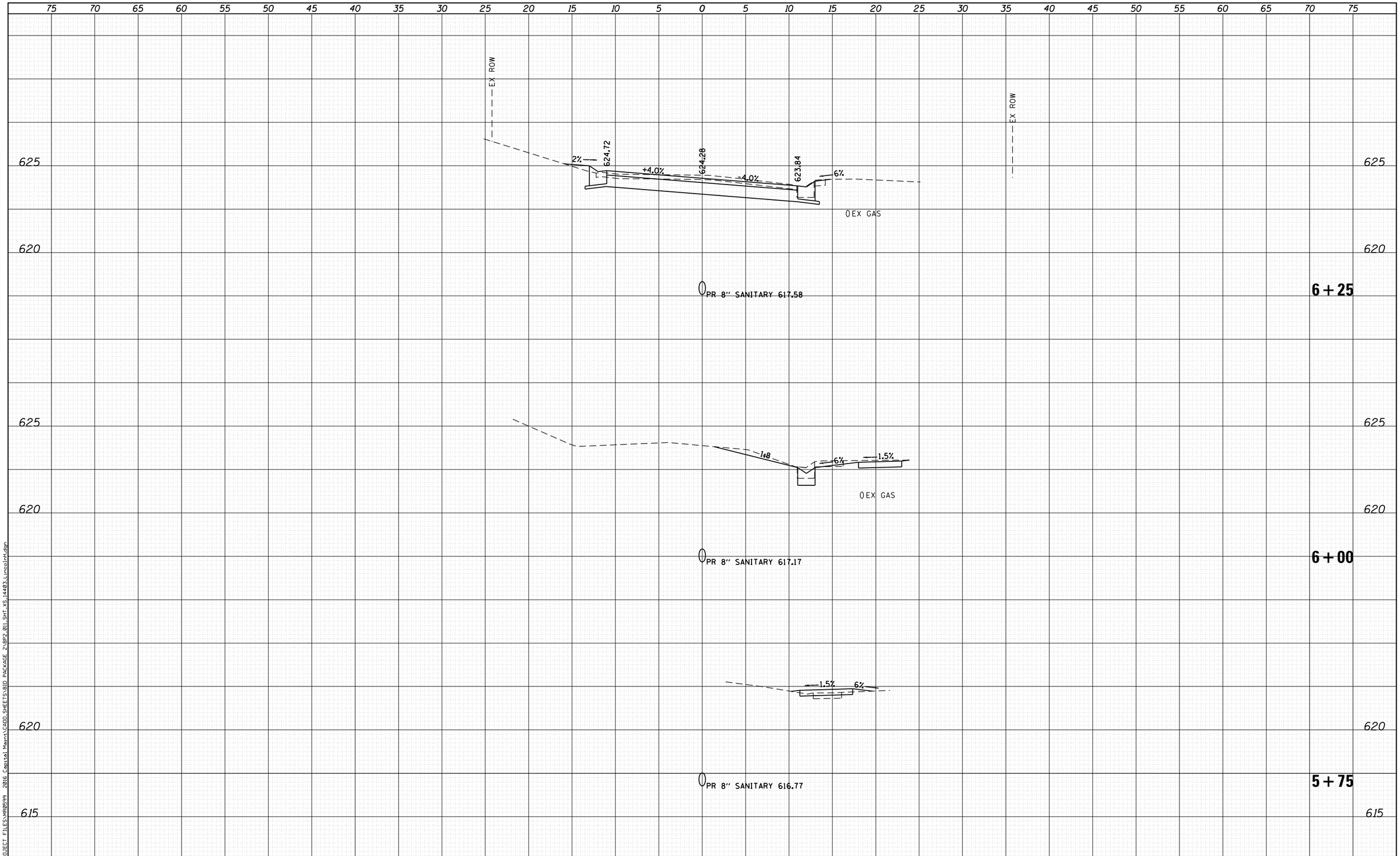

FINAL SURVEY	BY	DATE
SURVEYED		
PLOTTED		
TEMPLATE		
AREAS		
AREAS CHECKED		
NOTE BOOK NO.		

ORIGINAL SURVEY	BY	DATE
SURVEYED		
PLOTTED		
TEMPLATE		
AREAS		
AREAS CHECKED		
NOTE BOOK NO.		

FILE NAME = F:\PROJECT FILES\MR08599 2016 Capital Maint\CADD\SHEETS\BID PACKAGE 2\BP2.011.SHT_XS.14403.Lincoln1.dgn

CITY OF QUINCY UTILITIES & ENGINEERING

USER NAME = sbange	DESIGNED -	REVISED -
	DRAWN -	REVISED -
PLOT SCALE = 10.0000 ' / in.	CHECKED -	REVISED -
PLOT DATE = 9/1/2016	DATE -	REVISED -

CITY OF QUINCY, ILLINOIS
2016 CAPITAL MAINTENANCE PROGRAM
WARDS 4 AND 7

LINCOLN HILL NORTHWEST
CROSS SECTIONS

SCALE: | SHEET NO. 1 OF 13 SHEETS | STA. 5+75 TO STA. 6+25

CITY OF QUINCY PROJECT NO. MR-599B	TOTAL SHEETS	SHEET NO.
JOB NO. 14403	44	11

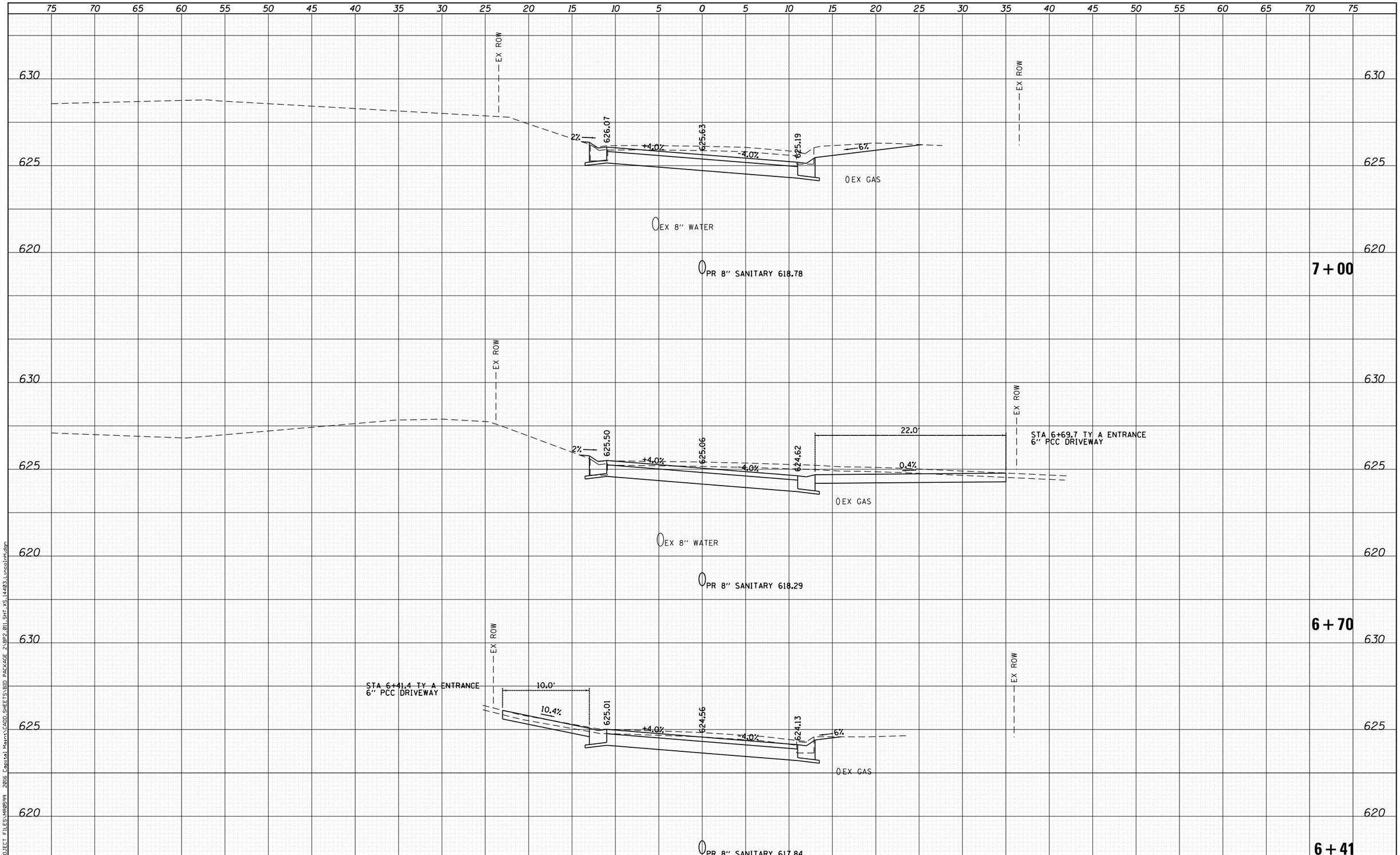

FINAL SURVEY		BY	DATE
NOTE BOOK	SURVEYED		
	PLOTTED		
	TEMPLATE		
	AREAS		
NO.	AREAS CHECKED		

ORIGINAL SURVEY		BY	DATE
NOTE BOOK	SURVEYED		
	PLOTTED		
	TEMPLATE		
	AREAS		
NO.	AREAS CHECKED		

FILE NAME = F:\PROJECT FILES\MR0599 2016 Capital Maint\CADD SHEETS\BID PACKAGE 2\BP2_011_SHT_XS_14403_Lincolnhl.dgn

CITY OF QUINCY UTILITIES & ENGINEERING

USER NAME = sbange	DESIGNED -	REVISED -
	DRAWN -	REVISED -
PLOT SCALE = 10.0000 ' / in.	CHECKED -	REVISED -
PLOT DATE = 9/1/2016	DATE -	REVISED -

CITY OF QUINCY, ILLINOIS
2016 CAPITAL MAINTENANCE PROGRAM
WARDS 4 AND 7

LINCOLN HILL NORTHWEST
CROSS SECTIONS

SCALE: | SHEET NO. 2 OF 13 SHEETS | STA. 6+41 TO STA. 7+00

CITY OF QUINCY PROJECT NO. MR-599B	TOTAL SHEETS	SHEET NO.
JOB NO. 14403	44	12

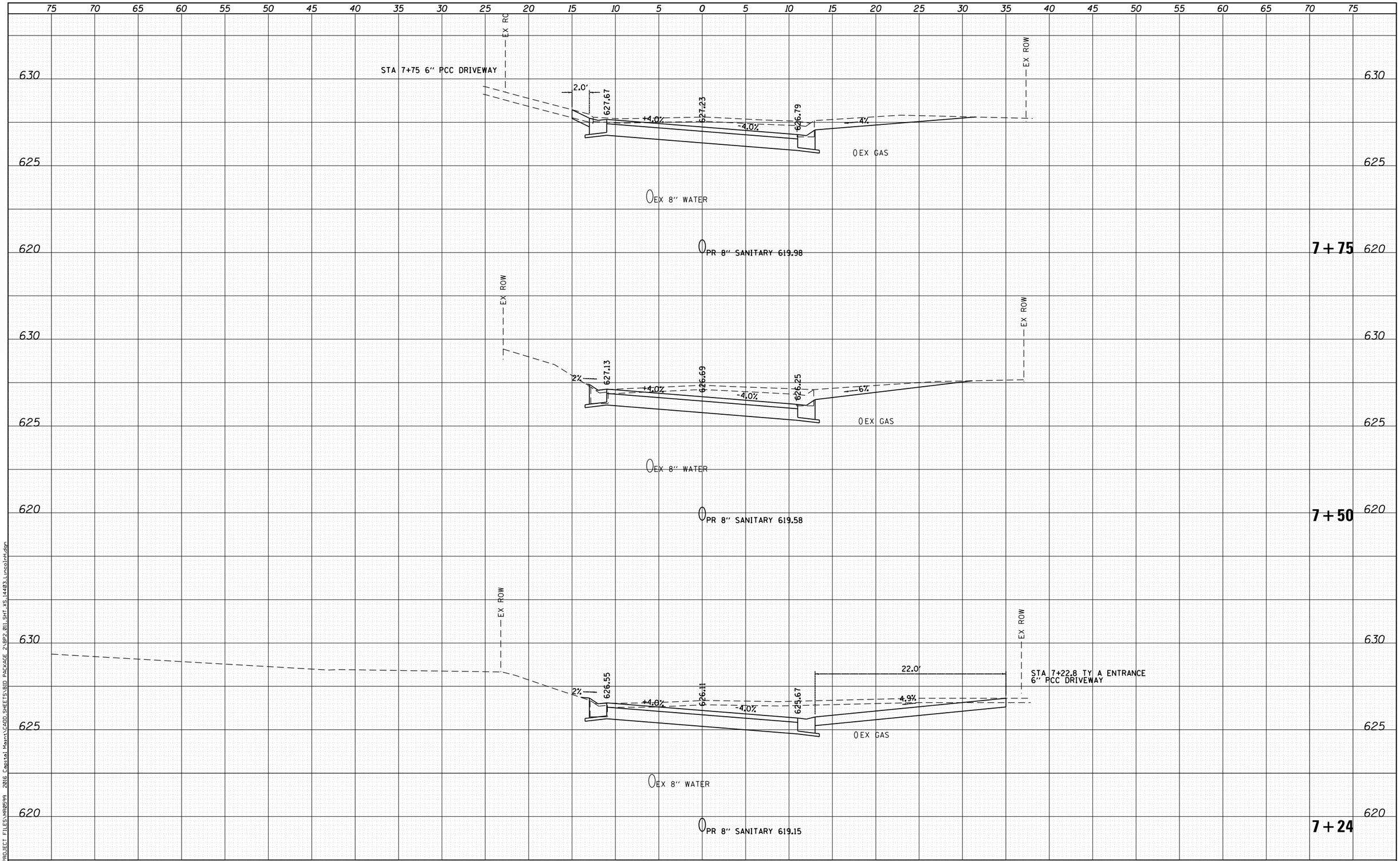

FINAL SURVEY	BY	DATE
SURVEYED		
PLOTTED		
TEMPLATE		
AREAS		
AREAS CHECKED		
NOTE BOOK		
NO.		

ORIGINAL SURVEY	BY	DATE
SURVEYED		
PLOTTED		
TEMPLATE		
AREAS		
AREAS CHECKED		
NOTE BOOK		
NO.		

FILE NAME = F:\PROJECT FILES\MR0599 2016 Capital Maint\CADD\SHEETS\BID PACKAGE 2\BP2_01L\SHT_XS_14403_LincolnHill.dgn

CITY OF QUINCY UTILITIES & ENGINEERING

USER NAME = sbange	DESIGNED -	REVISED -
	DRAWN -	REVISED -
PLOT SCALE = 10.0000 ' / in.	CHECKED -	REVISED -
PLOT DATE = 9/1/2016	DATE -	REVISED -

CITY OF QUINCY, ILLINOIS
2016 CAPITAL MAINTENANCE PROGRAM
WARDS 4 AND 7

LINCOLN HILL NORTHWEST
CROSS SECTIONS

SCALE: | SHEET NO. 3 OF 13 SHEETS | STA. 7+24 TO STA. 7+75

CITY OF QUINCY PROJECT NO. MR-599B	TOTAL SHEETS	SHEET NO.
JOB NO. 14403	44	13

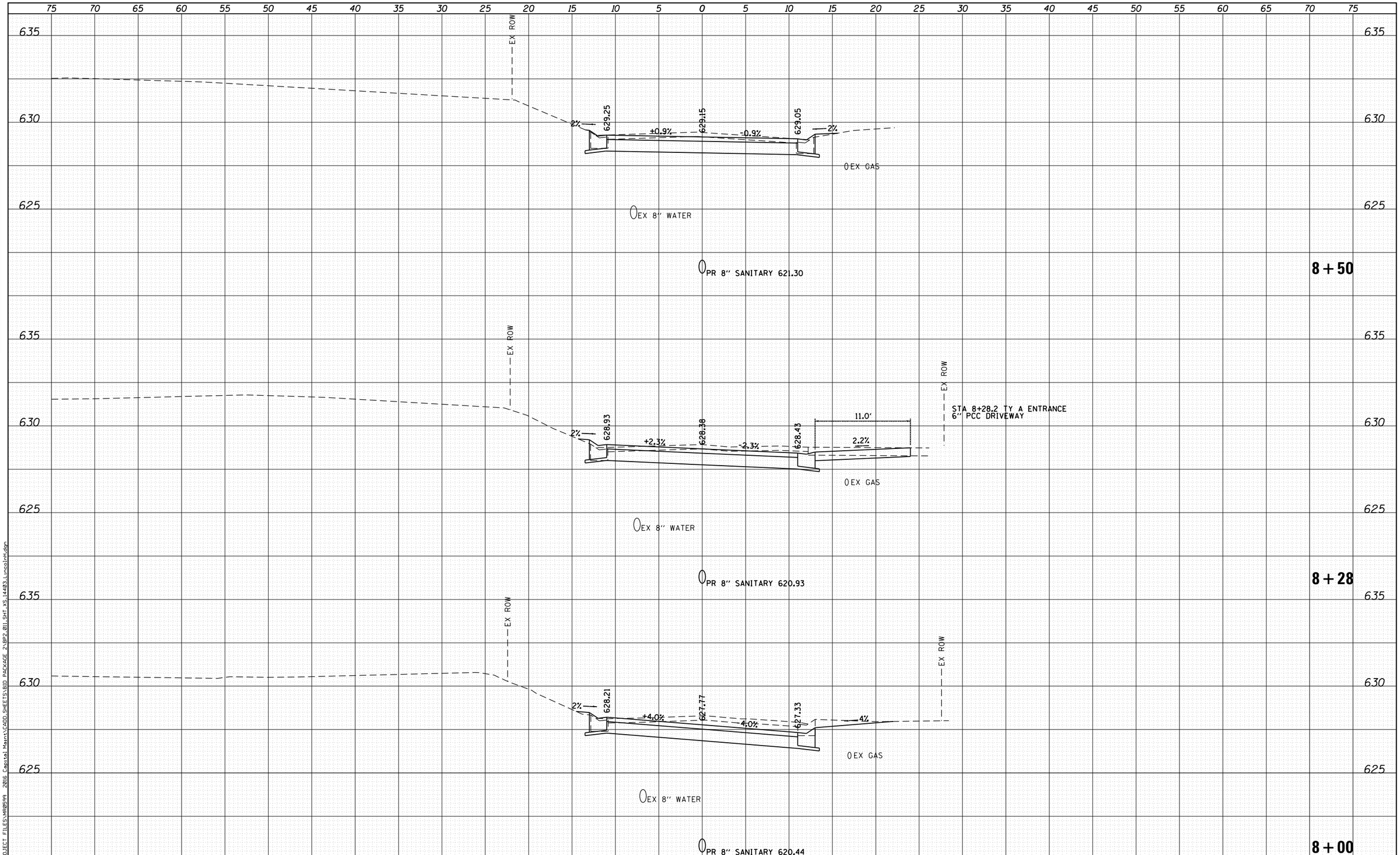

FINAL SURVEY	BY	DATE
SURVEYED		
PLOTTED		
TEMPLATE		
AREAS		
AREAS CHECKED		
NOTE BOOK		
NO.		

ORIGINAL SURVEY	BY	DATE
SURVEYED		
PLOTTED		
TEMPLATE		
AREAS		
AREAS CHECKED		
NOTE BOOK		
NO.		

FILE NAME = F:\PROJECT FILES\MR0599 2016 Capital Maint\CADD SHEETS\BID PACKAGE 2\BP2_011_SHT_XS_14403_Lincolnhill.dgn

CITY OF QUINCY UTILITIES & ENGINEERING

USER NAME = sbange	DESIGNED -	REVISED -
	DRAWN -	REVISED -
PLOT SCALE = 10.0000 ' / in.	CHECKED -	REVISED -
PLOT DATE = 9/1/2016	DATE -	REVISED -

CITY OF QUINCY, ILLINOIS
2016 CAPITAL MAINTENANCE PROGRAM
WARDS 4 AND 7

LINCOLN HILL NORTHWEST
CROSS SECTIONS

SCALE: | SHEET NO. 4 OF 13 SHEETS | STA. 8+00 TO STA. 8+50

CITY OF QUINCY PROJECT NO. MR-599B	TOTAL SHEETS	SHEET NO.
JOB NO. 14403	44	14

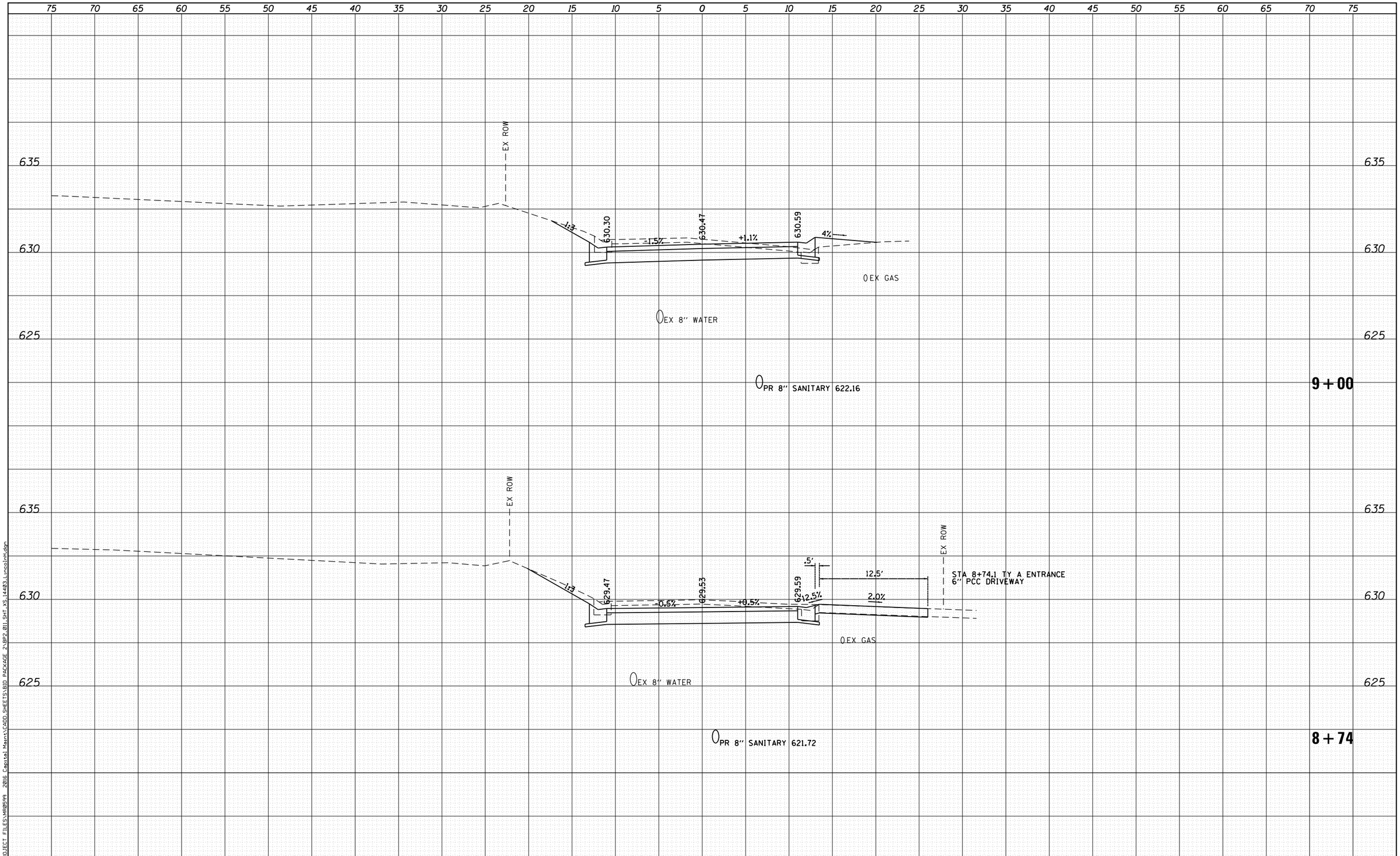

FINAL SURVEY	BY	DATE
SURVEYED		
PLOTTED		
TEMPLATE		
AREAS		
AREAS CHECKED		
NOTE BOOK NO.		

ORIGINAL SURVEY	BY	DATE
SURVEYED		
PLOTTED		
TEMPLATE		
AREAS		
AREAS CHECKED		
NOTE BOOK NO.		

FILE NAME = F:\PROJECT FILES\MR0599 2016 Capital Maint\CADD\SHEETS\BID PACKAGE 2\BP2_011_SHT_XS_14403_Lincolnhdgn

CITY OF QUINCY UTILITIES & ENGINEERING	USER NAME = sbange	DESIGNED -	REVISED -
		DRAWN -	REVISED -
	PLOT SCALE = 10.0000 ' / in.	CHECKED -	REVISED -
	PLOT DATE = 9/1/2016	DATE -	REVISED -

CITY OF QUINCY, ILLINOIS
2016 CAPITAL MAINTENANCE PROGRAM
WARDS 4 AND 7

LINCOLN HILL NORTHWEST
CROSS SECTIONS

SCALE: | SHEET NO. 5 OF 13 SHEETS | STA. 8+74 TO STA. 9+00

CITY OF QUINCY PROJECT NO. MR-599B	TOTAL SHEETS	SHEET NO.
JOB NO. 14403	44	15

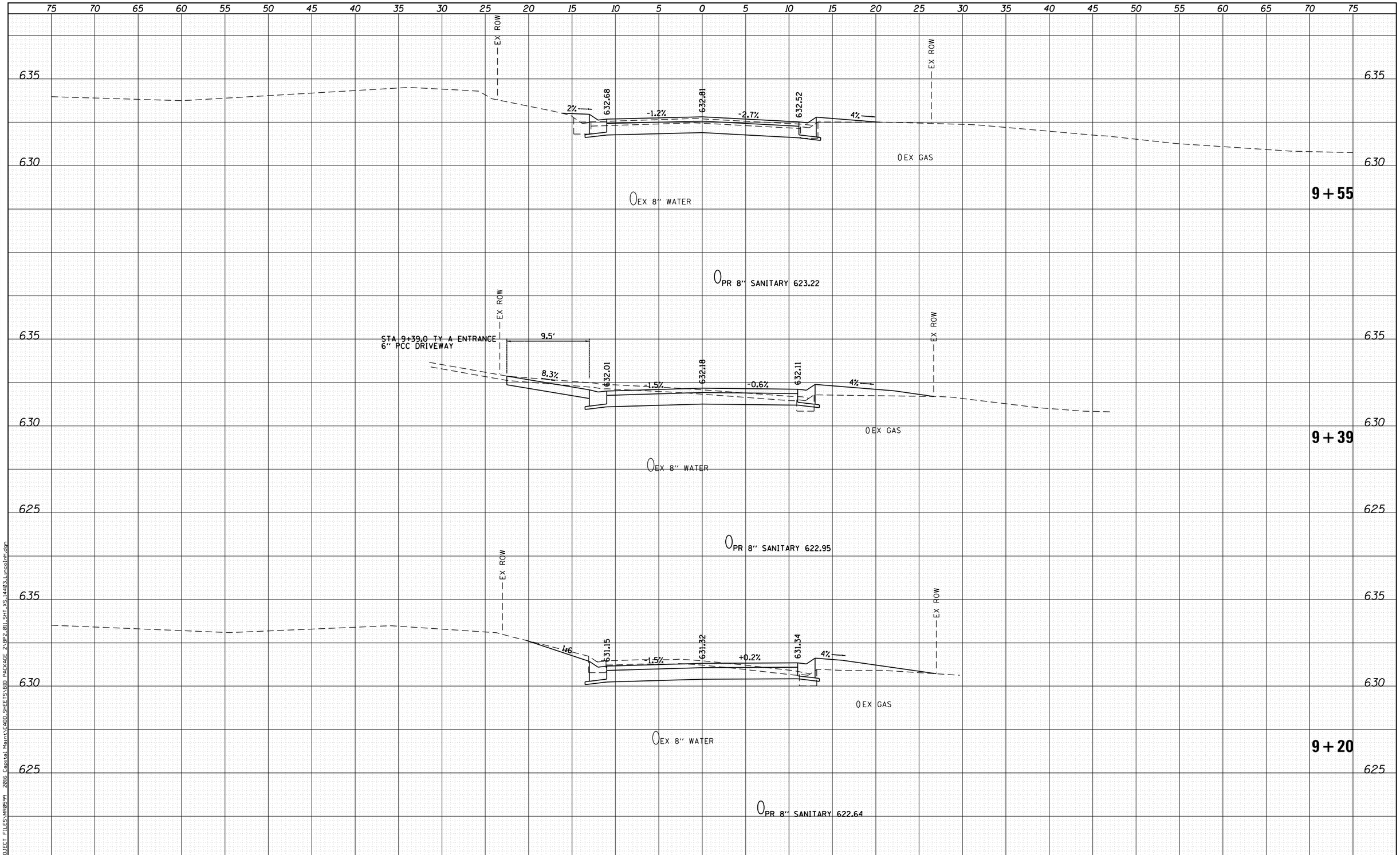

FINAL SURVEY		BY	DATE
NOTE BOOK	SURVEYED		
	PLOTTED		
	TEMPLATE		
	AREAS		
NO.	AREAS CHECKED		

ORIGINAL SURVEY		BY	DATE
NOTE BOOK	SURVEYED		
	PLOTTED		
	TEMPLATE		
	AREAS		
NO.	AREAS CHECKED		

FILE NAME = F:\PROJECT FILES\MR0599 2016 Capital Maint\CADD SHEETS\BID PACKAGE 2\BP2_011_SHT_XS_14403_Lincolnhl.dgn

CITY OF QUINCY UTILITIES & ENGINEERING

USER NAME = sbange	DESIGNED -	REVISED -
	DRAWN -	REVISED -
PLOT SCALE = 10.0000 ' / in.	CHECKED -	REVISED -
PLOT DATE = 9/1/2016	DATE -	REVISED -

CITY OF QUINCY, ILLINOIS
2016 CAPITAL MAINTENANCE PROGRAM
WARDS 4 AND 7

LINCOLN HILL NORTHWEST
CROSS SECTIONS

SCALE: | SHEET NO. 6 OF 13 SHEETS | STA. 9+20 TO STA. 9+55

CITY OF QUINCY PROJECT NO. MR-599B	TOTAL SHEETS	SHEET NO.
JOB NO. 14403	44	16

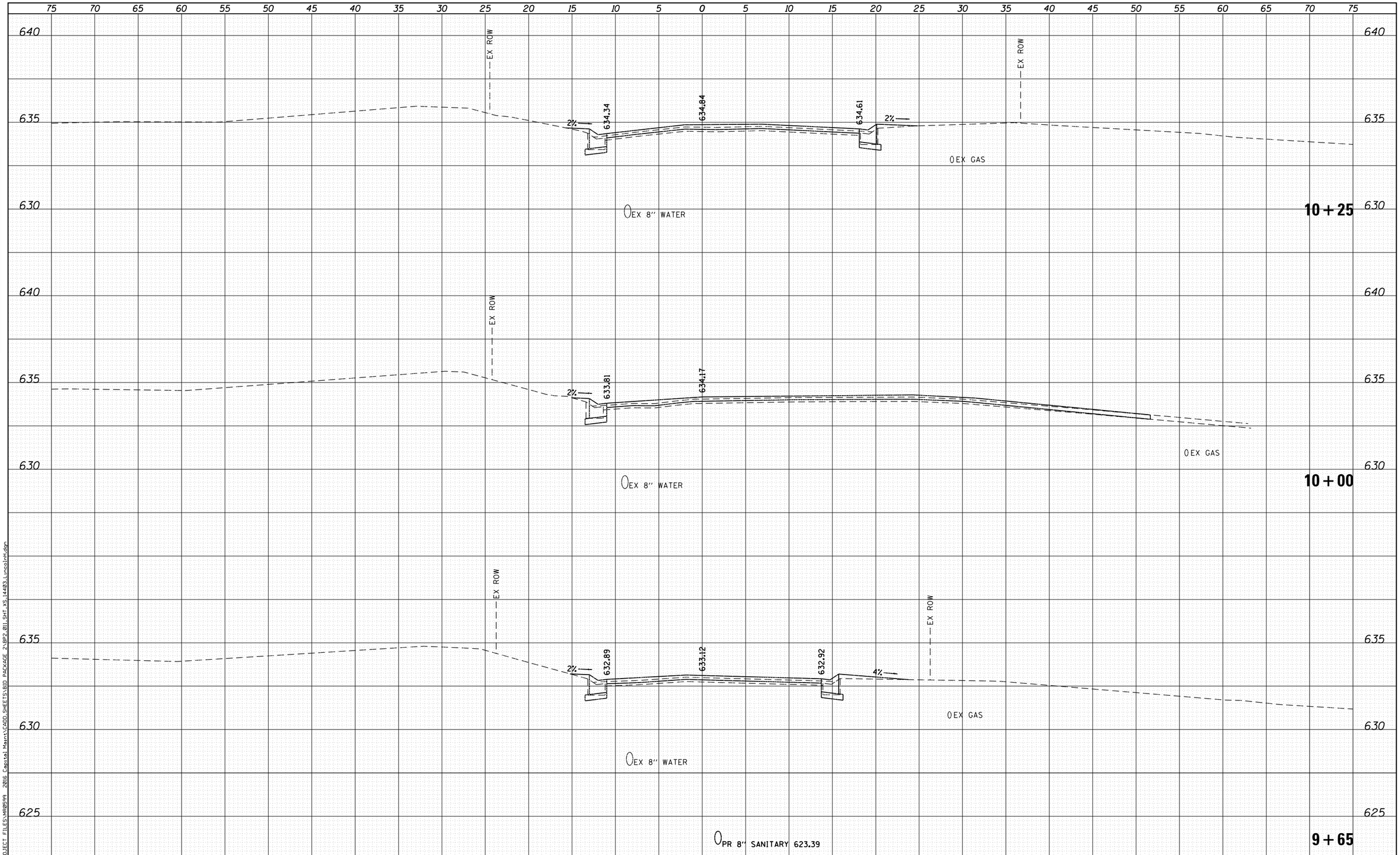

FINAL SURVEY	BY	DATE
SURVEYED		
PLOTTED		
TEMPLATE		
AREAS		
AREAS CHECKED		
NOTE BOOK		
NO.		

ORIGINAL SURVEY	BY	DATE
SURVEYED		
PLOTTED		
TEMPLATE		
AREAS		
AREAS CHECKED		
NOTE BOOK		
NO.		

FILE NAME = F:\PROJECT FILES\MR0599 2016 Capital Maint\CADD SHEETS\BID PACKAGE 2\BP2.01.SHT.XS.14403.Lincolnhl.dgn

CITY OF QUINCY UTILITIES & ENGINEERING

USER NAME = sbange	DESIGNED -	REVISED	-9/7/16 SEB - eop elev
	DRAWN -	REVISED	-
PLOT SCALE = 10.0000 ' / in.	CHECKED -	REVISED	-
PLOT DATE = 9/7/2016	DATE -	REVISED	-

CITY OF QUINCY, ILLINOIS
2016 CAPITAL MAINTENANCE PROGRAM
WARDS 4 AND 7

LINCOLN HILL NORTHWEST
CROSS SECTIONS

SCALE: | SHEET NO. 7 OF 13 SHEETS | STA. 9+65 TO STA. 10+25

CITY OF QUINCY PROJECT NO. MR-599B	TOTAL SHEETS	SHEET NO.
JOB NO. 14403	44	17

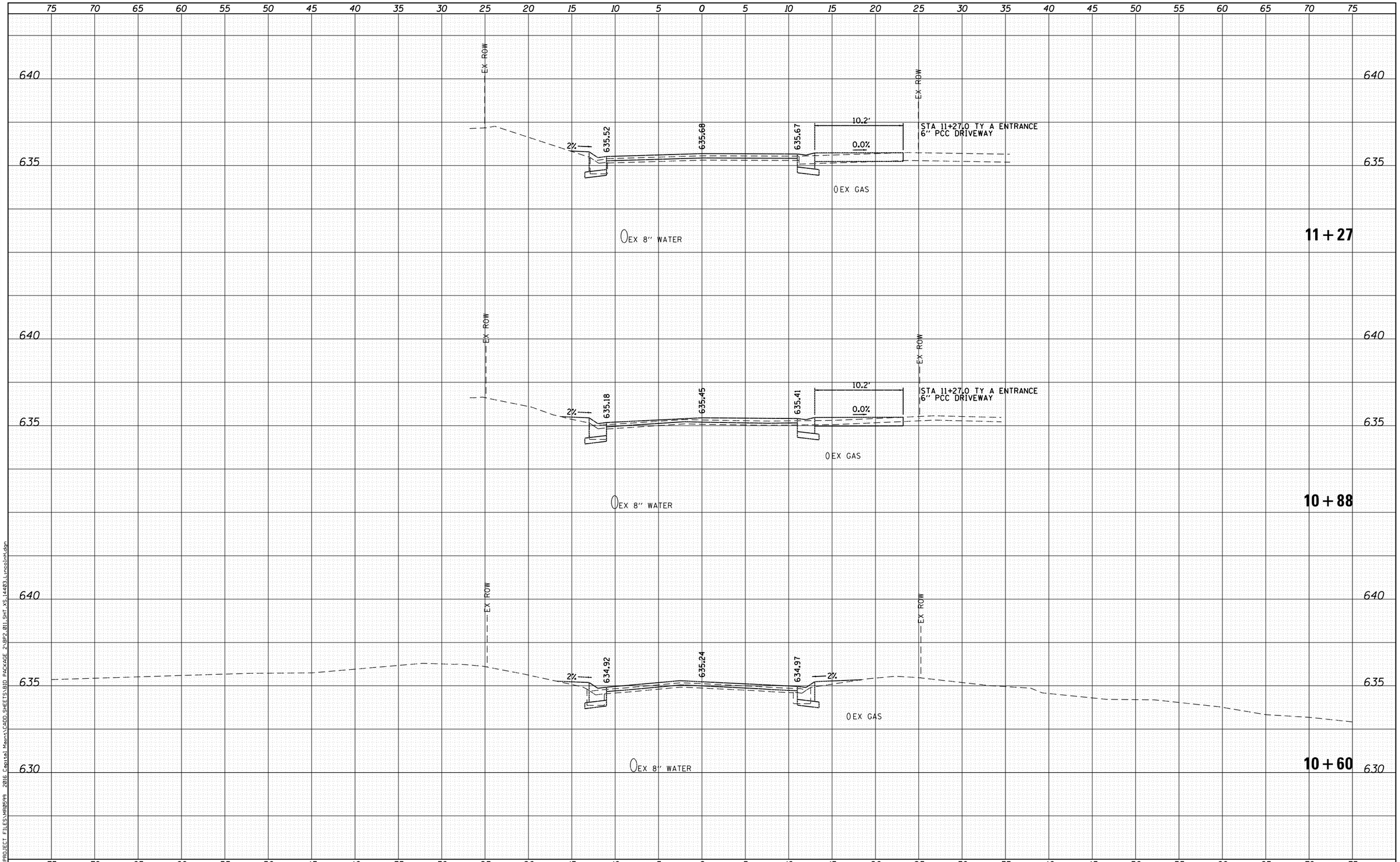

FINAL SURVEY	BY	DATE
SURVEYED		
PLOTTED		
TEMPLATE		
AREAS		
AREAS CHECKED		
NOTE BOOK		
NO.		

ORIGINAL SURVEY	BY	DATE
SURVEYED		
PLOTTED		
TEMPLATE		
AREAS		
AREAS CHECKED		
NOTE BOOK		
NO.		

FILE NAME = F:\PROJECT FILES\MR0599 2016 Capital Maint\CADD\SHEETS\BID PACKAGE 2\BP2_011_SHT_XS_14403_Lincolnhdgn

CITY OF QUINCY UTILITIES & ENGINEERING

USER NAME = sbange	DESIGNED -	REVISED	-9/7/16 SEB - eop elev
	DRAWN -	REVISED	-
PLOT SCALE = 10.0000 ' / in.	CHECKED -	REVISED	-
PLOT DATE = 9/7/2016	DATE -	REVISED	-

CITY OF QUINCY, ILLINOIS
2016 CAPITAL MAINTENANCE PROGRAM
WARDS 4 AND 7

LINCOLN HILL NORTHWEST
CROSS SECTIONS

SCALE: | SHEET NO. 8 OF 13 SHEETS | STA. 10+60 TO STA. 11+27

CITY OF QUINCY PROJECT NO. MR-599B	TOTAL SHEETS	SHEET NO.
JOB NO. 14403	44	18

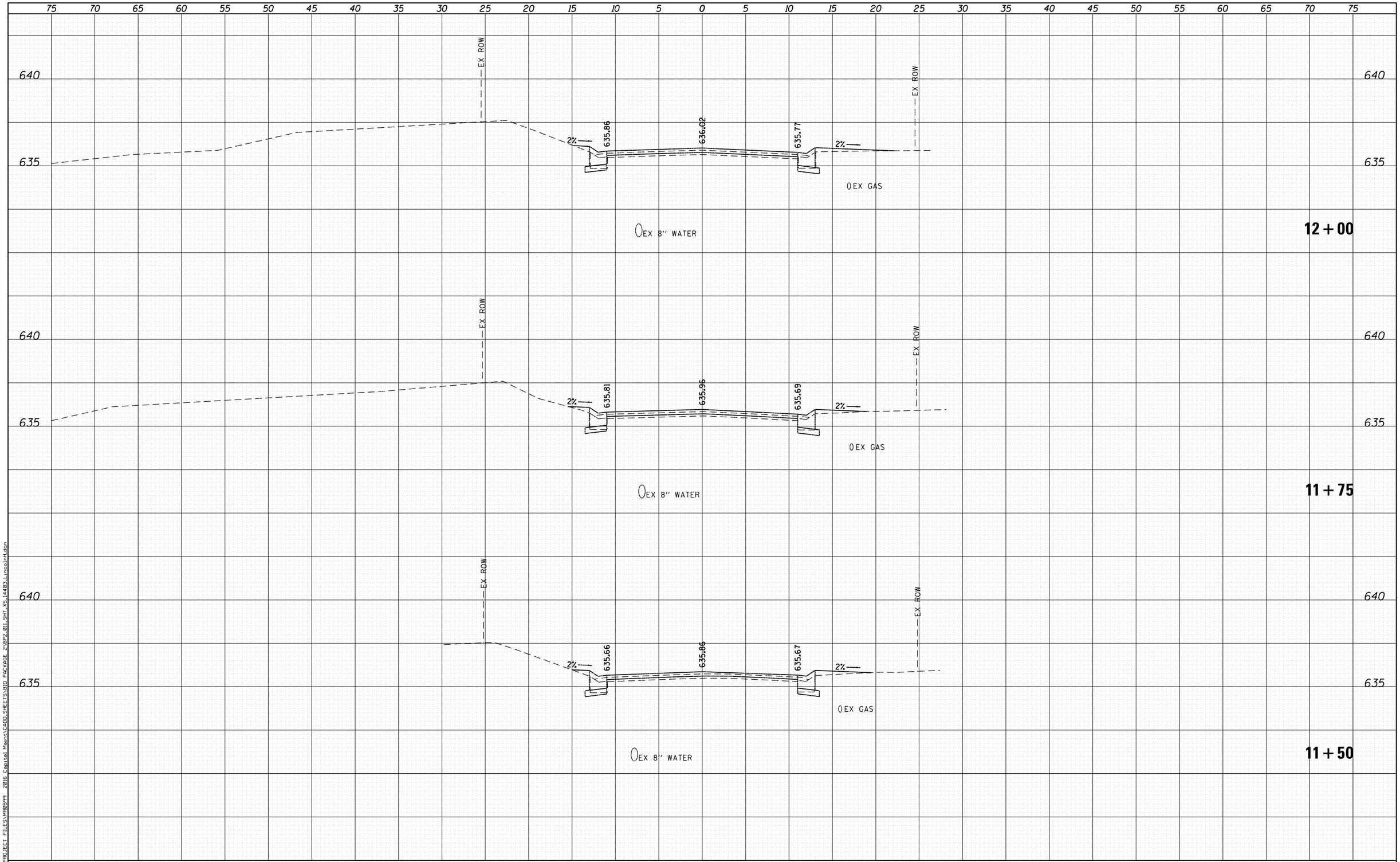

FINAL SURVEY		BY	DATE
NOTE BOOK	SURVEYED		
	PLOTTED		
	TEMPLATE		
	AREAS		
NO.	AREAS CHECKED		

ORIGINAL SURVEY		BY	DATE
NOTE BOOK	SURVEYED		
	PLOTTED		
	TEMPLATE		
	AREAS		
NO.	AREAS CHECKED		

FILE NAME = F:\PROJECT FILES\MR0599 2016 Capital Maint\CADD\SHEETS\BID PACKAGE 2\BP2_011_SHT_XS_14403_Lincolnhdgn

CITY OF QUINCY UTILITIES & ENGINEERING

USER NAME = sbange	DESIGNED -	REVISED	-9/7/16 SEB - eop elev
	DRAWN -	REVISED	-
PLOT SCALE = 10.0000 ' / in.	CHECKED -	REVISED	-
PLOT DATE = 9/7/2016	DATE -	REVISED	-

CITY OF QUINCY, ILLINOIS
2016 CAPITAL MAINTENANCE PROGRAM
WARDS 4 AND 7

LINCOLN HILL NORTHWEST
CROSS SECTIONS

SCALE: | SHEET NO. 9 OF 13 SHEETS | STA. 11+50 TO STA. 12+00

CITY OF QUINCY PROJECT NO. MR-599B	TOTAL SHEETS	SHEET NO.
JOB NO. 14403	44	19

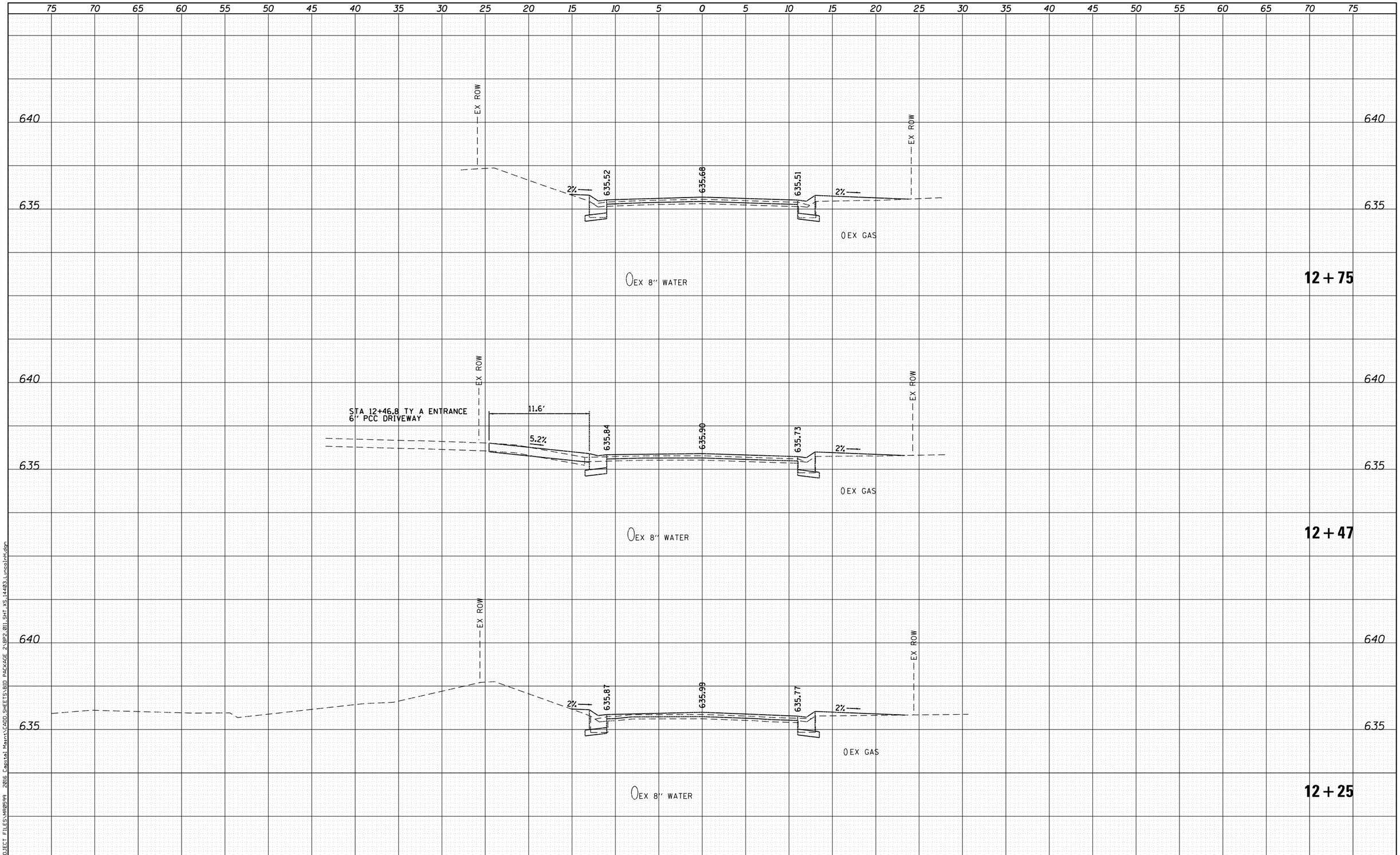

FINAL SURVEY	BY	DATE
SURVEYED		
PLOTTED		
TEMPLATE		
AREAS		
AREAS CHECKED		
NOTE BOOK		
NO.		

ORIGINAL SURVEY	BY	DATE
SURVEYED		
PLOTTED		
TEMPLATE		
AREAS		
AREAS CHECKED		
NOTE BOOK		
NO.		

FILE NAME = F:\PROJECT FILES\MR0599 2016 Capital Maint\CADD SHEETS\BID PACKAGE 2\BP2_011_SHT_XS_14403_LincolnHill.dgn

CITY OF QUINCY UTILITIES & ENGINEERING

USER NAME = sbange	DESIGNED -	REVISED	-9/7/16 SEB - eop elev
	DRAWN -	REVISED	-
PLOT SCALE = 10.0000 ' / in.	CHECKED -	REVISED	-
PLOT DATE = 9/7/2016	DATE -	REVISED	-

CITY OF QUINCY, ILLINOIS
2016 CAPITAL MAINTENANCE PROGRAM
WARDS 4 AND 7

LINCOLN HILL NORTHWEST
CROSS SECTIONS

SCALE: | SHEET NO. 10 OF 13 SHEETS | STA. 12+25 TO STA. 12+75

CITY OF QUINCY PROJECT NO. MR-599B	TOTAL SHEETS	SHEET NO.
JOB NO. 14403	44	20

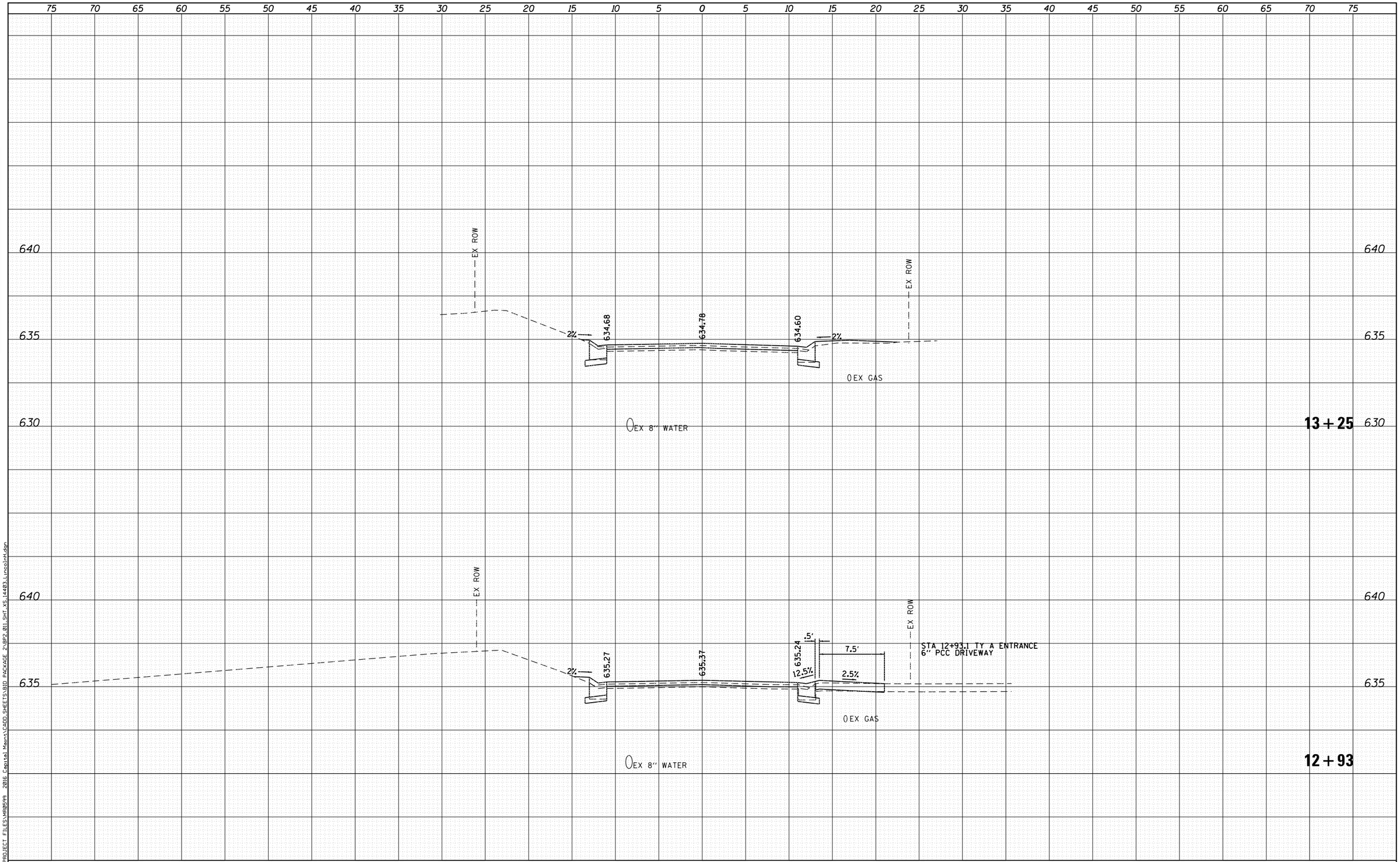

FINAL SURVEY		BY	DATE
	SURVEYED		
	PLOTTED		
	TEMPLATE		
NOTE BOOK	AREAS		
	AREAS CHECKED		
NO.			

ORIGINAL SURVEY		BY	DATE
	SURVEYED		
	PLOTTED		
	TEMPLATE		
NOTE BOOK	AREAS		
	AREAS CHECKED		
NO.			

FILE NAME = F:\PROJECT FILES\MR0599 2016 Capital Maint\CADD.SHEETS\BID PACKAGE 2\BP2.01L.SHT.XS.14403.Lincolnhdgn

CITY OF QUINCY UTILITIES & ENGINEERING

USER NAME = sbange	DESIGNED -	REVISED -9/7/16 SEB - eop elev
	DRAWN -	REVISED -
PLOT SCALE = 10.0000 ' / in.	CHECKED -	REVISED -
PLOT DATE = 9/7/2016	DATE -	REVISED -

CITY OF QUINCY, ILLINOIS
2016 CAPITAL MAINTENANCE PROGRAM
WARDS 4 AND 7

LINCOLN HILL NORTHWEST
CROSS SECTIONS

SCALE: | SHEET NO. 11 OF 13 SHEETS | STA. 12+93 TO STA. 13+25

CITY OF QUINCY PROJECT NO. MR-599B	TOTAL SHEETS	SHEET NO.
JOB NO. 14403	44	21

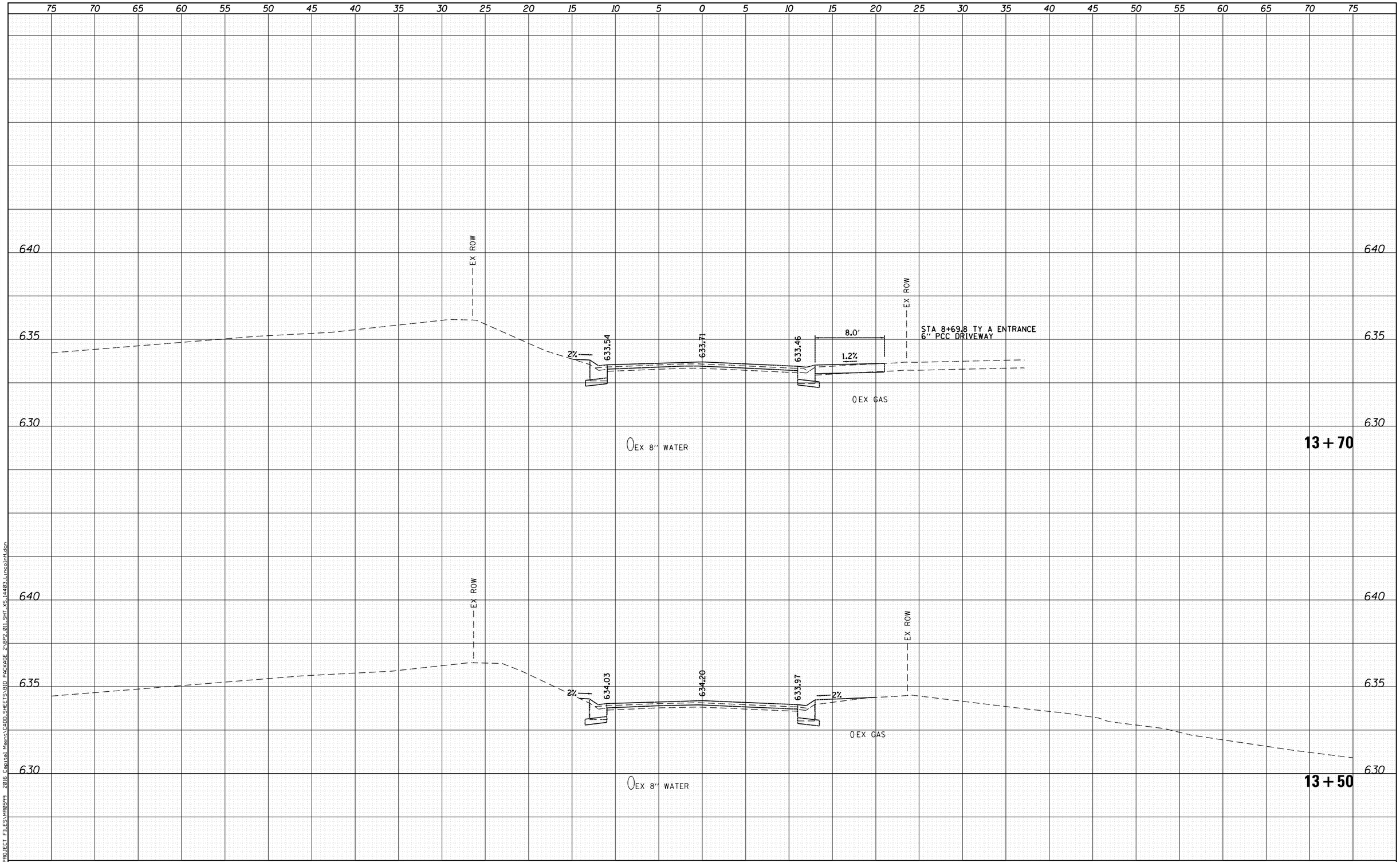

FINAL SURVEY	BY	DATE
SURVEYED		
PLOTTED		
TEMPLATE		
AREAS		
AREAS CHECKED		
NOTE BOOK		
NO.		

ORIGINAL SURVEY	BY	DATE
SURVEYED		
PLOTTED		
TEMPLATE		
AREAS		
AREAS CHECKED		
NOTE BOOK		
NO.		

FILE NAME = F:\PROJECT FILES\MR0599 2016 Capital Maint\CADD\SHEETS\BID PACKAGE 2\BP2_01L_SHT_XS_14403_Lincolnhdgn

CITY OF QUINCY UTILITIES & ENGINEERING	USER NAME = sbange	DESIGNED -	REVISED -9/7/16 SEB - eop elev	CITY OF QUINCY, ILLINOIS 2016 CAPITAL MAINTENANCE PROGRAM WARDS 4 AND 7
		DRAWN -	REVISED -	
	PLOT SCALE = 10.0000 ' / in.	CHECKED -	REVISED -	
	PLOT DATE = 9/7/2016	DATE -	REVISED -	

LINCOLN HILL NORTHWEST
CROSS SECTIONS

SCALE: | SHEET NO. 12 OF 13 SHEETS | STA. 13+50 TO STA. 13+70

CITY OF QUINCY PROJECT NO. MR-599B	TOTAL SHEETS	SHEET NO.
JOB NO. 14403	44	22

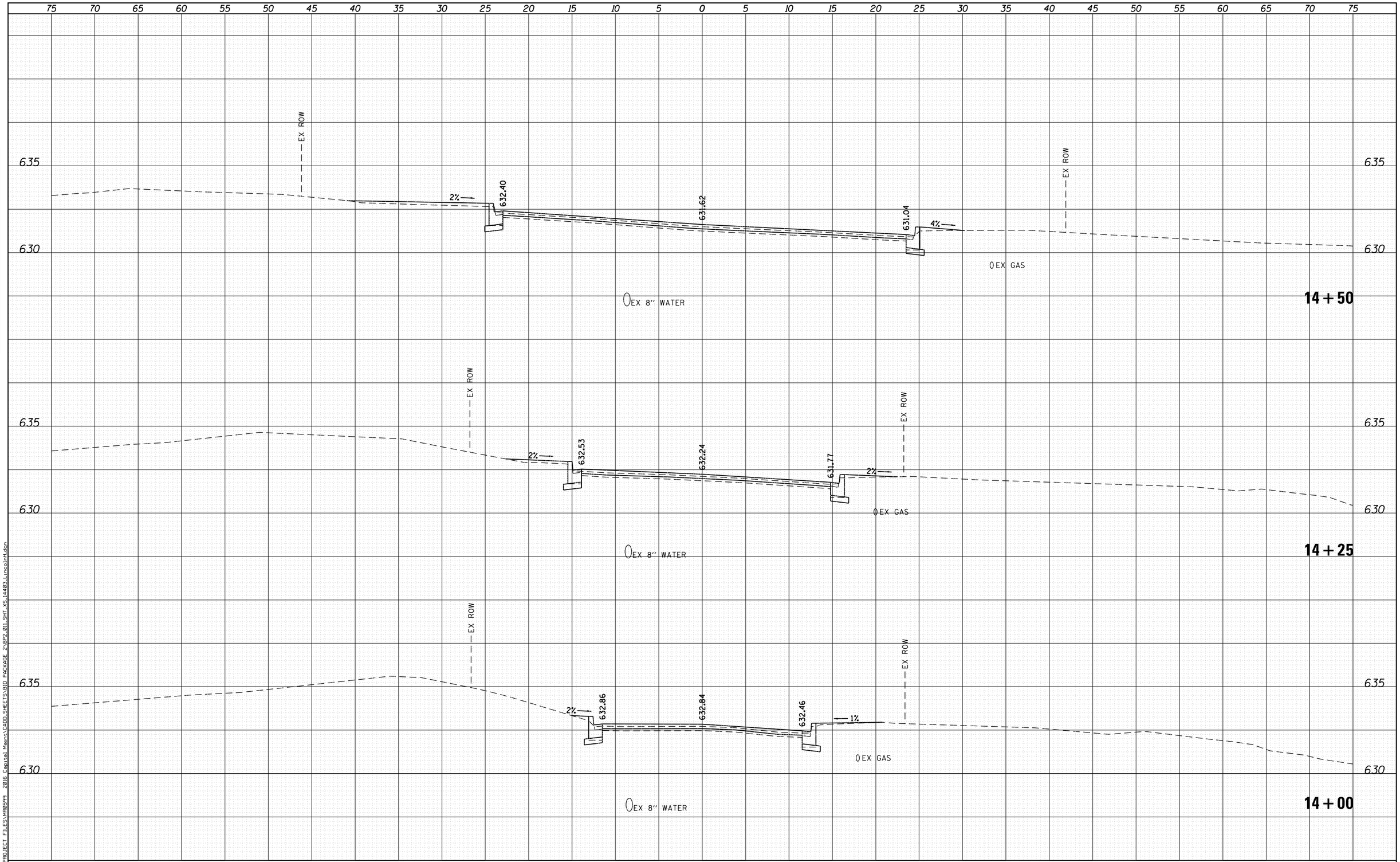

FINAL SURVEY	BY	DATE
SURVEYED		
PLOTTED		
TEMPLATE		
AREAS		
AREAS CHECKED		
NOTE BOOK NO.		

ORIGINAL SURVEY	BY	DATE
SURVEYED		
PLOTTED		
TEMPLATE		
AREAS		
AREAS CHECKED		
NOTE BOOK NO.		

FILE NAME = F:\PROJECT FILES\MR0599 2016 Capital Maint\CADD_SHEETS\BID PACKAGE 2\BP2.011.SHT_XS.14403.Lincolnhl.dgn

CITY OF QUINCY UTILITIES & ENGINEERING

USER NAME = sbange	DESIGNED -	REVISED	-9/7/16 SEB - eop elev
	DRAWN -	REVISED	-
PLOT SCALE = 10.0000 ' / in.	CHECKED -	REVISED	-
PLOT DATE = 9/7/2016	DATE -	REVISED	-

CITY OF QUINCY, ILLINOIS
2016 CAPITAL MAINTENANCE PROGRAM
WARDS 4 AND 7

LINCOLN HILL NORTHWEST
CROSS SECTIONS

SCALE: | SHEET NO. 13 OF 13 SHEETS | STA. 14+00 TO STA. 14+50

CITY OF QUINCY PROJECT NO. MR-599B	TOTAL SHEETS	SHEET NO.
JOB NO. 14403	44	23

PAVEMENT CROSS SLOPES

STATION	LT	RT
10+25	-2.7% *	-2.5% *
10+50	-2.0%	-2.0%
15+45	-2.0%	-2.0%
15+70	-3.2% *	-2.7% *
16+55	-4.1% *	-2.4% *
16+80		-2.0%
17+05	-2.0%	
19+35		-2.0%
19+50	-2.0%	
19+60	-1.8% *	-2.7% *

* - MATCH EXISTING

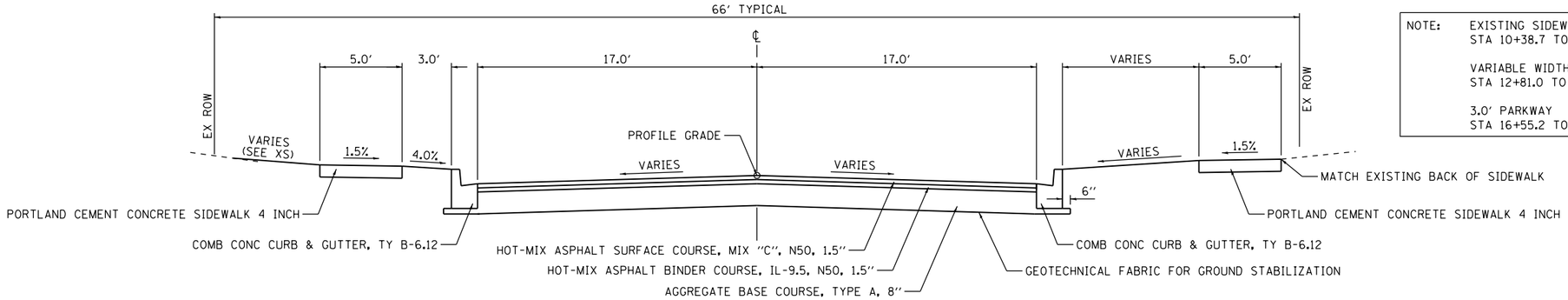

NOTE: EXISTING SIDEWALK TO REMAIN
STA 10+38.7 TO STA 12+81.0 RT

VARIABLE WIDTH PARKWAY (SHOWN)
STA 12+81.0 TO STA 15+70.6 RT

3.0' PARKWAY
STA 16+55.2 TO 19+60.0 RT

TYPICAL SECTION – OHIO STREET

STA 10+25.0 TO 15+70.2
STA 16+55.2 TO 19+60.0

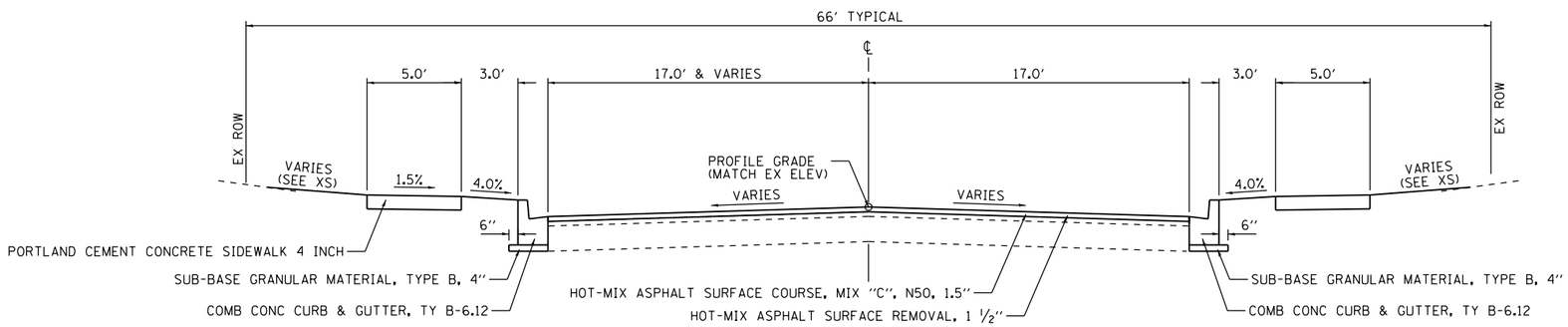

TYPICAL SECTION – OHIO STREET

STA 10+16.4 TO 10+25.0
STA 15+70.2 TO 16+55.2
STA 19+60.0 TO 19+70.6

9/7/16 SEB

ALIGNMENT CONTROL POINTS

POINT#	NORTHING	EASTING	OHIO ST. STATION	SOUTH 6TH ST. STATION	SOUTH 7TH ST. STATION	SOUTH 8TH ST. STATION
40	1,189,088.74	1,948,776.14	10+00.00	60+00.00	-	-
41	1,189,068.69	1,949,379.75	16+03.95	-	70+00.00	-
42	1,189,055.72	1,949,766.57	19+90.98	-	-	80+00.00
43	1,188,888.79	1,948,772.01	-	58+00.00	-	-
44	1,189,288.70	1,948,780.27	-	62+00.00	-	-
45	1,188,868.70	1,949,377.64	-	-	68+00.00	-
46	1,189,268.68	1,949,381.87	-	-	72+00.00	-
47	1,188,855.72	1,949,767.48	-	-	-	78+00.00
48	1,189,255.71	1,949,765.66	-	-	-	82+00.00

MIXTURE REQUIREMENTS

LOCATION(S)	OHIO ST.	OHIO ST.
MIXTURE USE(S)	SURFACE INCIDENTAL	BINDER
AC/PG	PG 64-22	PG 64-22
RAP % (MAX)	10%	25%
DESIGN AIR VOIDS	4% N50 DESIGN	4% N50 DESIGN
MIXTURE COMPOSITION (MIXTURE GRADATION)	IL 9.5 OR IL 12.5	IL 9.5
FRICTION AGGREGATE	MIX "C"	-

FILE NAME = F:\PROJECT FILES\MR0599 2016 Capital Maint\CADD SHEETS\BID PACKAGE 2-BP2.024.Sht TYP.14706.Ohio.dgn

CITY OF QUINCY UTILITIES & ENGINEERING

USER NAME = sbange	DESIGNED - SEB	REVISED - 9/7/16 SEB	
	DRAWN - SEB	REVISED -	
PLOT SCALE = 40.0000 ' / in.	CHECKED -	REVISED -	
PLOT DATE = 9/7/2016	DATE -	REVISED -	

CITY OF QUINCY, ILLINOIS
2016 CAPITAL MAINTENANCE PROGRAM
WARDS 4 AND 7

OHIO STREET – SOUTH 6TH TO SOUTH 8TH –
TYPICAL SECTIONS & ALIGNMENT INFORMATION

SCALE: NONE | SHEET NO. 1 OF 1 SHEETS | STA. TO STA.

CITY OF QUINCY PROJECT NO. MR-599B	TOTAL SHEETS	SHEET NO.
JOB NO. 14706	44	24

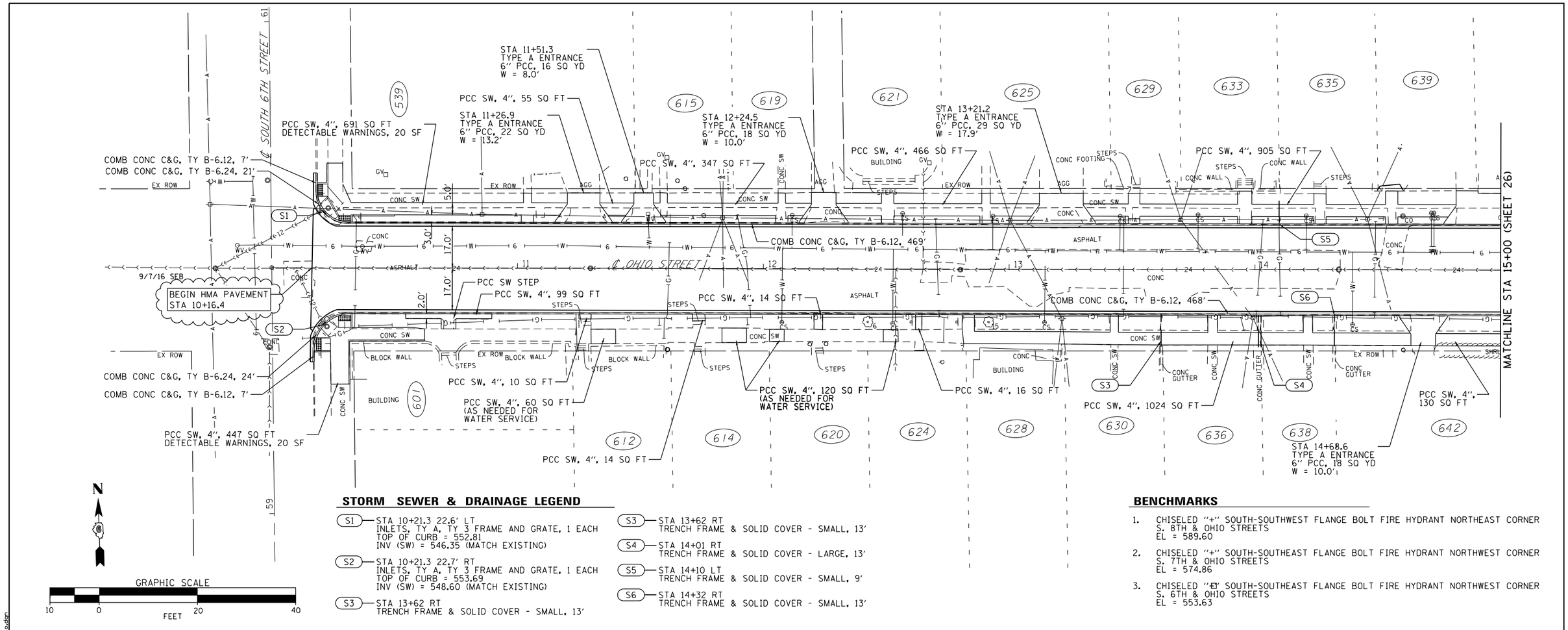

STORM SEWER & DRAINAGE LEGEND

- (S1) — STA 10+21.3 22.6' LT
  INLETS, TY A, TY 3 FRAME AND GRATE, 1 EACH
  TOP OF CURB = 552.81
  INV (SW) = 546.35 (MATCH EXISTING)
- (S2) — STA 10+21.3 22.7' RT
  INLETS, TY A, TY 3 FRAME AND GRATE, 1 EACH
  TOP OF CURB = 553.69
  INV (SW) = 548.60 (MATCH EXISTING)
- (S3) — STA 13+62 RT
  TRENCH FRAME & SOLID COVER - SMALL, 13'
- (S3) — STA 13+62 RT
  TRENCH FRAME & SOLID COVER - SMALL, 13'
- (S4) — STA 14+01 RT
  TRENCH FRAME & SOLID COVER - LARGE, 13'
- (S5) — STA 14+10 LT
  TRENCH FRAME & SOLID COVER - SMALL, 9'
- (S6) — STA 14+32 RT
  TRENCH FRAME & SOLID COVER - SMALL, 13'

BENCHMARKS

1. CHISELED "+" SOUTH-SOUTHWEST FLANGE BOLT FIRE HYDRANT NORTHEAST CORNER
   S. 8TH & OHIO STREETS
   EL = 589.60
2. CHISELED "+" SOUTH-SOUTHEAST FLANGE BOLT FIRE HYDRANT NORTHWEST CORNER
   S. 7TH & OHIO STREETS
   EL = 574.86
3. CHISELED "+" SOUTH-SOUTHEAST FLANGE BOLT FIRE HYDRANT NORTHWEST CORNER
   S. 6TH & OHIO STREETS
   EL = 553.63

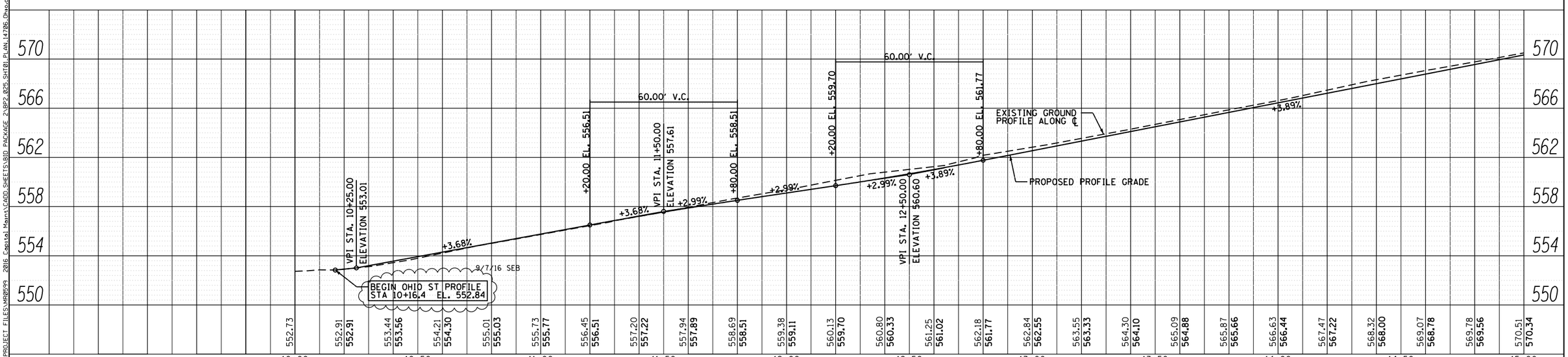

PLAN	BY	DATE
SURVEYED		
PLOTTED		
ALIGNMENT CHECKED		
RT. OF WAY CHECKED		
CADD FILE NAME		
NOTE BOOK NO.		

PROFILE	BY	DATE
SURVEYED		
PLOTTED		
GRADES CHECKED		
BM. NOTED		
STRUCTURE NOTATNS CHKD		
NOTE BOOK NO.		

FILE NAME = F:\PROJECT FILES\MR0599 2016 Capital Maint\CADD_SHEETS\BID PACKAGE 2\BP2.025.SH101.PLAN.14706.Ohio.dgn

CITY OF QUINCY UTILITIES & ENGINEERING	USER NAME = sbange	DESIGNED -	REVISED - 9/7/16 SEB
		DRAWN -	REVISED -
	PLOT SCALE = 40.0000 ' / in.	CHECKED -	REVISED -
	PLOT DATE = 9/7/2016	DATE -	REVISED -

CITY OF QUINCY, ILLINOIS
2016 CAPITAL MAINTENANCE PROGRAM
WARDS 4 AND 7

OHIO STREET – SOUTH 6TH TO SOUTH 8TH
PLAN AND PROFILE

SCALE: 1"=20' (FS) | SHEET NO. 1 OF 2 SHEETS | STA. 10+00 TO STA. 15+00

CITY OF QUINCY PROJECT NO. MR-599B	TOTAL SHEETS	SHEET NO.
JOB NO. 14706	44	25

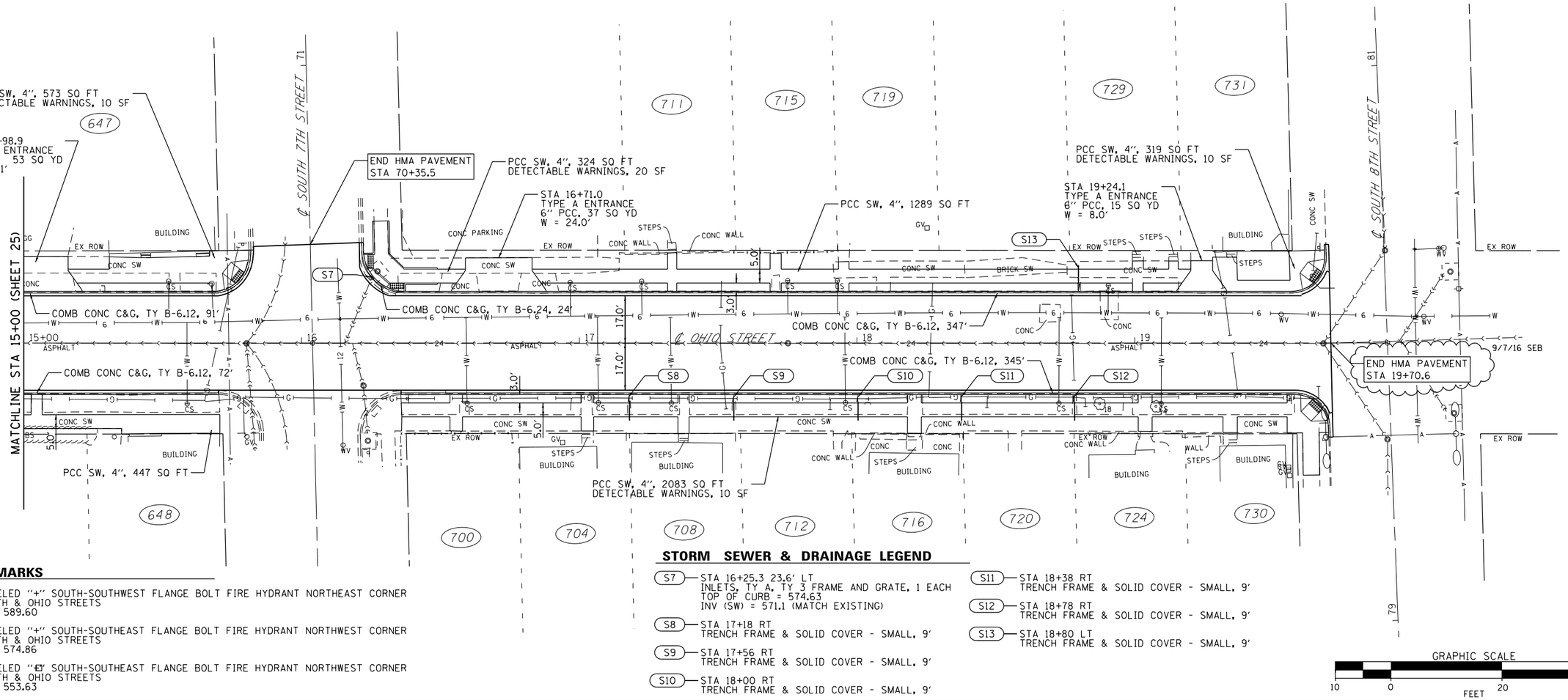

BENCHMARKS

1. CHISELED "+" SOUTH-SOUTHWEST FLANGE BOLT FIRE HYDRANT NORTHEAST CORNER
   S. 8TH & OHIO STREETS
   EL = 589.60
2. CHISELED "+" SOUTH-SOUTHEAST FLANGE BOLT FIRE HYDRANT NORTHWEST CORNER
   S. 7TH & OHIO STREETS
   EL = 574.86
3. CHISELED "+" SOUTH-SOUTHEAST FLANGE BOLT FIRE HYDRANT NORTHWEST CORNER
   S. 6TH & OHIO STREETS
   EL = 553.63

STORM SEWER & DRAINAGE LEGEND

- S7 — STA 16+25.3 23.6' LT
  INLETS, TY A, TY 3 FRAME AND GRATE, 1 EACH
  TOP OF CURB = 574.63
  INV (SW) = 571.1 (MATCH EXISTING)
- S8 — STA 17+18 RT
  TRENCH FRAME & SOLID COVER - SMALL, 9'
- S9 — STA 17+56 RT
  TRENCH FRAME & SOLID COVER - SMALL, 9'
- S10 — STA 18+00 RT
  TRENCH FRAME & SOLID COVER - SMALL, 9'
- S11 — STA 18+38 RT
  TRENCH FRAME & SOLID COVER - SMALL, 9'
- S12 — STA 18+78 RT
  TRENCH FRAME & SOLID COVER - SMALL, 9'
- S13 — STA 18+80 LT
  TRENCH FRAME & SOLID COVER - SMALL, 9'

GRAPHIC SCALE
10 0 20 40
FEET

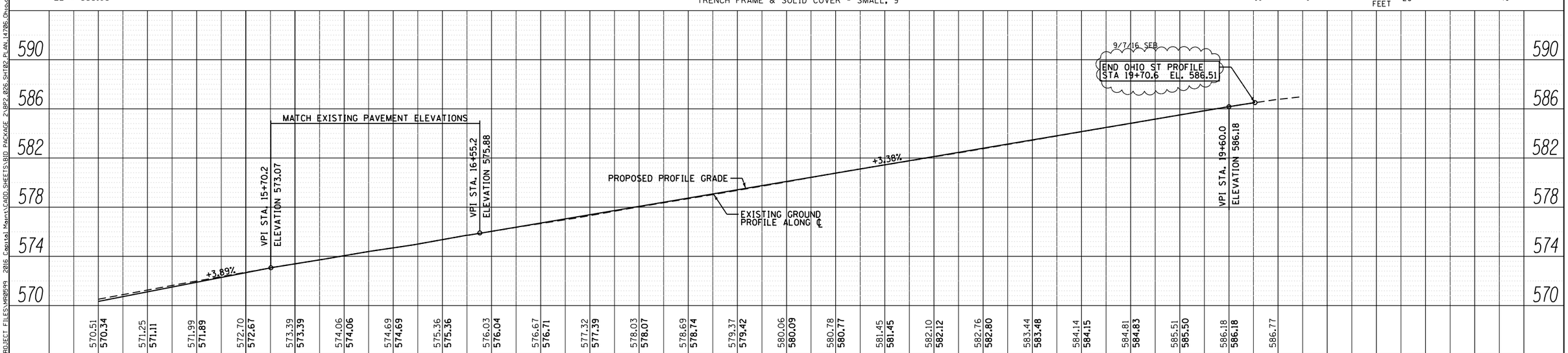

CITY OF QUINCY UTILITIES & ENGINEERING	USER NAME = sbange	DESIGNED -	REVISED - 9/7/16 SEB
		DRAWN -	REVISED -
	PLOT SCALE = 40.0000 ' / in.	CHECKED -	REVISED -
	PLOT DATE = 9/7/2016	DATE -	REVISED -

CITY OF QUINCY, ILLINOIS
2016 CAPITAL MAINTENANCE PROGRAM
WARDS 4 AND 7

OHIO STREET – SOUTH 6TH TO SOUTH 8TH
PLAN AND PROFILE

SCALE: 1"=20' (FS) | SHEET NO. 2 OF 2 SHEETS | STA. 15+00 TO STA. 20+00

CITY OF QUINCY PROJECT NO. MR-599B	TOTAL SHEETS	SHEET NO.
JOB NO. 14706	44	26

PLAN: SURVEYED / PLOTTED / ALIGNMENT CHECKED / RT. OF WAY CHECKED / CADD FILE NAME / NOTE BOOK NO. / BY / DATE

PROFILE: SURVEYED / PLOTTED / GRADES CHECKED / B.M. NOTED / STRUCTURE NOTATIONS CHKD / NOTE BOOK NO. / BY / DATE

FILE NAME = F:\PROJECT FILES\MR0599 2016 Capital Maint\CADD\SHEETS\810 PACKAGE 2\BP2.026.SH102.PLAN.14706.Ohioadan

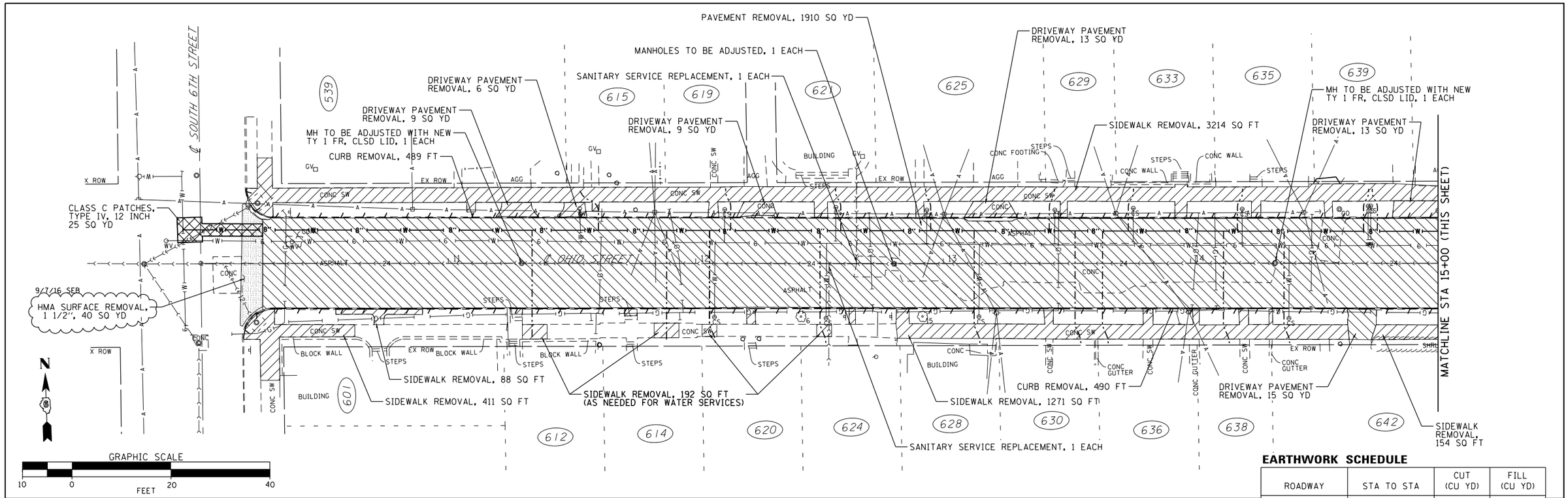

EARTHWORK SCHEDULE

ROADWAY	STA TO STA	CUT (CU YD)	FILL (CU YD)
OHIO ST	10+25 TO 16+00	489	28
	16+00 TO 19+60	240	23
TOTALS		729	51

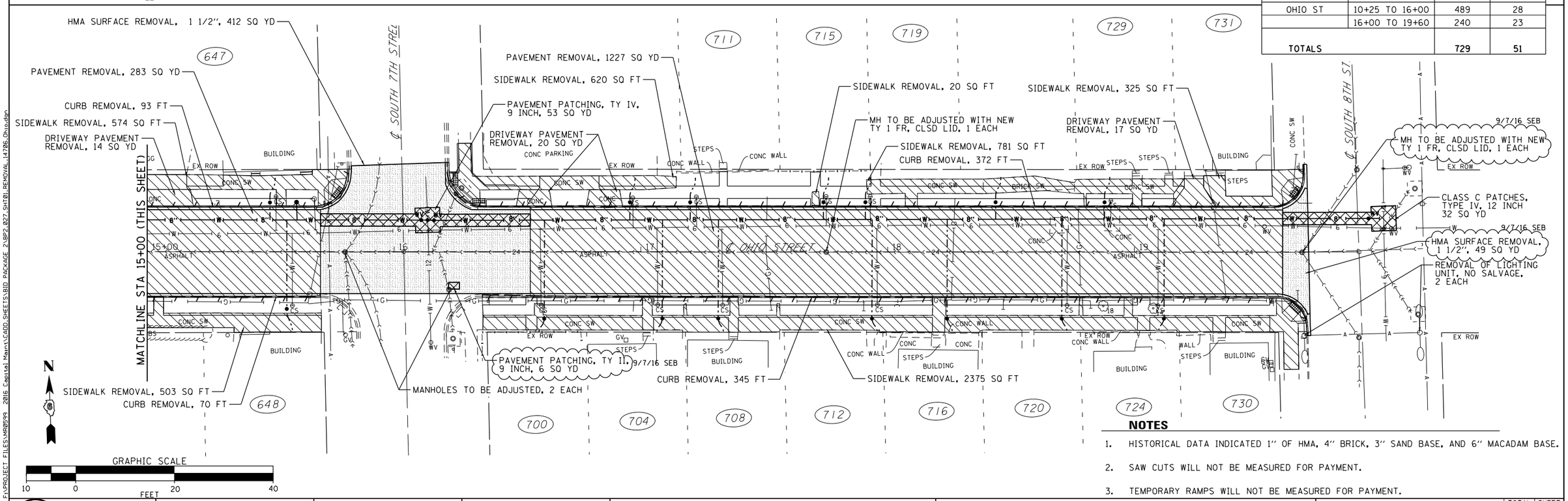

NOTES

1. HISTORICAL DATA INDICATED 1" OF HMA, 4" BRICK, 3" SAND BASE, AND 6" MACADAM BASE.
2. SAW CUTS WILL NOT BE MEASURED FOR PAYMENT.
3. TEMPORARY RAMPS WILL NOT BE MEASURED FOR PAYMENT.

FILE NAME = F:\PROJECT FILES\MR0599 2016 Capital Main\CADD SHEETS\BID PACKAGE 2\BP2_027_SHT01_REMOVAL_14706_Ohio.dgn

CITY OF QUINCY UTILITIES & ENGINEERING

USER NAME = sbange	DESIGNED -	REVISED - 9/7/16 SEB	
	DRAWN -	REVISED -	
PLOT SCALE = 40.0000 ' / in.	CHECKED -	REVISED -	
PLOT DATE = 9/7/2016	DATE -	REVISED -	

CITY OF QUINCY, ILLINOIS
2016 CAPITAL MAINTENANCE PROGRAM
WARDS 4 AND 7

OHIO STREET – SOUTH 6TH TO SOUTH 8TH
REMOVAL PLAN

SCALE: 1"=20' (FS) | SHEET NO. 1 OF 1 SHEETS | STA. 10+00 TO STA. 20+00

CITY OF QUINCY PROJECT NO. MR-599B	TOTAL SHEETS	SHEET NO.
JOB NO. 14706	44	27

LEGEND

- DETECTABLE WARNINGS
- SIDE CURB
- RAMP SIDE FLARE

SEE HIGHWAY STANDARDS 424001 AND 424006 FOR CURB RAMP DETAILS NOT SHOWN

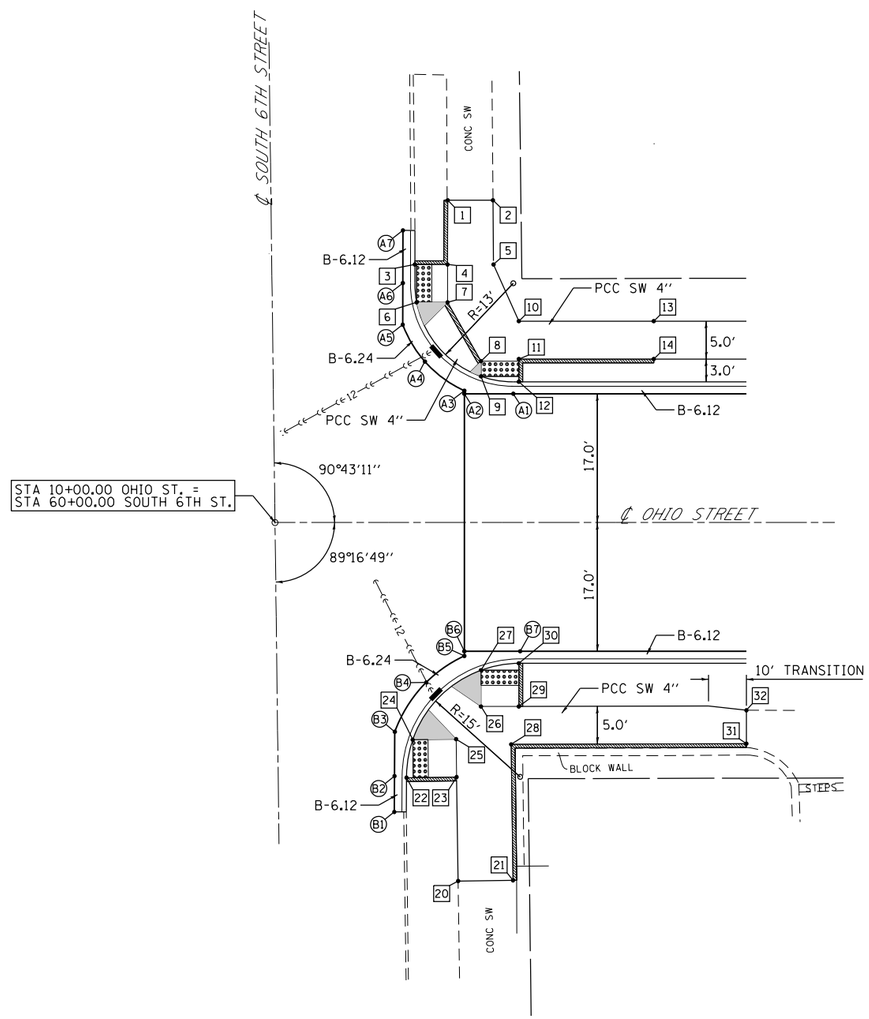

EDGE OF PAVEMENT ELEVATIONS

POINT#	OHIO STREET STATION	OHIO STREET OFFSET	SOUTH 6TH STREET STATION	SOUTH 6TH STREET OFFSET	ELEVATION
A1	10+31.46	17.00' LT	60+16.60	31.67' RT	552.67
A2	10+25.00	17.00' LT	60+16.68	25.21' RT	552.56•
A3	10+25.00	17.40' LT	60+17.08	25.22' RT	552.54•
A4	10+19.79	21.26' LT	60+21.01	20.05' RT	552.43•
A5	10+16.87	26.12' LT	60+25.90	17.19' RT	552.38•
A6	10+16.88	31.61' LT	60+31.39	17.27' RT	552.29•
A7	10+16.89	38.56' LT	60+38.35	17.38' RT	552.12•

• - MATCH EXISTING

SIDEWALK ELEVATIONS

POINT#	OHIO STREET STATION	OHIO STREET OFFSET	SOUTH 6TH STREET STATION	SOUTH 6TH STREET OFFSET	ELEVATION
1	10+22.30	42.55' LT	60+42.27	22.83' RT	552.87• #
2	10+28.78	42.54' LT	60+42.18	29.31' RT	553.04•
3	10+18.47	34.06' LT	60+33.83	18.89' RT	552.27 ##
4	10+22.78	34.06' LT	60+33.77	23.21' RT	552.57 ##
5	10+28.85	34.06' LT	60+33.70	29.28' RT	552.67
6	10+18.71	29.06' LT	60+28.82	19.07' RT	552.35
7	10+22.78	29.06' LT	60+28.77	23.15' RT	552.65 ##
8	10+27.19	21.30' LT	60+20.96	27.46' RT	552.77 ##
9	10+27.19	19.30' LT	60+18.96	27.43' RT	552.63
10	10+32.19	26.58' LT	60+26.17	32.53' RT	552.83
11	10+32.19	21.58' LT	60+21.17	32.46' RT	552.83 ##
12	10+32.19	18.58' LT	60+18.17	32.42' RT	552.69 ##
13	10+50.00	26.58' LT	60+25.95	50.33' RT	554.23•
14	10+50.00	21.58' LT	60+20.95	50.27' RT	554.15• #

• - MATCH EXISTING
- 0" CURB HEIGHT
- 6" CURB HEIGHT

EDGE OF PAVEMENT ELEVATIONS

POINT#	OHIO STREET STATION	OHIO STREET OFFSET	SOUTH 6TH STREET STATION	SOUTH 6TH STREET OFFSET	ELEVATION
B1	10+15.75	38.21' RT	59+61.60	15.27' RT	552.70•
B2	10+15.78	33.48' RT	59+66.33	15.36' RT	552.30•
B3	10+15.82	27.63' RT	59+72.17	15.47' RT	552.52•
B4	10+19.97	21.11' RT	59+78.64	19.71' RT	553.31•
B5	10+25.00	17.61' RT	59+82.07	24.78' RT	552.56•
B6	10+25.00	17.00' RT	59+82.69	24.78' RT	552.58•
B7	10+32.37	17.00' RT	59+82.59	32.15' RT	552.81

• - MATCH EXISTING

SIDEWALK ELEVATIONS

POINT#	OHIO STREET STATION	OHIO STREET OFFSET	SOUTH 6TH STREET STATION	SOUTH 6TH STREET OFFSET	ELEVATION
20	10+24.18	47.33' RT	59+52.37	23.58' RT	553.80•
21	10+31.43	47.24' RT	59+52.37	30.83' RT	553.95• #
22	10+17.37	33.69' RT	59+66.10	16.94' RT	552.60 ##
23	10+23.98	33.60' RT	59+66.10	23.55' RT	553.00 #
24	10+18.19	28.68' RT	59+71.10	17.83' RT	552.53
25	10+23.92	28.60' RT	59+71.10	23.55' RT	552.95
26	10+27.19	24.28' RT	59+75.38	26.89' RT	553.05
27	10+27.19	19.50' RT	59+80.16	26.95' RT	552.72
28	10+31.19	29.29' RT	59+70.32	30.82' RT	553.15 ##
29	10+32.19	24.29' RT	59+75.31	31.89' RT	553.11 #
30	10+32.19	18.58' RT	59+81.02	31.96' RT	552.80 ##
31	10+62.24	29.19' RT	59+70.03	61.87' RT	555.23• #
32	10+62.24	24.79' RT	59+74.43	61.92' RT	555.16•

• - MATCH EXISTING
- 0" CURB HEIGHT
- 6" CURB HEIGHT

N

GRAPHIC SCALE
10 0 20 40
FEET

FILE NAME = F:\PROJECT FILES\MR0599 2016 Capital Maint\CADD SHEETS\BID PACKAGE 2-BP2.028.GD.14706.Ohio.dgn

CITY OF QUINCY UTILITIES & ENGINEERING	USER NAME = sbange	DESIGNED -	REVISED -	CITY OF QUINCY, ILLINOIS 2016 CAPITAL MAINTENANCE PROGRAM WARDS 4 AND 7	OHIO STREET – 6TH TO 8TH GEOMETRIC DETAILS	CITY OF QUINCY PROJECT NO. MR-599B	TOTAL SHEETS / SHEET NO.
		DRAWN -	REVISED -			JOB NO. 14706	44 / 28
	PLOT SCALE = 20.0000 ' / in.	CHECKED -	REVISED -				
	PLOT DATE = 9/1/2016	DATE -	REVISED -		SCALE: 1"=10' (FS) SHEET NO. 1 OF 3 SHEETS STA. TO STA.		

LEGEND

- DETECTABLE WARNINGS
- SIDE CURB
- RAMP SIDE FLARE

SEE HIGHWAY STANDARDS 424001 AND 424006 FOR CURB RAMP DETAILS NOT SHOWN

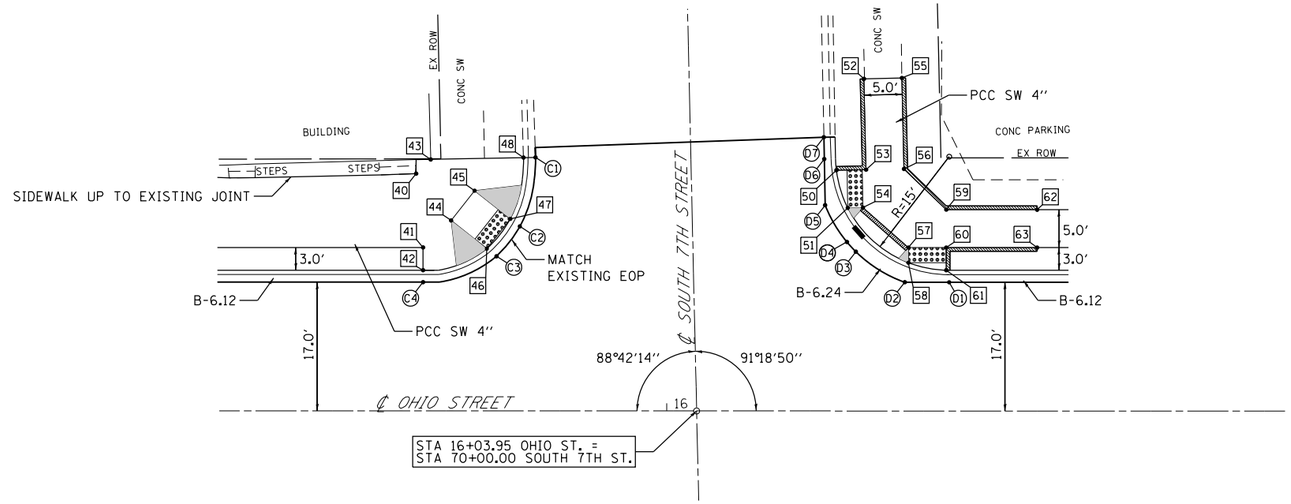

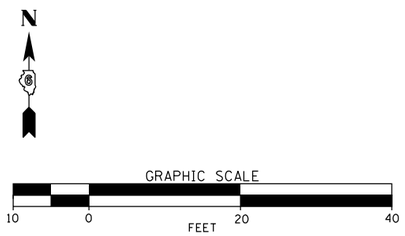

EDGE OF PAVEMENT ELEVATIONS

POINT#	OHIO STREET STATION	OHIO STREET OFFSET	SOUTH 7TH STREET STATION	SOUTH 7TH STREET OFFSET	ELEVATION
C1	15+82.68	33.47' LT	70+33.94	20.50' LT	573.01*
C2	15+80.60	24.36' LT	70+24.89	22.79' LT	573.10
C3	15+77.52	20.42' LT	70+21.02	25.95' LT	573.02
C4	15+67.83	17.00' LT	70+17.81	35.72' LT	572.52

* - MATCH EXISTING

SIDEWALK ELEVATIONS

POINT#	OHIO STREET STATION	OHIO STREET OFFSET	SOUTH 7TH STREET STATION	SOUTH 7TH STREET OFFSET	ELEVATION
40	15+66.92	31.33' LT	70+32.16	36.31' LT	573.26*
41	15+67.83	21.58' LT	70+22.39	35.62' LT	573.14*
42	15+67.83	18.58' LT	70+19.39	35.68' LT	573.02
43	15+68.84	33.19' LT	70+33.98	34.35' LT	573.36
44	15+71.53	25.15' LT	70+25.87	31.84' LT	573.27
45	15+74.63	29.07' LT	70+29.73	28.65' LT	573.35
46	15+76.25	21.43' LT	70+22.05	27.21' LT	572.91
47	15+79.34	25.36' LT	70+25.91	24.03' LT	573.10
48	15+81.10	33.45' LT	70+33.95	22.09' LT	573.49*

* - MATCH EXISTING

EDGE OF PAVEMENT ELEVATIONS

POINT#	OHIO STREET STATION	OHIO STREET OFFSET	SOUTH 7TH STREET STATION	SOUTH 7TH STREET OFFSET	ELEVATION
D1	16+37.28	17.00' LT	70+16.23	33.72' RT	574.60
D2	16+31.43	17.00' LT	70+16.37	27.86' RT	574.49
D3	16+24.97	21.03' LT	70+20.54	21.50' RT	574.33
D4	16+23.78	22.31' LT	70+21.85	20.34' RT	574.25
D5	16+20.91	27.17' LT	70+26.77	17.58' RT	574.40
D6	16+20.79	33.27' LT	70+32.87	17.60' RT	574.46
D7	16+20.74	36.14' LT	70+35.75	17.61' RT	573.38*

* - MATCH EXISTING

SIDEWALK ELEVATIONS

POINT#	OHIO STREET STATION	OHIO STREET OFFSET	SOUTH 7TH STREET STATION	SOUTH 7TH STREET OFFSET	ELEVATION
50	16+22.39	31.78' LT	70+31.35	19.17' RT	574.46 **
51	16+23.90	26.81' LT	70+26.35	20.56' RT	574.42* #
52	16+26.03	43.85' LT	70+43.34	23.09' RT	575.10 **
53	16+26.31	31.86' LT	70+31.34	23.09' RT	574.70
54	16+25.90	26.85' LT	70+26.34	22.56' RT	574.62 **
55	16+31.03	43.97' LT	70+43.34	28.09' RT	575.34* #
56	16+31.31	31.95' LT	70+31.32	28.09' RT	574.79 **
57	16+31.90	21.58' LT	70+20.93	28.44' RT	574.68 **
58	16+31.90	19.58' LT	70+18.93	28.39' RT	574.54
59	16+36.90	26.58' LT	70+25.82	33.55' RT	574.79 **
60	16+36.90	21.58' LT	70+20.82	33.44' RT	574.76 **
61	16+36.90	18.58' LT	70+17.82	33.37' RT	574.60 **
62	16+48.90	26.58' LT	70+25.54	45.55' RT	575.68 #
63	16+48.90	21.58' LT	70+20.54	45.43' RT	575.61 #

* - MATCH EXISTING
# - 0" CURB HEIGHT
** - 6" CURB HEIGHT

FILE NAME = F:\PROJECT FILES\MR0599 2016 Capital Maint\CADD SHEETS\BID PACKAGE 2\BP2.028.GD.14706.Ohio.dgn

CITY OF QUINCY UTILITIES & ENGINEERING	USER NAME = sbange	DESIGNED -	REVISED -	CITY OF QUINCY, ILLINOIS 2016 CAPITAL MAINTENANCE PROGRAM WARDS 4 AND 7	OHIO STREET – 6TH TO 8TH GEOMETRIC DETAILS	CITY OF QUINCY PROJECT NO. MR-599B	TOTAL SHEETS / SHEET NO.
		DRAWN -	REVISED -			JOB NO. 14706	44 / 29
	PLOT SCALE = 20.0000 ' / in.	CHECKED -	REVISED -				
	PLOT DATE = 9/1/2016	DATE -	REVISED -		SCALE: 1"=10' (FS) SHEET NO. 2 OF 3 SHEETS STA. TO STA.		

LEGEND

- DETECTABLE WARNINGS
- SIDE CURB
- RAMP SIDE FLARE

SEE HIGHWAY STANDARDS 424001 AND 424006 FOR CURB RAMP DETAILS NOT SHOWN

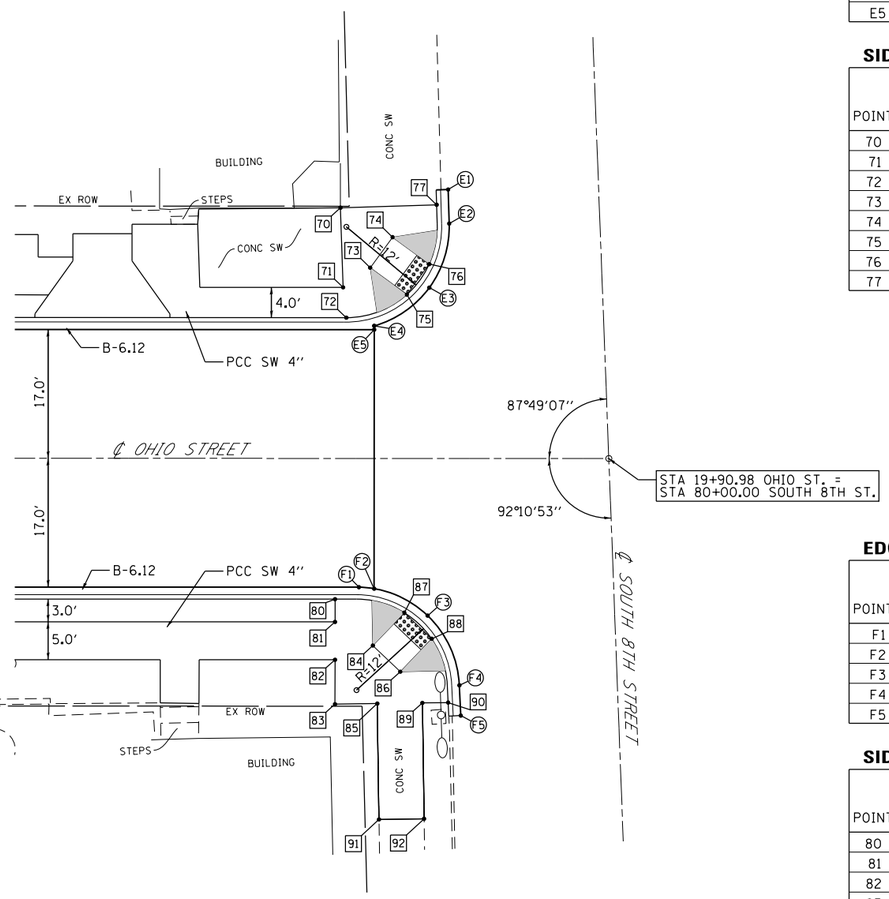

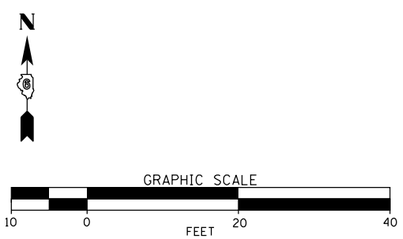

EDGE OF PAVEMENT ELEVATIONS

POINT#	OHIO STREET STATION	OHIO STREET OFFSET	SOUTH 8TH STREET STATION	SOUTH 8TH STREET OFFSET	ELEVATION
E1	19+69.75	35.51' LT	80+36.29	19.86' LT	586.18 *
E2	19+69.89	31.00' LT	80+31.78	19.89' LT	586.14 *
E3	19+67.27	22.55' LT	80+23.44	22.83' LT	585.93 *
E4	19+60.00	17.51' LT	80+18.67	30.29' LT	585.86 *
E5	19+60.00	17.00' LT	80+18.17	30.31' LT	585.87 *

* - MATCH EXISTING

SIDEWALK ELEVATIONS

POINT#	OHIO STREET STATION	OHIO STREET OFFSET	SOUTH 8TH STREET STATION	SOUTH 8TH STREET OFFSET	ELEVATION
70	19+55.54	33.09' LT	80+34.41	34.15' LT	586.75 *
71	19+55.89	22.58' LT	80+23.90	34.20' LT	586.28 *
72	19+56.31	18.58' LT	80+19.89	33.93' LT	586.25
73	19+59.46	25.17' LT	80+26.35	30.53' LT	586.41
74	19+62.42	29.21' LT	80+30.27	27.42' LT	586.49
75	19+64.30	21.63' LT	80+22.63	25.83' LT	585.86
76	19+67.26	25.66' LT	80+26.54	22.72' LT	585.94
77	19+68.23	33.48' LT	80+34.32	21.46' LT	586.45 *

* - MATCH EXISTING

EDGE OF PAVEMENT ELEVATIONS

POINT#	OHIO STREET STATION	OHIO STREET OFFSET	SOUTH 8TH STREET STATION	SOUTH 8TH STREET OFFSET	ELEVATION
F1	19+57.99	17.00' RT	79+84.27	33.61' LT	586.18
F2	19+60.00	17.20' RT	79+84.00	31.61' LT	586.14 *
F3	19+67.06	20.75' RT	79+80.17	24.69' LT	585.93 *
F4	19+71.25	29.95' RT	79+70.83	20.85' LT	585.86 *
F5	19+71.44	33.94' RT	79+66.83	20.81' LT	585.87 *

* - MATCH EXISTING

SIDEWALK ELEVATIONS

POINT#	OHIO STREET STATION	OHIO STREET OFFSET	SOUTH 8TH STREET STATION	SOUTH 8TH STREET OFFSET	ELEVATION
80	19+54.84	18.58' RT	79+82.81	36.82' LT	586.02
81	19+54.84	21.58' RT	79+79.81	36.93' LT	586.14
82	19+54.84	26.58' RT	79+74.81	37.13' LT	586.22
83	19+54.84	32.45' RT	79+68.95	37.35' LT	586.31
84	19+59.84	24.70' RT	79+76.50	32.06' LT	586.37
85	19+60.42	32.37' RT	79+68.82	31.76' LT	586.45
86	19+63.45	28.16' RT	79+72.91	28.57' LT	586.45
87	19+63.98	20.36' RT	79+80.68	27.75' LT	585.88
88	19+67.60	23.82' RT	79+77.09	24.27' LT	585.99
89	19+66.38	32.28' RT	79+68.68	25.81' LT	586.54
90	19+69.77	32.23' RT	79+68.60	22.41' LT	586.68
91	19+60.65	47.66' RT	79+53.53	32.12' LT	586.97 *
92	19+66.60	47.57' RT	79+53.39	26.17' LT	586.81 *

* - MATCH EXISTING

FILE NAME = F:\PROJECT FILES\MR0599 2016 Capital Maint\CADD SHEETS\BID PACKAGE 2\BP2.028.GD.14706.Ohio.dgn

CITY OF QUINCY UTILITIES & ENGINEERING	USER NAME = sbange	DESIGNED -	REVISED -	CITY OF QUINCY, ILLINOIS 2016 CAPITAL MAINTENANCE PROGRAM WARDS 4 AND 7	OHIO STREET – 6TH TO 8TH GEOMETRIC DETAILS	CITY OF QUINCY PROJECT NO. MR-599B	TOTAL SHEETS / SHEET NO.
		DRAWN -	REVISED -			JOB NO. 14706	44 / 30
	PLOT SCALE = 20.0000 ' / in.	CHECKED -	REVISED -				
	PLOT DATE = 9/1/2016	DATE -	REVISED -		SCALE: 1"=10' (FS) SHEET NO. 3 OF 3 SHEETS STA. TO STA.		

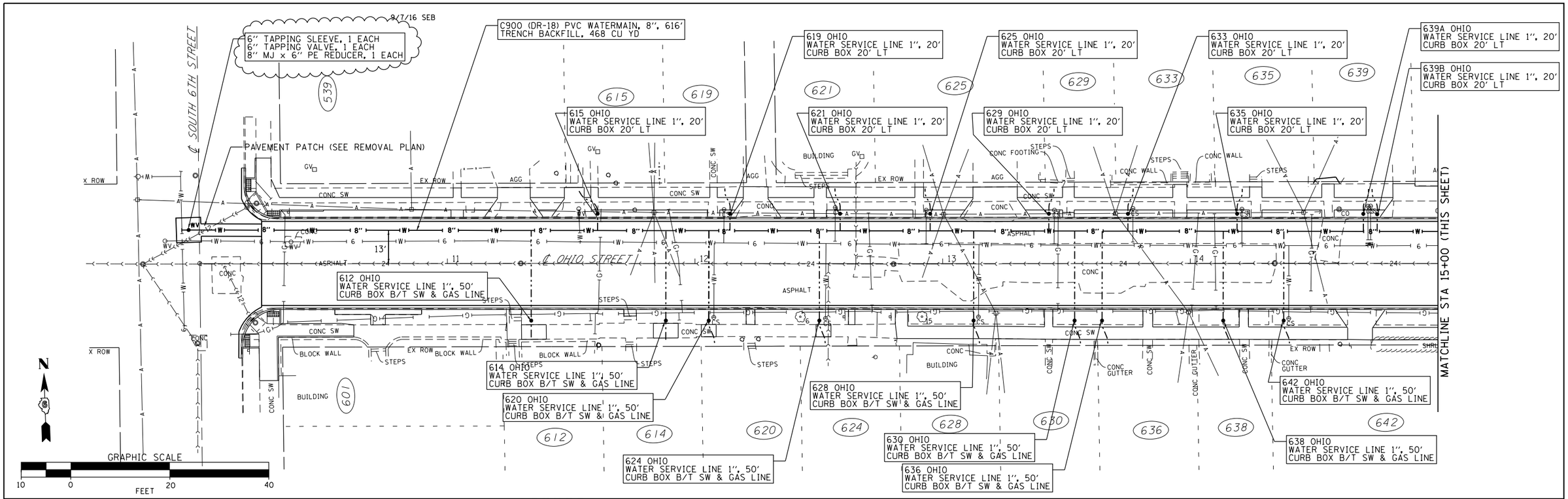

FILE NAME = F:\PROJECT FILES\MR0599 2016 Capital Maint\CADD SHEETS\BID PACKAGE 2\BP2.031.WATER.14706.Ohio.dgn

CITY OF QUINCY UTILITIES & ENGINEERING	USER NAME = sbange	DESIGNED -	REVISED - 9/7/16 SEB	CITY OF QUINCY, ILLINOIS 2016 CAPITAL MAINTENANCE PROGRAM WARDS 4 AND 7	OHIO STREET – SOUTH 6TH TO SOUTH 8TH WATER MAIN PLAN	CITY OF QUINCY PROJECT NO. MR-599B	TOTAL SHEETS / SHEET NO.
		DRAWN -	REVISED -			JOB NO. 14706	44 / 31
	PLOT SCALE = 40.0000 ' / in.	CHECKED -	REVISED -				
	PLOT DATE = 9/7/2016	DATE -	REVISED -		SCALE: 1"=20' (FS) SHEET NO. 1 OF 1 SHEETS STA. 10+00 TO STA. 20+00		

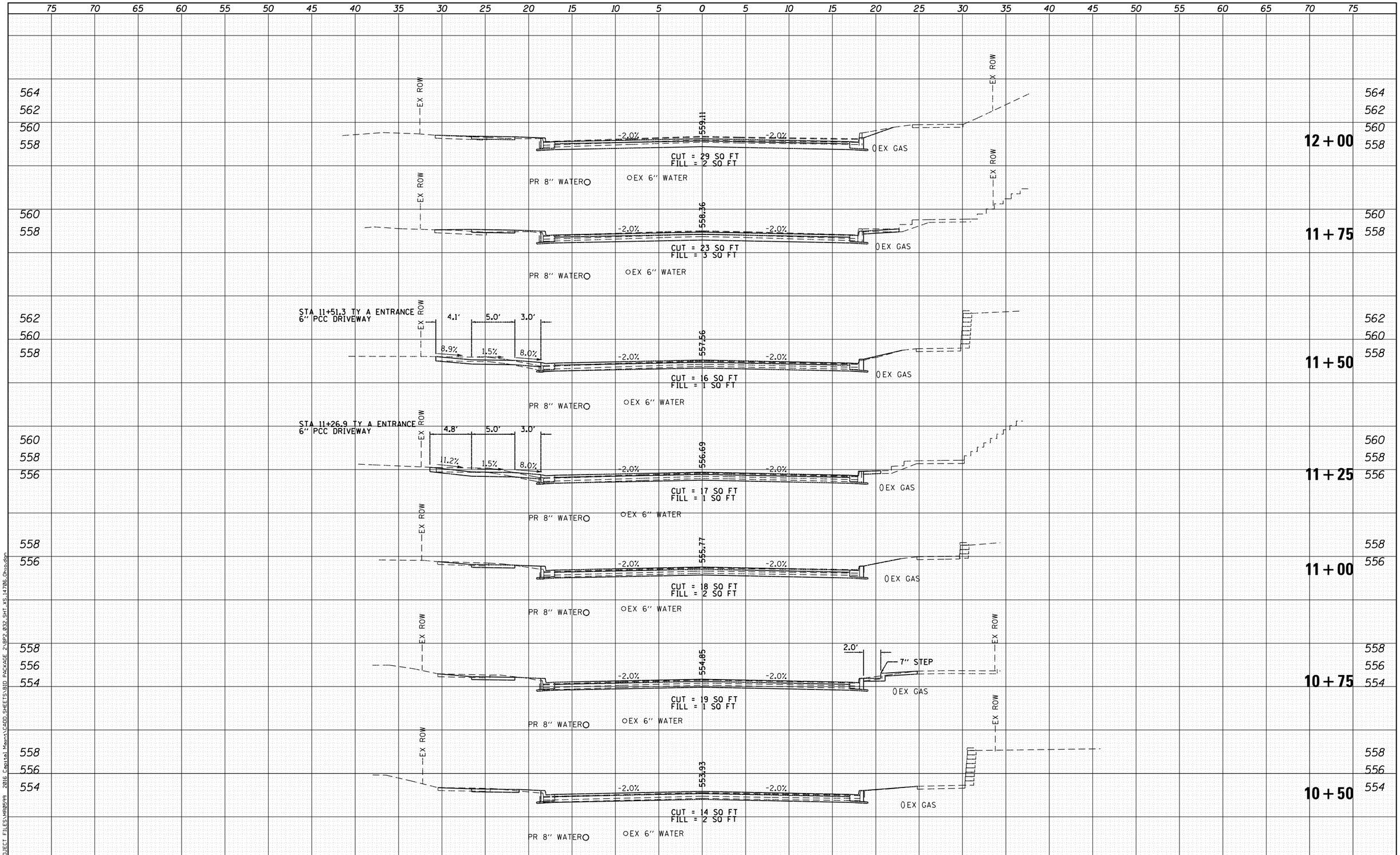

FINAL SURVEY	BY	DATE
SURVEYED		
PLOTTED		
TEMPLATE		
AREAS		
AREAS CHECKED		
NOTE BOOK		
NO.		

ORIGINAL SURVEY	BY	DATE
SURVEYED		
PLOTTED		
TEMPLATE		
AREAS		
AREAS CHECKED		
NOTE BOOK		
NO.		

FILE NAME = F:\PROJECT FILES\MR0599 2016 Capital Maint\CADD SHEETS\BID PACKAGE 2\BP2.032.SHT.XS.14706.Ohio.dgn

CITY OF QUINCY UTILITIES & ENGINEERING

USER NAME = sbange	DESIGNED -	REVISED -
	DRAWN -	REVISED -
PLOT SCALE = 10.0000 ' / in.	CHECKED -	REVISED -
PLOT DATE = 9/1/2016	DATE -	REVISED -

CITY OF QUINCY, ILLINOIS
2016 CAPITAL MAINTENANCE PROGRAM
WARDS 4 AND 7

OHIO STREET – SOUTH 6TH TO SOUTH 8TH
CROSS SECTIONS

SCALE: | SHEET NO. 1 OF 6 SHEETS | STA. 10+50 TO STA. 12+00

CITY OF QUINCY PROJECT NO. MR-599B	TOTAL SHEETS	SHEET NO.
JOB NO. 14706	44	32

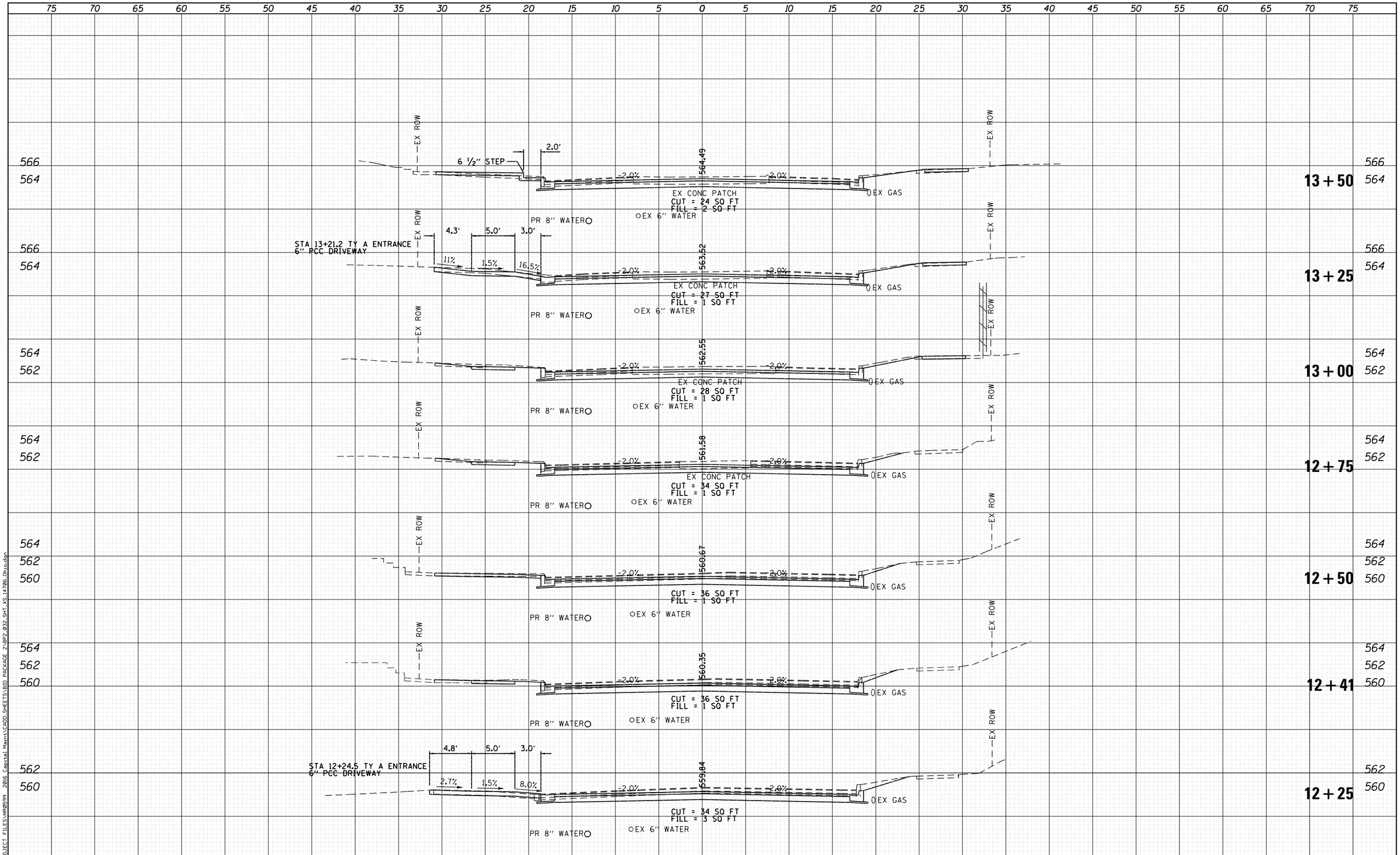

FINAL SURVEY		BY	DATE
NOTE BOOK	SURVEYED		
	PLOTTED		
	TEMPLATE		
	AREAS		
NO.	AREAS CHECKED		

ORIGINAL SURVEY		BY	DATE
NOTE BOOK	SURVEYED		
	PLOTTED		
	TEMPLATE		
	AREAS		
NO.	AREAS CHECKED		

FILE NAME = F:\PROJECT FILES\MR0599 2016 Capital Maint\CADD_SHEETS\BID PACKAGE 2\BP2_032_SHT_XS_14706_Ohio.dgn

CITY OF QUINCY UTILITIES & ENGINEERING

USER NAME = sbange	DESIGNED -	REVISED -
	DRAWN -	REVISED -
PLOT SCALE = 10.0000 ' / in.	CHECKED -	REVISED -
PLOT DATE = 9/1/2016	DATE -	REVISED -

CITY OF QUINCY, ILLINOIS
2016 CAPITAL MAINTENANCE PROGRAM
WARDS 4 AND 7

OHIO STREET – SOUTH 6TH TO SOUTH 8TH
CROSS SECTIONS

SCALE: | SHEET NO. 2 OF 6 SHEETS | STA. 12+25 TO STA. 13+50

CITY OF QUINCY PROJECT NO. MR-599B	TOTAL SHEETS	SHEET NO.
JOB NO. 14706	44	33

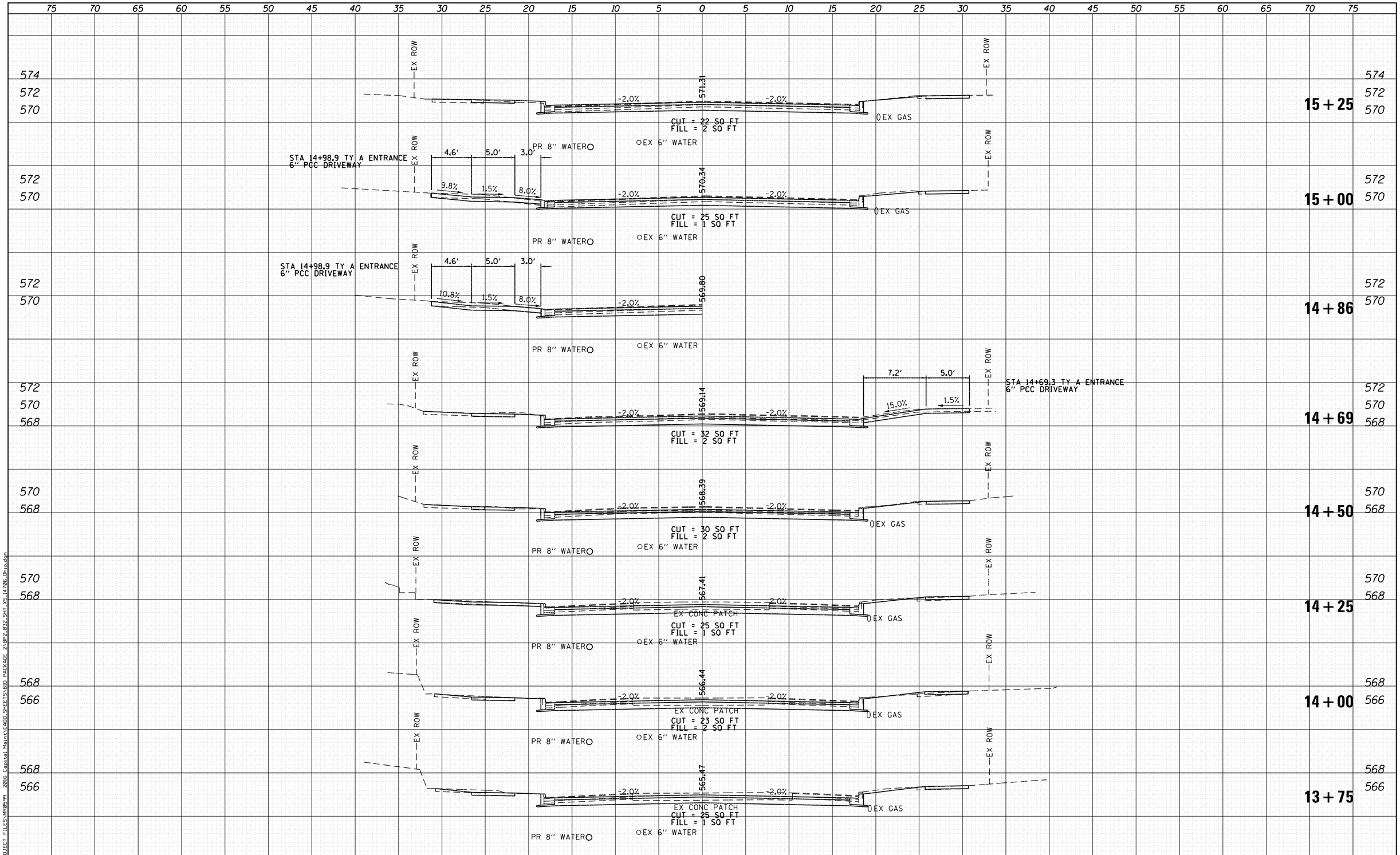

FINAL SURVEY	BY	DATE
SURVEYED		
PLOTTED		
TEMPLATE		
AREAS		
AREAS CHECKED		
NOTE BOOK		
NO.		

ORIGINAL SURVEY	BY	DATE
SURVEYED		
PLOTTED		
TEMPLATE		
AREAS		
AREAS CHECKED		
NOTE BOOK		
NO.		

FILE NAME = F:\PROJECT FILES\MR0599 2016 Capital Maint\CADD_SHEETS\BID PACKAGE 2\BP2.032_SHT_XS_14706_Ohiodon

CITY OF QUINCY UTILITIES & ENGINEERING

USER NAME = sbange	DESIGNED -	REVISED -
	DRAWN -	REVISED -
PLOT SCALE = 10.0000 ' / in.	CHECKED -	REVISED -
PLOT DATE = 9/1/2016	DATE -	REVISED -

CITY OF QUINCY, ILLINOIS
2016 CAPITAL MAINTENANCE PROGRAM
WARDS 4 AND 7

OHIO STREET – SOUTH 6TH TO SOUTH 8TH
CROSS SECTIONS

SCALE: | SHEET NO. 3 OF 6 SHEETS | STA. 13+75 TO STA. 15+25

CITY OF QUINCY PROJECT NO. MR-599B	TOTAL SHEETS	SHEET NO.
JOB NO. 14706	44	34

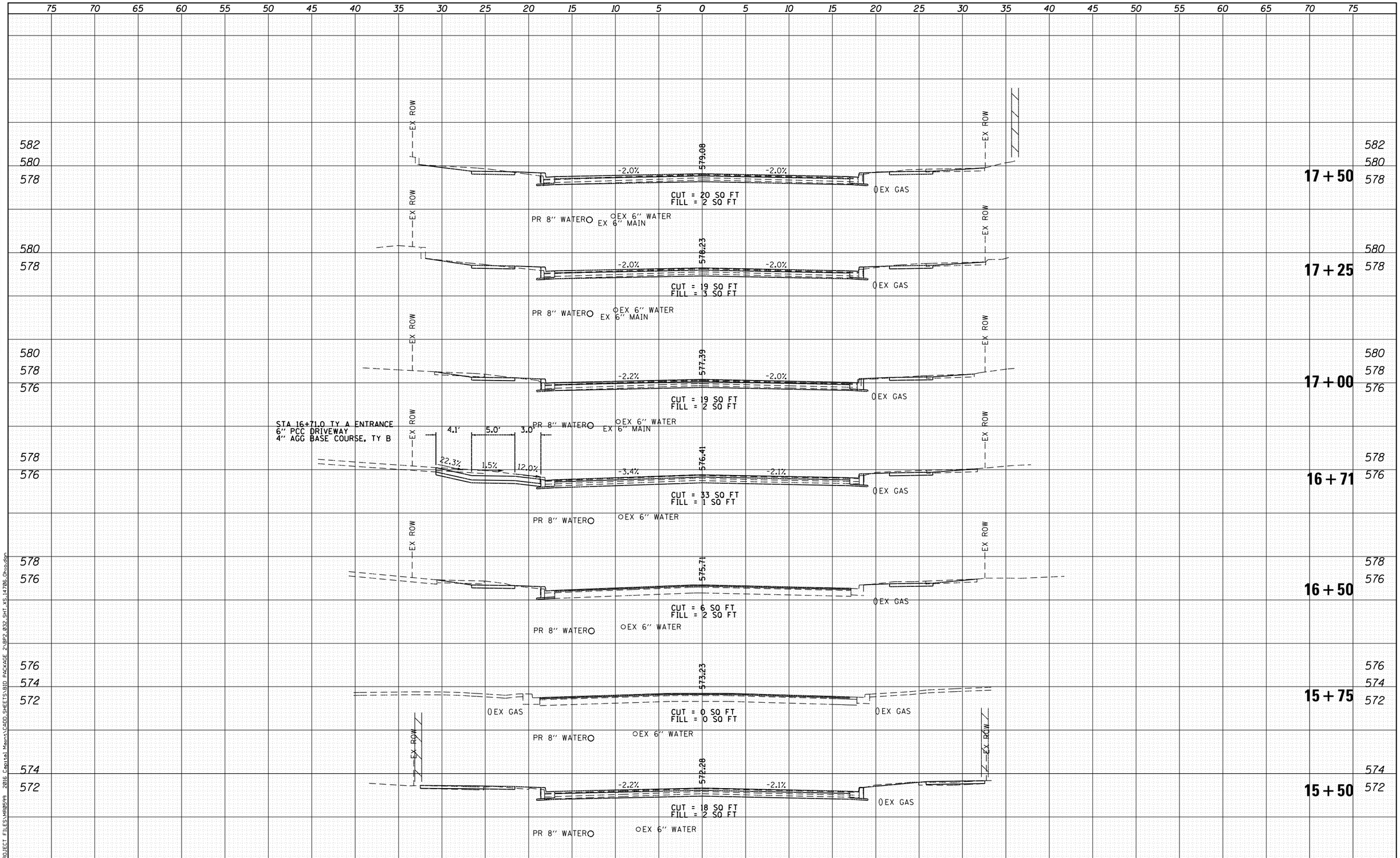

FINAL SURVEY			BY	DATE
NOTE BOOK	SURVEYED			
	PLOTTED			
	TEMPLATE			
	AREAS			
NO.	AREAS CHECKED			

ORIGINAL SURVEY			BY	DATE
NOTE BOOK	SURVEYED			
	PLOTTED			
	TEMPLATE			
	AREAS			
NO.	AREAS CHECKED			

FILE NAME = F:\PROJECT FILES\MR0599 2016 Capital Main\CADD\SHEETS\BID PACKAGE 2\BP2.032.SHT.XS.14706.Ohio.dgn

CITY OF QUINCY UTILITIES & ENGINEERING

USER NAME = sbange	DESIGNED -	REVISED -
	DRAWN -	REVISED -
PLOT SCALE = 10.0000 ' / in.	CHECKED -	REVISED -
PLOT DATE = 9/1/2016	DATE -	REVISED -

CITY OF QUINCY, ILLINOIS
2016 CAPITAL MAINTENANCE PROGRAM
WARDS 4 AND 7

OHIO STREET – SOUTH 6TH TO SOUTH 8TH
CROSS SECTIONS

SCALE: | SHEET NO. 4 OF 6 SHEETS | STA. 15+50 TO STA. 17+50

CITY OF QUINCY PROJECT NO. MR-599B	TOTAL SHEETS	SHEET NO.
JOB NO. 14706	44	35

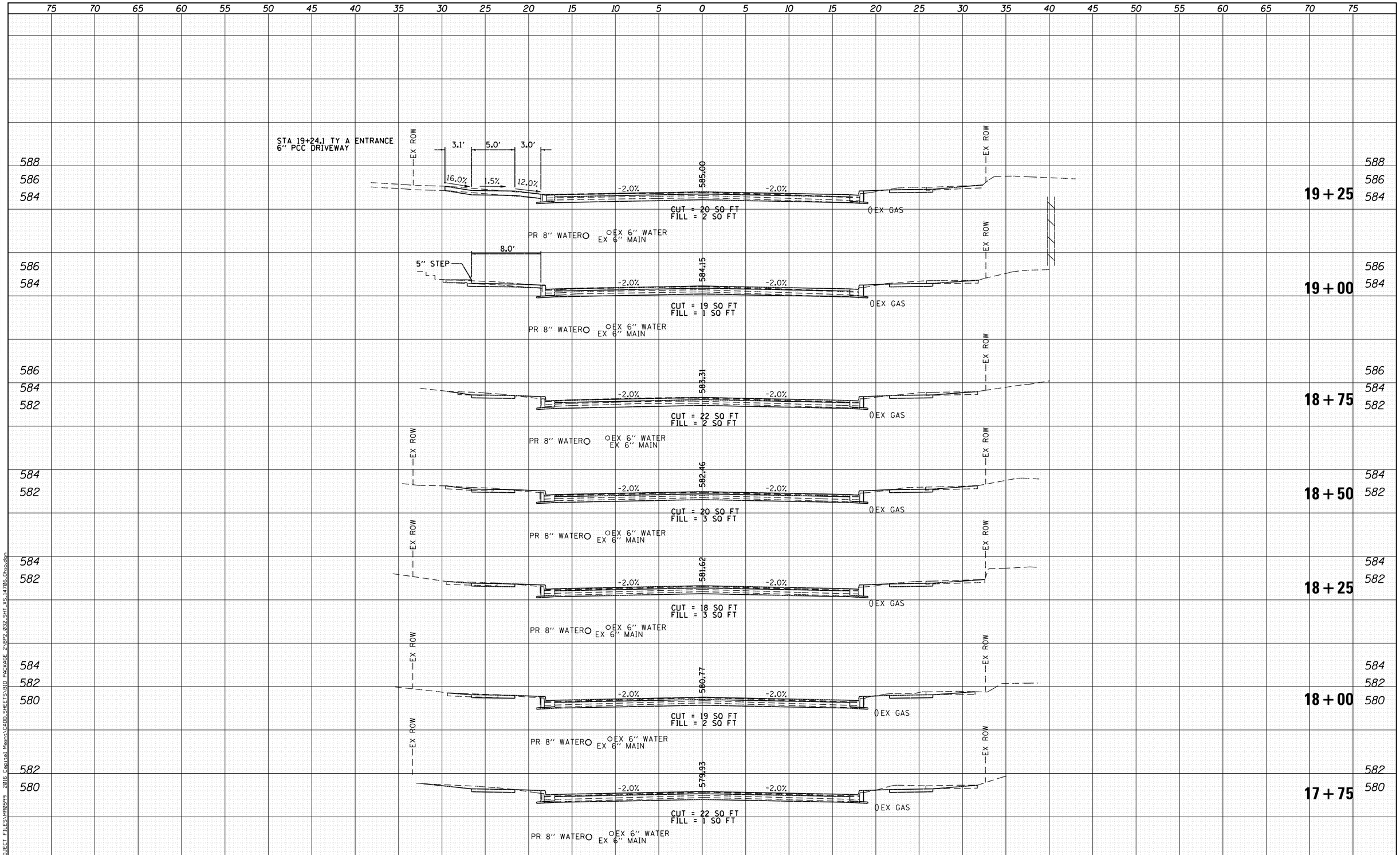

FINAL SURVEY	BY	DATE
SURVEYED		
PLOTTED		
TEMPLATE		
AREAS		
AREAS CHECKED		
NOTE BOOK		
NO.		

ORIGINAL SURVEY	BY	DATE
SURVEYED		
PLOTTED		
TEMPLATE		
AREAS		
AREAS CHECKED		
NOTE BOOK		
NO.		

FILE NAME = F:\PROJECT FILES\MR0599 2016 Capital Maint\CADD_SHEETS\BID PACKAGE 2\BP2.032.SHT.XS.14706.Ohio.dgn

CITY OF QUINCY UTILITIES & ENGINEERING

USER NAME = sbange	DESIGNED -	REVISED -
	DRAWN -	REVISED -
PLOT SCALE = 10.0000 ' / in.	CHECKED -	REVISED -
PLOT DATE = 9/1/2016	DATE -	REVISED -

CITY OF QUINCY, ILLINOIS
2016 CAPITAL MAINTENANCE PROGRAM
WARDS 4 AND 7

OHIO STREET – SOUTH 6TH TO SOUTH 8TH
CROSS SECTIONS

SCALE: | SHEET NO. 5 OF 6 SHEETS | STA. 17+75 TO STA. 19+25

CITY OF QUINCY PROJECT NO. MR-599B	TOTAL SHEETS	SHEET NO.
JOB NO. 14706	44	36

FINAL SURVEY		BY	DATE
NOTE BOOK NO.	SURVEYED		
	PLOTTED		
	TEMPLATE		
	AREAS		
	AREAS CHECKED		

ORIGINAL SURVEY		BY	DATE
NOTE BOOK NO.	SURVEYED		
	PLOTTED		
	TEMPLATE		
	AREAS		
	AREAS CHECKED		

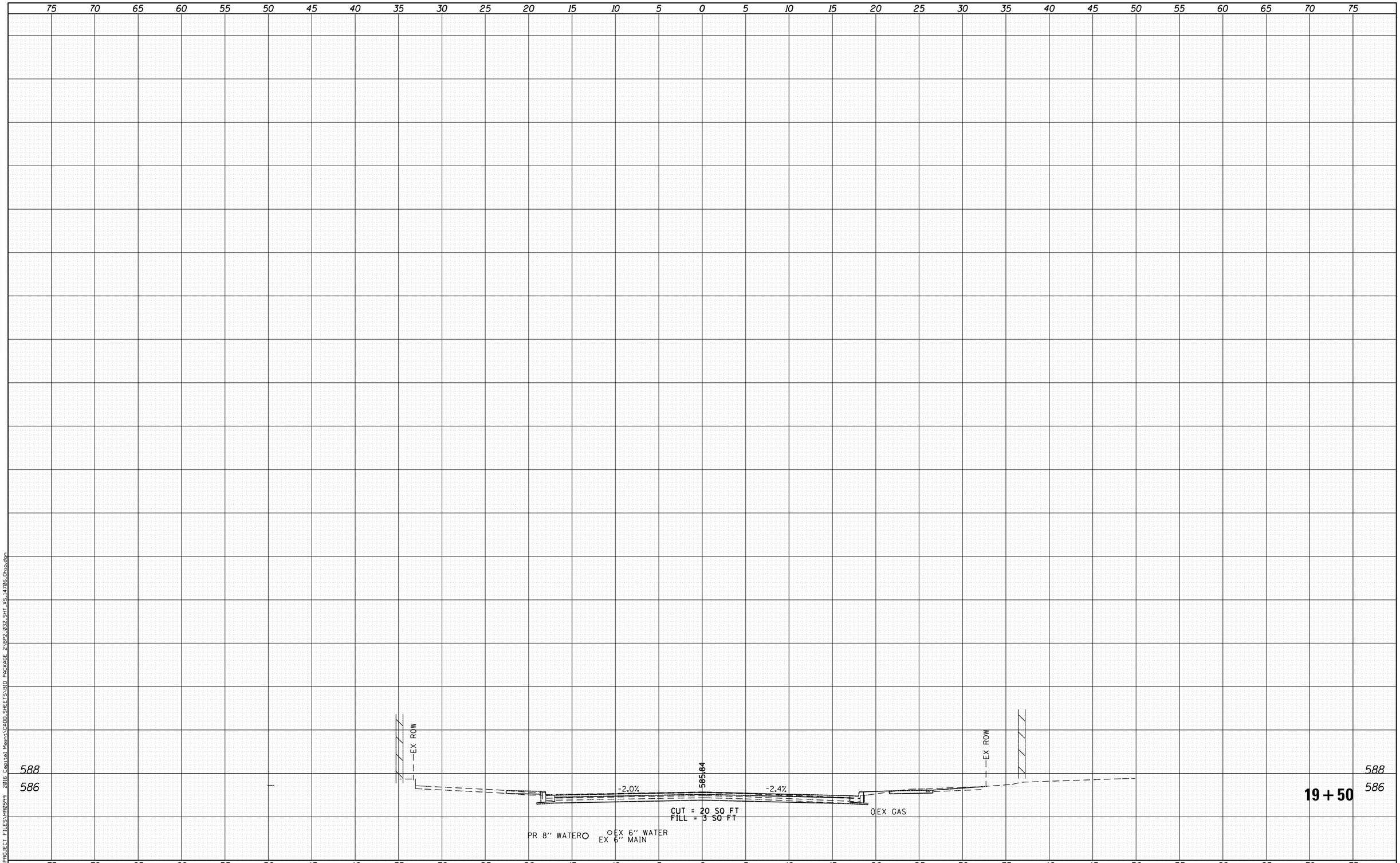

FILE NAME = F:\PROJECT FILES\MR0599 2016 Capital Maint\CADD\SHEETS\BID PACKAGE 2\BP2_032_SHT_XS_14706_Ohio.dgn

CITY OF QUINCY UTILITIES & ENGINEERING	USER NAME = sbange	DESIGNED -	REVISED -
		DRAWN -	REVISED -
	PLOT SCALE = 10.0000 ' / in.	CHECKED -	REVISED -
	PLOT DATE = 9/1/2016	DATE -	REVISED -

CITY OF QUINCY, ILLINOIS
2016 CAPITAL MAINTENANCE PROGRAM
WARDS 4 AND 7

SCALE: | SHEET NO. OF SHEETS | STA. 19+50 TO STA. 19+50

CITY OF QUINCY PROJECT NO. MR-599B	TOTAL SHEETS	SHEET NO.
JOB NO.	44	37

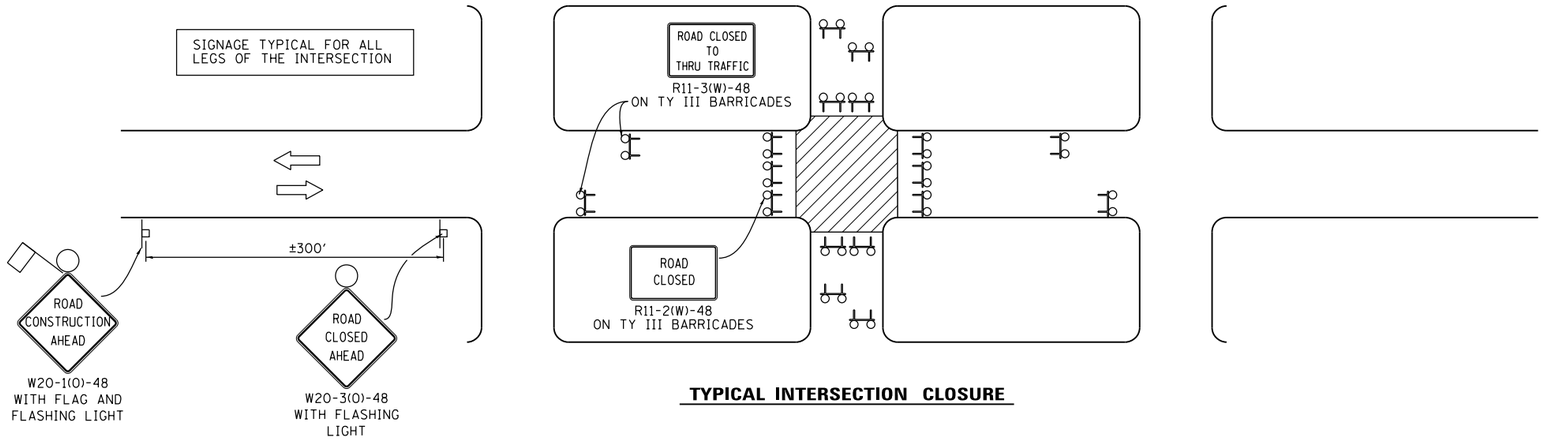

TYPICAL INTERSECTION CLOSURE

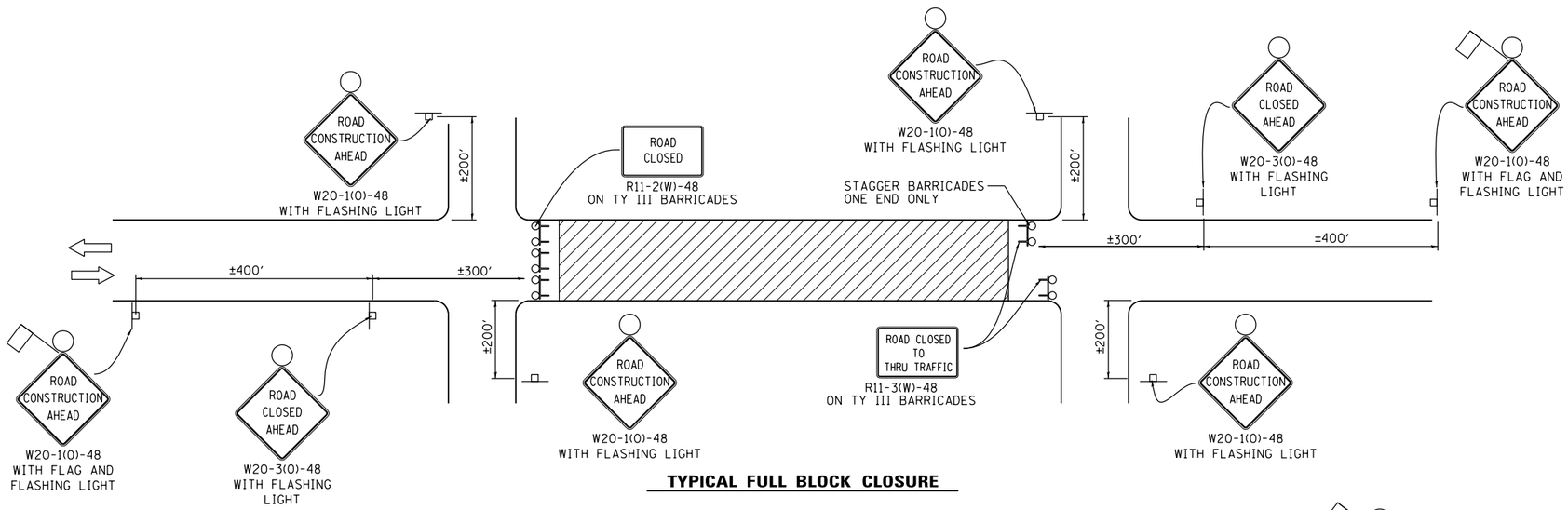

TYPICAL FULL BLOCK CLOSURE

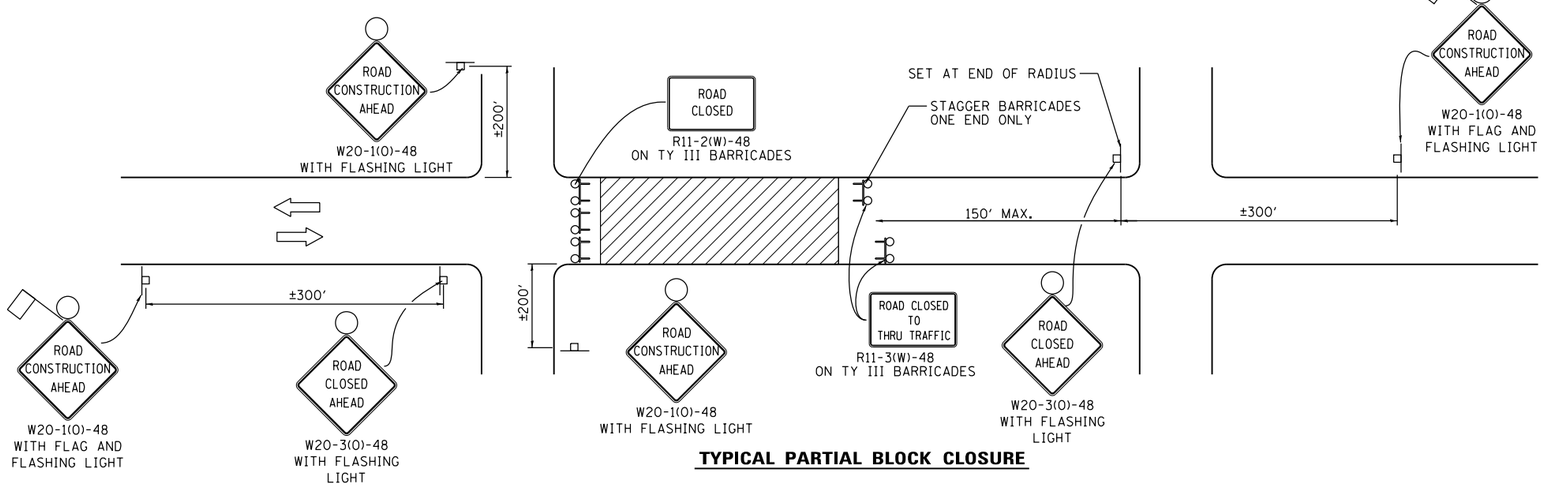

TYPICAL PARTIAL BLOCK CLOSURE

LEGEND

- WORK AREA
- TYPE III BARRICADE WITH FLASHING LIGHTS
- SIGN ON PORTABLE OR POST MOUNTED SUPPORT

GENERAL NOTES

1 LIMITS OF THE WORK ZONE.

2. THE EXACT NUMBER OF TYPE III BARRICADES REQUIRED TO BE DETERMINED IN THE FILED BY THE ENGINEER.

3. SIGNS SHALL BE POST MOUNTED IF THE CLOSURE IS GREATER THAN FOUR (4) CALENDAR DAYS.

4. DIMENSIONS MAY BE VARIED DUE TO SIGH CONDITIONS, TOPOGRAPHY, AND URBAN LANDSCAPE.

5. ORANGE FLAG - MINIMUM 18" BY 18"

6. FOR CLOSURES ON ONE-WAY STREETS, PLACE WARNING SIGNS ON APPROACH SIDE ONLY.

7. ENGINEER TO DETERMINE WHICH APPROACH TO STAGGER THE TYPE III BARRICADES.

8. TRAFFIC CONTROL AND PROTECTION IN THIS DETAIL TO BE MEASURED ON AN EACH BASIS. WORK ZONES MUST BE SPACED GREATER THAN 800' APART FOR THE TRAFFIC CONTROL AND PROTECTION TO BE MEASURED FOR SEPARATELY. . CLOSURES CAN BE COMBINED AS NEEDED TO MEET THE

9. THIS TRAFFIC CONTROL DETAIL MAY BE USED FOR ALLEY CLOSURES.

FILE NAME = F:\PROJECT FILES\MR0599 2016 Capital Maint\CADD SHEETS\BID PACKAGE 2\BP2.038.SHT MR05998.DETAIL01.dgn

CITY OF QUINCY UTILITIES & ENGINEERING	USER NAME = sbange	DESIGNED -	REVISED -	CITY OF QUINCY, ILLINOIS 2016 CAPITAL MAINTENANCE PROGRAM WARDS 4 AND 7	TRAFFIC CONTROL & PROTECTION URBAN LOCAL STREET CLOSURES	CITY OF QUINCY PROJECT NO. MR-599B	TOTAL SHEETS / SHEET NO.
		DRAWN -	REVISED -			JOB NO. ALL	44 / 38
	PLOT SCALE = 40.0000 ' / in.	CHECKED -	REVISED -				
	PLOT DATE = 9/1/2016	DATE -	REVISED -		SCALE: NONE / SHEET NO. 1 OF 1 SHEETS / STA. - TO STA. -		

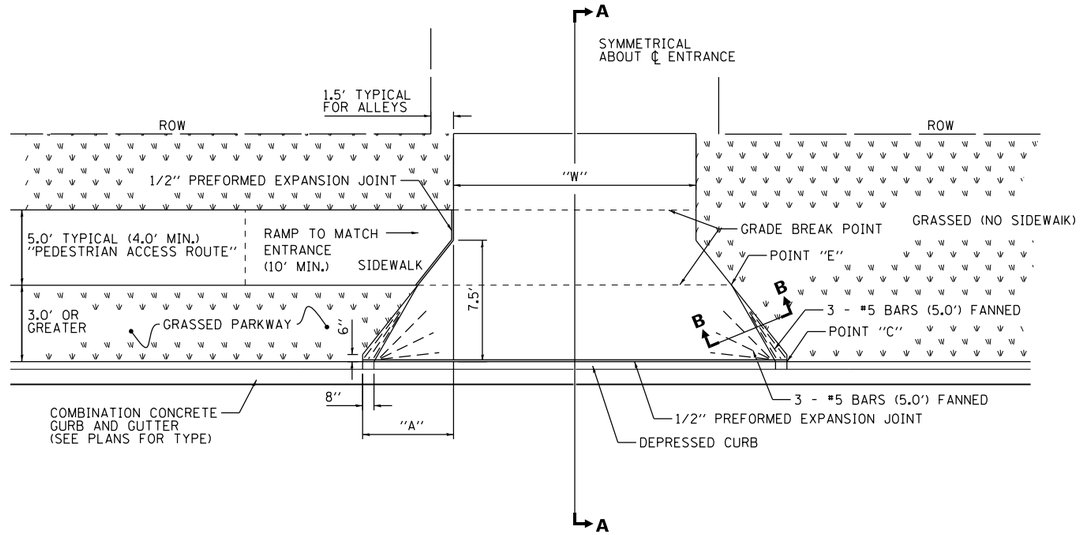

TYPICAL ENTRANCE – TYPE A (3' OR NO PARKWAY)

"A" = 6.0' FOR ALLEYS
5.0' FOR OTHERS

"W" = SEE PLAN SHEETS
16.0' (TYPICAL) ALLEYS
12.0' (MIN.) DRIVEWAYS

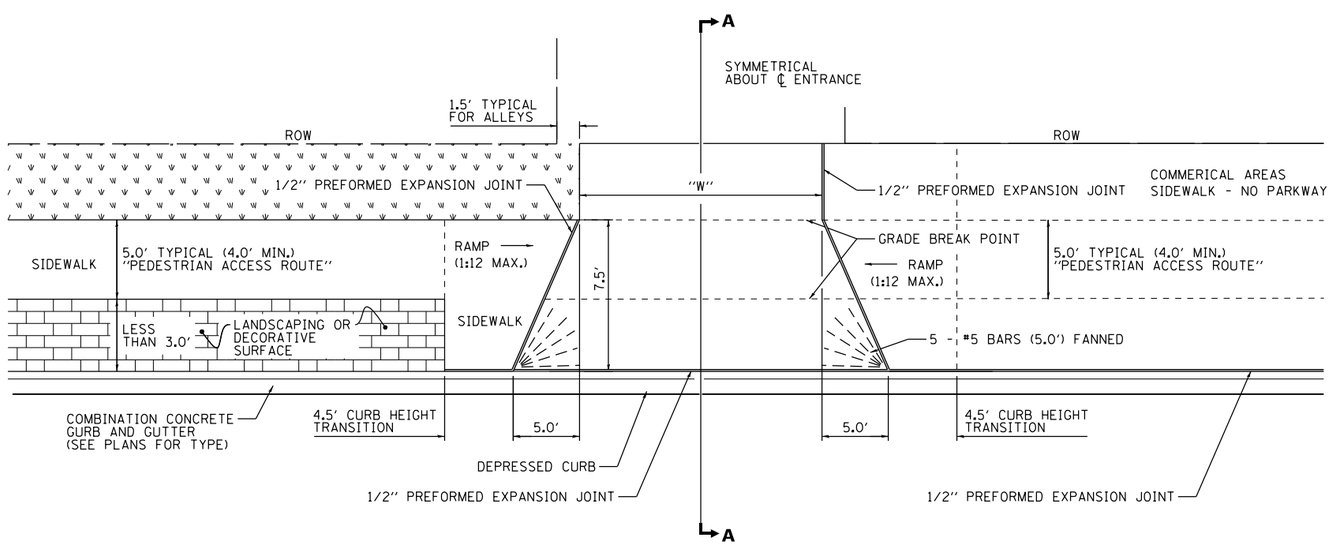

TYPICAL ENTRANCE – TYPE B (<3' PARKWAY)

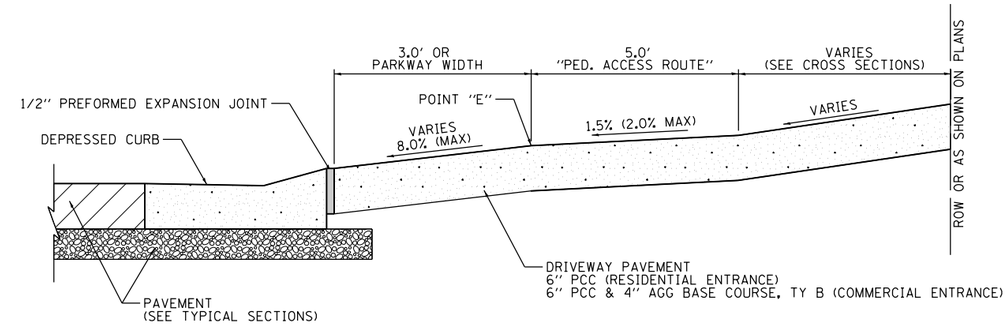

SECTION A–A

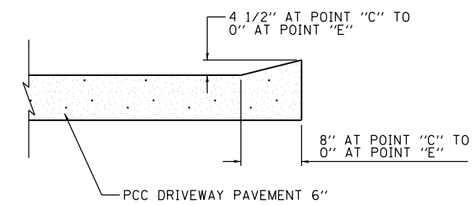

SECTION B–B

NOTES

1. CLASS PV CONCRETE SHALL BE USED THROUGH–OUT.
2. THE INSTALLATION OF 1/2" PREFORMED EXPANSION JOINTS AND REBAR SHALL BE INCLUDED IN THE UNIT PRICE BID FOR P.C.C. DRIVEWAY PAVEMENT.
3. THE UNIT PRICE BID FOR THIS ITEM SHALL INCLUDE THE FURNISHING OF ALL LABOR AND MATERIALS NECESSARY TO CONSTRUCT THE P.C.C. DRIVEWAY PAVEMENT.
4. DRIVEWAY MAY REQUIRE A SLOPE CHANGE AT DETERMINED DISTANCES BEHIND CURB FOR SIDEWALK OR DRAINAGE CORRECTIONS DUE TO EXCESSIVE OR INADEQUATE SLOPE OF STRAIGHT LINE GRADE.
5. COST OF CONSTRUCTING A SLOPE CHANGE IF NECESSARY AND ALL JOINTING SHALL BE INCIDENTAL TO THE COST PER SQUARE YARD OF P.C.C. DRIVEWAY PAVEMENT.
6. REFER TO CROSS SECTIONS FOR DRIVE AND SIDEWALK CROSS SLOPES.
7. REFER TO PLAN AND PROFILE SHEETS FOR DRIVEWAY WIDTHS OR MATCH EXISTING.
8. SAW OR SCRATCH JOINTS IN EACH ENTRANCE SO THAT NO SECTION REMAINS LARGER THAN 12 FEET IN ANY DIMENSION.
9. MAXIMUM WIDTH OF A DRIVEWAY OR ALLEY ENTRANCE AT THE RIGHT–OF–WAY LINE SHALL BE THIRTY (30) FEET UNLESS OTHERWISE NOTED.

FILE NAME = F:\PROJECT FILES\MR0599 2016 Capital Maint\CADD SHEETS\BID PACKAGE 2\BP2.038.SHT MR05998_DETAIL01.dgn

CITY OF QUINCY UTILITIES & ENGINEERING	USER NAME = sbange	DESIGNED -	REVISED -	CITY OF QUINCY, ILLINOIS 2016 CAPITAL MAINTENANCE PROGRAM WARDS 4 AND 7	MISCELLANEOUS DETAILS – URBAN ENTRANCE DETAILS	CITY OF QUINCY PROJECT NO. MR-599B	TOTAL SHEETS / SHEET NO.
		DRAWN -	REVISED -			JOB NO.	44 / 39
	PLOT SCALE = 40.0000 ' / in.	CHECKED -	REVISED -				
	PLOT DATE = 9/1/2016	DATE - 6/2016	REVISED -		SCALE: NONE / SHEET NO. 1 OF 1 SHEETS / STA. - TO STA. -		

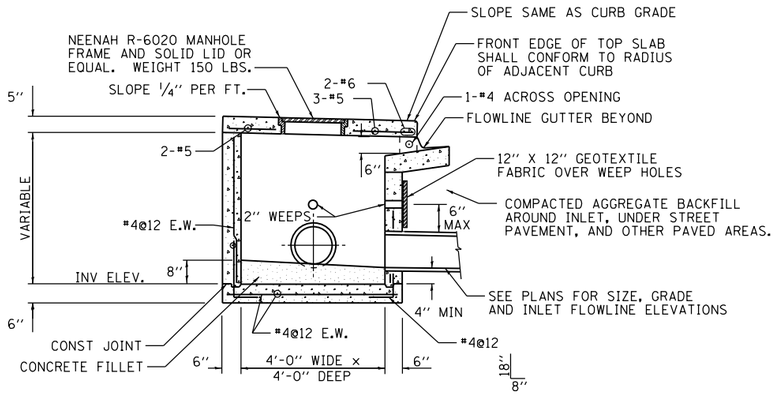

SECTION A–A

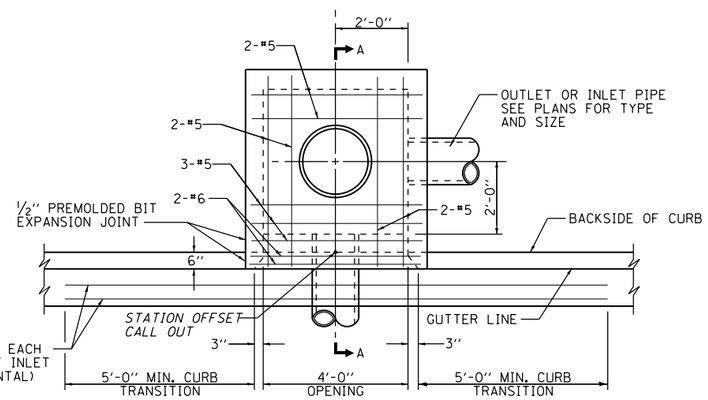

PLAN

STATION OFFSET CALL OUT IS THE CENTER OF INLET AND THE BACK OF CURB.

INLETS, SPECIAL, TYPE E, 4' X 4'

NOT TO SCALE

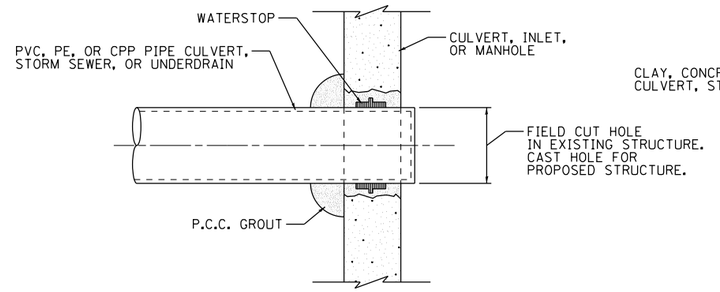

CLASS "B" PIPE

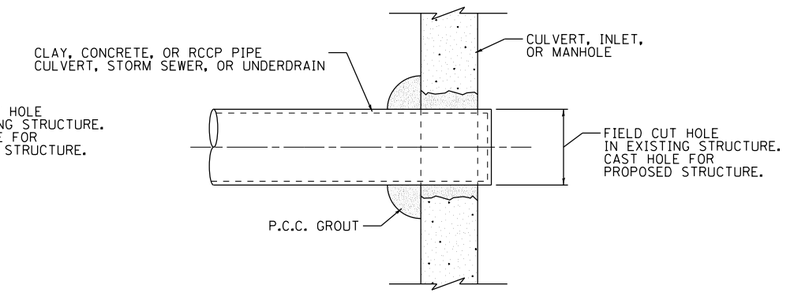

CLASS "A" PIPE

PLACING PIPE IN CONCRETE STRUCTURE

NOT TO SCALE

NOTE: THE COST OF PLACING PIPE IN THE CONCRETE STRUCTURE SHALL BE INCLUDED IN THE COST OF THE PIPE, UNDERDRAIN, OR STRUCTURE.

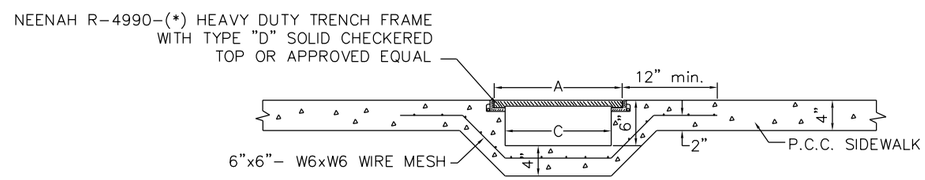

COST OF FURNISHING AND INSTALLING WIRE MESH SHALL BE INCLUDED IN THE PRICE FOR TRENCH FRAME & SOLID COVER (TYPE D).
COST OF FURNISHING AND INSTALLING REBAR AND CONSTRUCTING CURB OPENING SHALL BE INCLUDED IN THE PRICE FOR TRENCH FRAME & SOLID COVER.

DIMENSION (INCHES)

TYPE(*)	A	C	
R-4990-C	12"	10"	(SMALL)
R-4990-E	17"	15"	(LARGE)

REFER TO PLAN AND PROFILE SHEETS AND PAY QUANTITIES FOR TYPE OF FRAME AND SOLID COVER TO BE INSTALLED

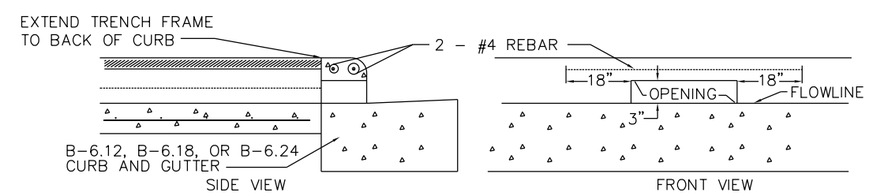

TRENCH DRAIN DETAIL

NOT TO SCALE

FILE NAME = F:\PROJECT FILES\MR0599 2016 Capital Maint\CADD SHEETS\BID PACKAGE 2\BP2 038 SHT MR0599B DETAIL01.dgn

CITY OF QUINCY UTILITIES & ENGINEERING	USER NAME = sbange	DESIGNED -	REVISED - 8/4/16 SEB	CITY OF QUINCY, ILLINOIS 2016 CAPITAL MAINTENANCE PROGRAM WARDS 4 AND 7	MISCELLANEOUS DETAILS – INLET & STRUCTURE CONNECTION DETAILS
		DRAWN -	REVISED -		
	PLOT SCALE = 40.0001 ' / in.	CHECKED -	REVISED -		
	PLOT DATE = 9/1/2016	DATE -	REVISED -		

SCALE: NONE | SHEET NO. 1 OF 1 SHEETS | STA. - TO STA. -

CITY OF QUINCY PROJECT NO. MR-599B	TOTAL SHEETS	SHEET NO.
JOB NO.	44	40

NOTES:

1. PROVIDE 48" MINIMUM COVER OVER HYDRANT LEAD.
2. USE STAINLESS STEEL BOLTS & HARDWARE FOR BURIED FLANGE CONNECTIONS.
3. FOLLOW VALVE INSTALLATION DETAILS FOR SETTING HYDRANT LEAD VALVE.

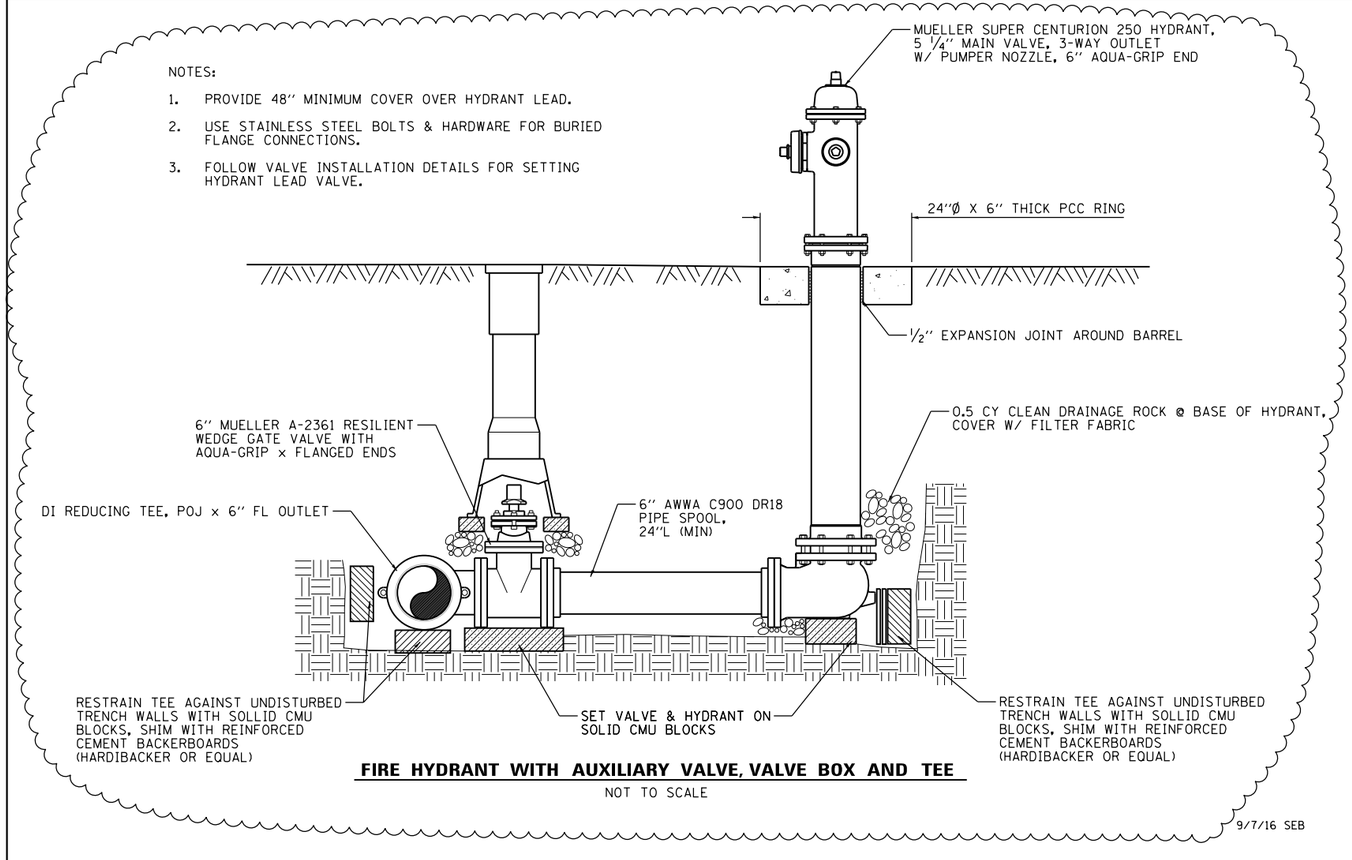

FIRE HYDRANT WITH AUXILIARY VALVE, VALVE BOX AND TEE

NOT TO SCALE

9/7/16 SEB

9/7/16 SEB

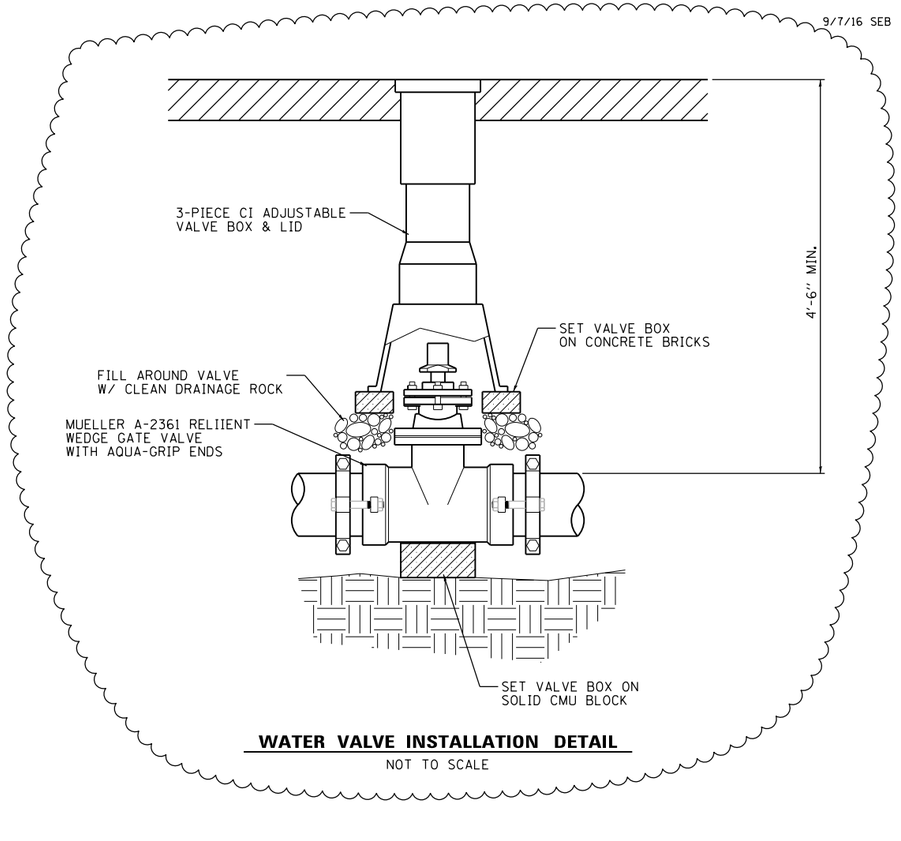

WATER VALVE INSTALLATION DETAIL

NOT TO SCALE

9/7/16 SEB

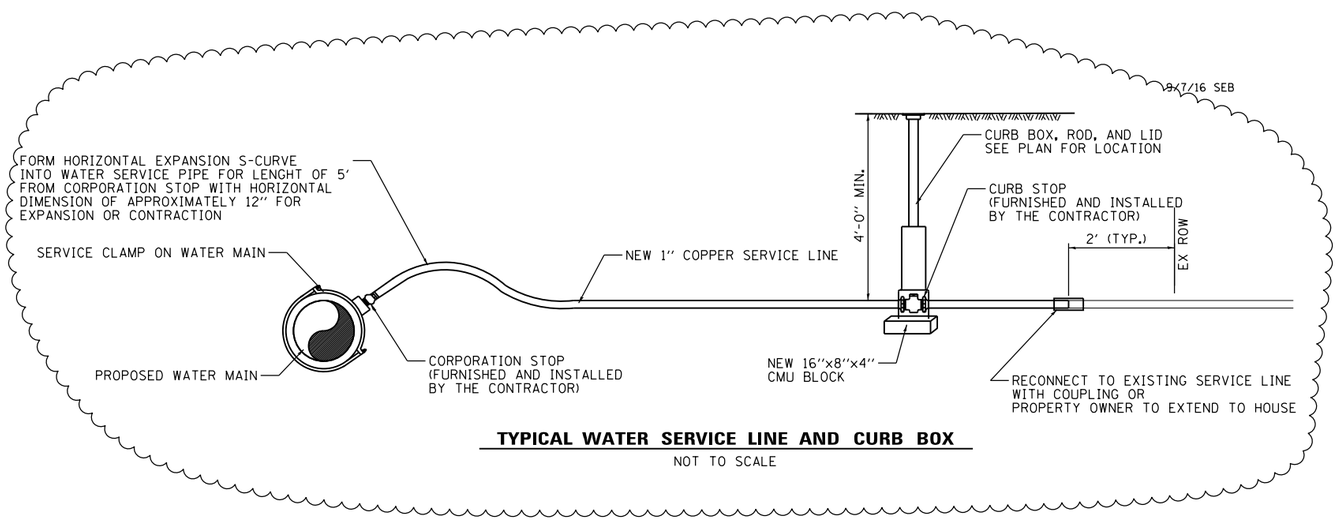

TYPICAL WATER SERVICE LINE AND CURB BOX

NOT TO SCALE

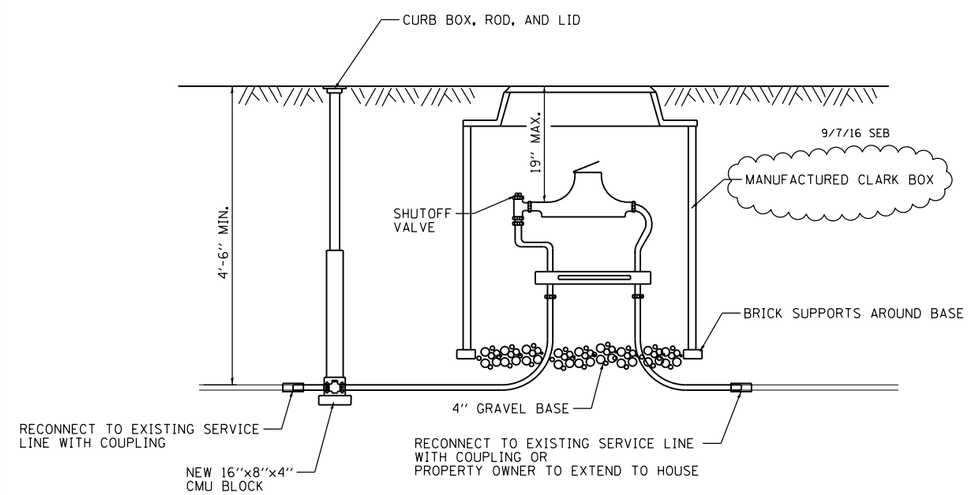

TYPICAL DOMESTIC METER VAULT TO BE MOVED

NOT TO SCALE

FILE NAME = F:\PROJECT FILES\MR0599 2016 Capital Maint\CADD\SHEETS\BID PACKAGE 2\BP2_038_SHT_MR0599B_DETAIL01.dgn

CITY OF QUINCY UTILITIES & ENGINEERING	USER NAME = sbange	DESIGNED -	REVISED - 9/7/16 - SEB	CITY OF QUINCY, ILLINOIS 2016 CAPITAL MAINTENANCE PROGRAM WARDS 4 AND 7	MISCELLANEOUS DETAILS – WATER MAIN DETAILS	CITY OF QUINCY PROJECT NO. MR-599B
		DRAWN -	REVISED -			JOB NO.
	PLOT SCALE = 40.0000 ' / in.	CHECKED -	REVISED -			
	PLOT DATE = 9/7/2016	DATE -	REVISED -		SCALE: SHEET NO. OF SHEETS STA. TO STA.	

TOTAL SHEETS	SHEET NO.
44	41

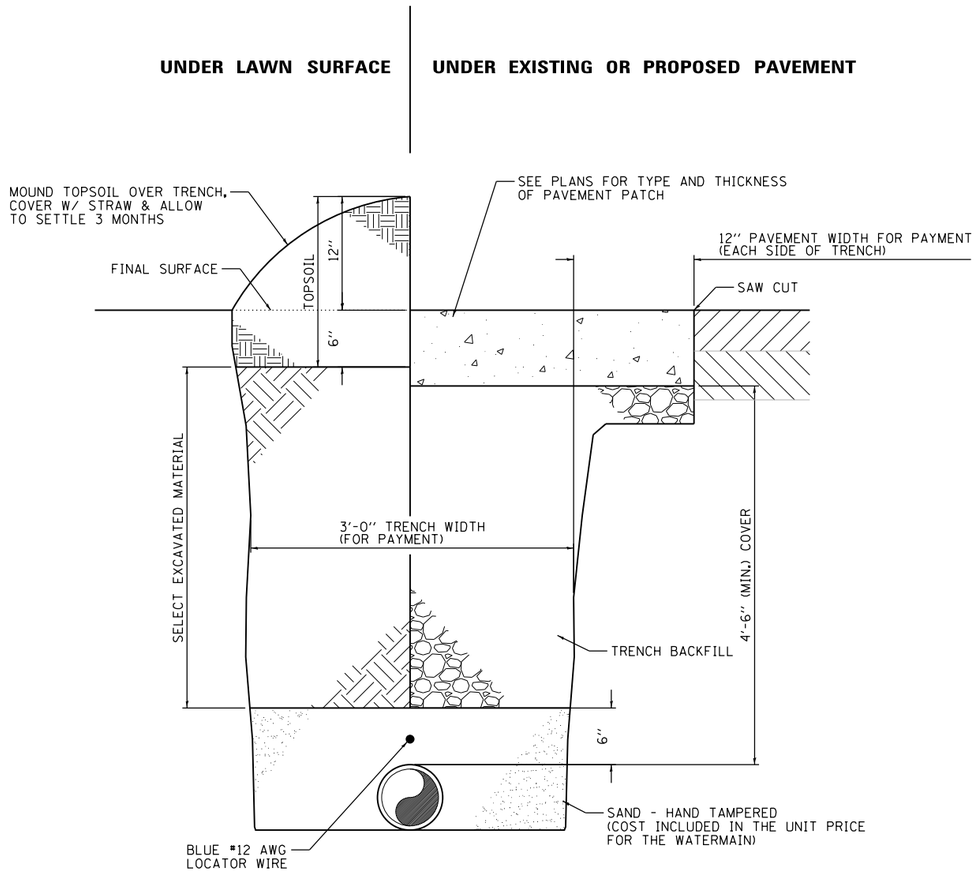

TYPICAL WATER MAIN TRENCH DETAIL

NOT TO SCALE

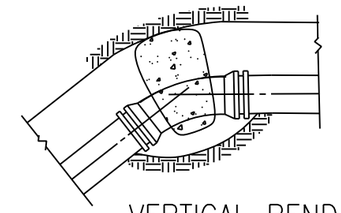

VERTICAL BEND

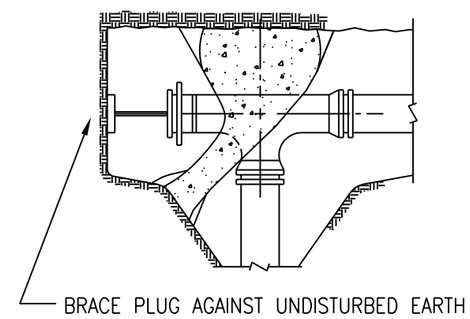

PLUGGED TEE

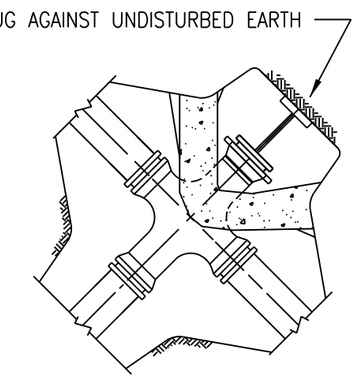

PLUGGED CROSS

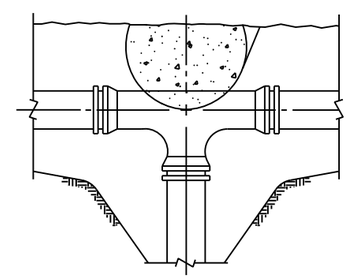

TEE

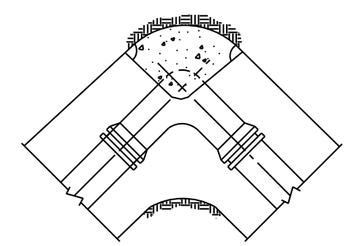

90° ELBOW

NOTE: ALL BLOCKS BEAR AGAINST UNDISTURBED EARTH.
ARROWS INDICATE DIRECTION OF THRUST.
ALL BLOCKS TO BE 3000 P.S.I CONCRETE.
ALL FITTINGS SHOWN IN PLAN EXCEPT VERTICAL BEND.

TYPICAL THRUST BLOCK INSTALLATIONS

STANDARD DRAWING NO.12

FILE NAME = F:\PROJECT FILES\MR0599 2016 Capital Mains\CADD SHEETS\BID PACKAGE 2\BP2 038 SHT MR0599B DETAIL01.dgn

CITY OF QUINCY UTILITIES & ENGINEERING	USER NAME = sbange	DESIGNED -	REVISED -	CITY OF QUINCY, ILLINOIS 2016 CAPITAL MAINTENANCE PROGRAM WARDS 4 AND 7	MISCELLANEOUS DETAILS – WATER MAIN DETAILS	CITY OF QUINCY PROJECT NO. MR-599B	TOTAL SHEETS / SHEET NO.
		DRAWN -	REVISED -			JOB NO.	44 / 42
	PLOT SCALE = 40.0001 ' / in.	CHECKED -	REVISED -				
	PLOT DATE = 9/1/2016	DATE -	REVISED -		SCALE: SHEET NO. OF SHEETS STA. TO STA.		

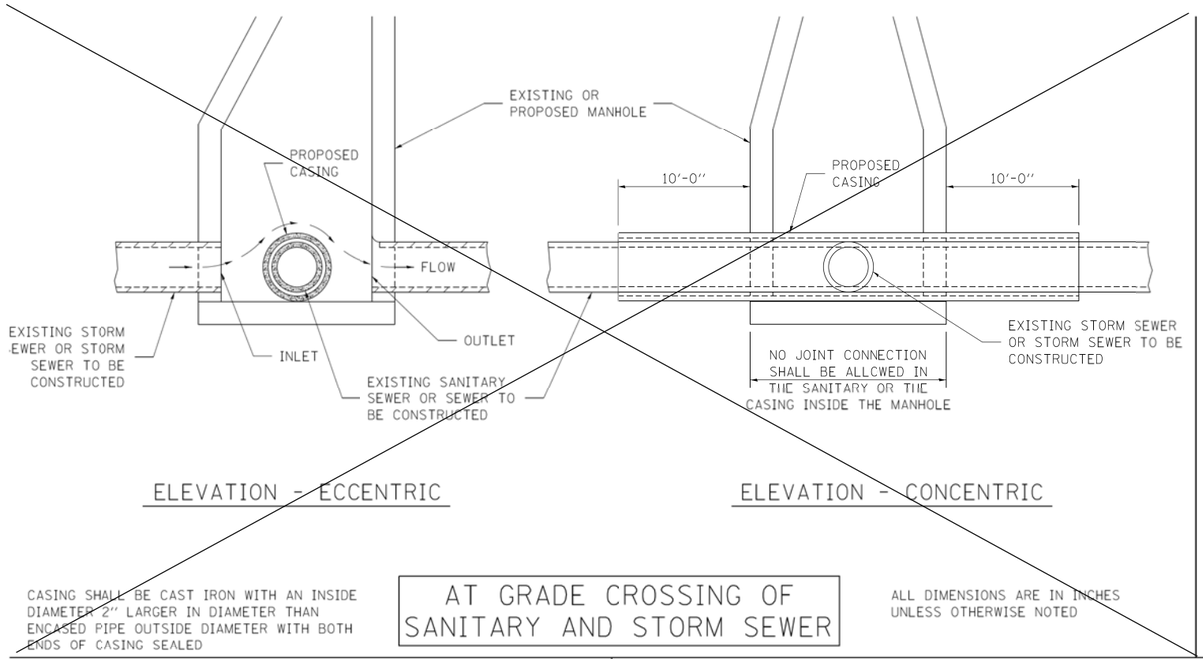

CASING SHALL BE CAST IRON WITH AN INSIDE DIAMETER 2" LARGER IN DIAMETER THAN ENCASED PIPE OUTSIDE DIAMETER WITH BOTH ENDS OF CASING SEALED

AT GRADE CROSSING OF SANITARY AND STORM SEWER

ALL DIMENSIONS ARE IN INCHES UNLESS OTHERWISE NOTED

THIS DETAIL IS FOR UNKNOWN UTILITIES UNLESS QUANTITIES ARE INCLUDED IN THE PLANS THE EXTRA WORK WILL BE PAID FOR IN ACCORDANCE WITH ARTICLE 109.04.

WHEN PROPOSED SEWER (OR WATER) IS LOCATED 10'-0" OR MORE FROM EXISTING WATER (OR SEWER) NO SPECIAL CONSTRUCTION REQUIRED.

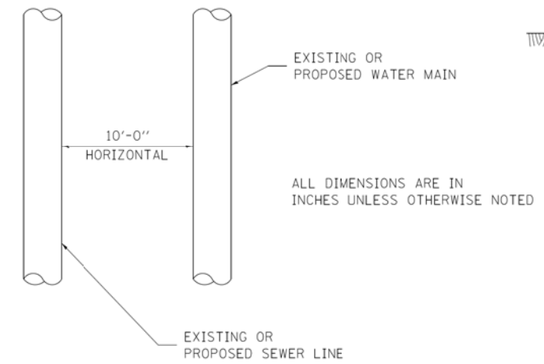

PLAN VIEW

WHEN PROPOSED SEWER (OR WATER) IS LOCATED LESS THAN 10'-0" FROM EXISTING WATER (OR SEWER) DETAILS BELOW SHALL APPLY.

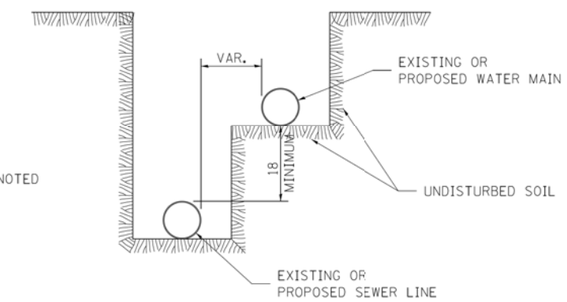

WATER AND SEWER HORIZONTAL SEPARATION REQUIREMENTS

POINT LOADS SHALL NOT BE ALLOWED BETWEEN SEWER OR SEWER CASING AND WATER MAIN

PROVIDE ADEQUATE SUPPORT FOR EXISTING WATER MAIN TO PREVENT DAMAGE DUE TO SETTLEMENT OF SEWER TRENCH

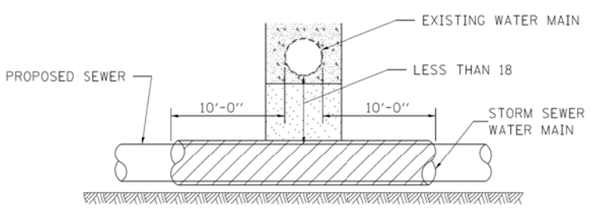

PROVIDE ADEQUATE SUPPORT FOR EXISTING WATER MAIN TO PREVENT DAMAGE DUE TO SETTLEMENT OF SEWER TRENCH

MAINTAIN 18 MINIMUM VERTICAL SEPARATION FOR 10 FT. HORIZONTALLY

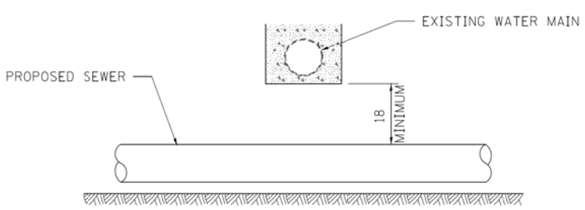

ALL DIMENSIONS ARE IN INCHES UNLESS OTHERWISE NOTED

PROPOSED SEWER LINE BELOW EXISTING WATER MAIN

PROVIDE ADEQUATE SUPPORT FOR EXISTING SEWER LINE TO PREVENT DAMAGE DUE TO SETTLEMENT

PLACE TRENCH BACKFILL FOR 10 FT. ON EITHER SIDE OF SEWER LINE

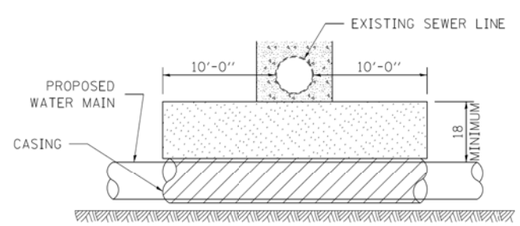

CASING SHALL BE CAST IRON WITH AN INSIDE DIAMETER 2" LARGER IN DIAMETER THAN ENCASED PIPE OUTSIDE DIAMETER WITH BOTH ENDS OF CASING SEALED

PROVIDE ADEQUATE SUPPORT FOR EXISTING WATER MAIN TO PREVENT DAMAGE DUE TO SETTLEMENT OF SEWER TRENCH

MAINTAIN 18 MINIMUM VERTICAL SEPARATION FOR 10 FT. HORIZONTALLY

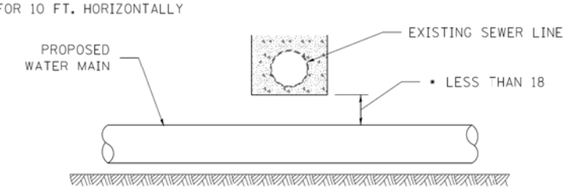

* NOT ALLOWED
MUST MAINTAIN 18 VERTICAL SEPARATION

ALL DIMENSIONS ARE IN INCHES UNLESS OTHERWISE NOTED

PROPOSED WATER MAIN BELOW EXISTING SEWER LINE

POINT LOADS SHALL NOT BE ALLOWED BETWEEN WATER MAIN OR WATER MAIN CASING AND SEWER

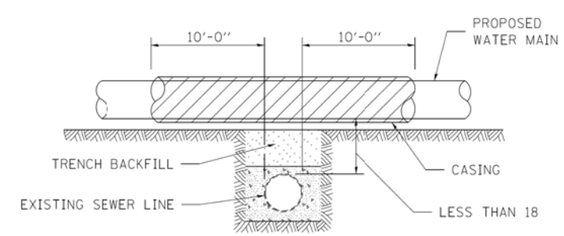

CASING SHALL BE CAST IRON WITH AN INSIDE DIAMETER 2" LARGER IN DIAMETER THAN ENCASED PIPE OUTSIDE DIAMETER WITH BOTH ENDS OF CASING SEALED

ALL DIMENSIONS ARE IN INCHES UNLESS OTHERWISE NOTED

PROPOSED WATER MAIN ABOVE EXISTING SEWER LINE

PROVIDE ADEQUATE SUPPORT FOR SEWER TO PREVENT SETTLING AND BREAKING THE WATER MAIN.

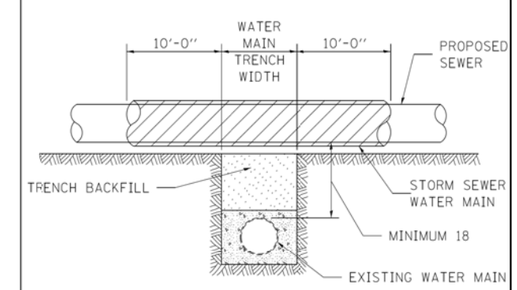

ALL DIMENSIONS ARE IN INCHES UNLESS OTHERWISE NOTED

EXISTING WATER MAIN BELOW PROPOSED SEWER LINE WITH MINIMUM 18 VERTICAL SEPARATION

FILE NAME = F:\PROJECT FILES\MR0599 2016 Capital Maint\CADD SHEETS\BID PACKAGE 2\BP2_038 SHT MR0599B DETAIL01.dgn

CITY OF QUINCY UTILITIES & ENGINEERING	USER NAME = sbange	DESIGNED -	REVISED -	CITY OF QUINCY, ILLINOIS 2016 CAPITAL MAINTENANCE PROGRAM WARDS 4 AND 7	MISCELLANEOUS DETAILS – WATER MAIN DETAILS
		DRAWN -	REVISED -		
	PLOT SCALE = 40.0000 ' / in.	CHECKED -	REVISED -		SCALE: SHEET NO. OF SHEETS STA. TO STA.
	PLOT DATE = 9/1/2016	DATE -	REVISED -		

CITY OF QUINCY PROJECT NO. MR-599B	TOTAL SHEETS	SHEET NO.
JOB NO.	44	43

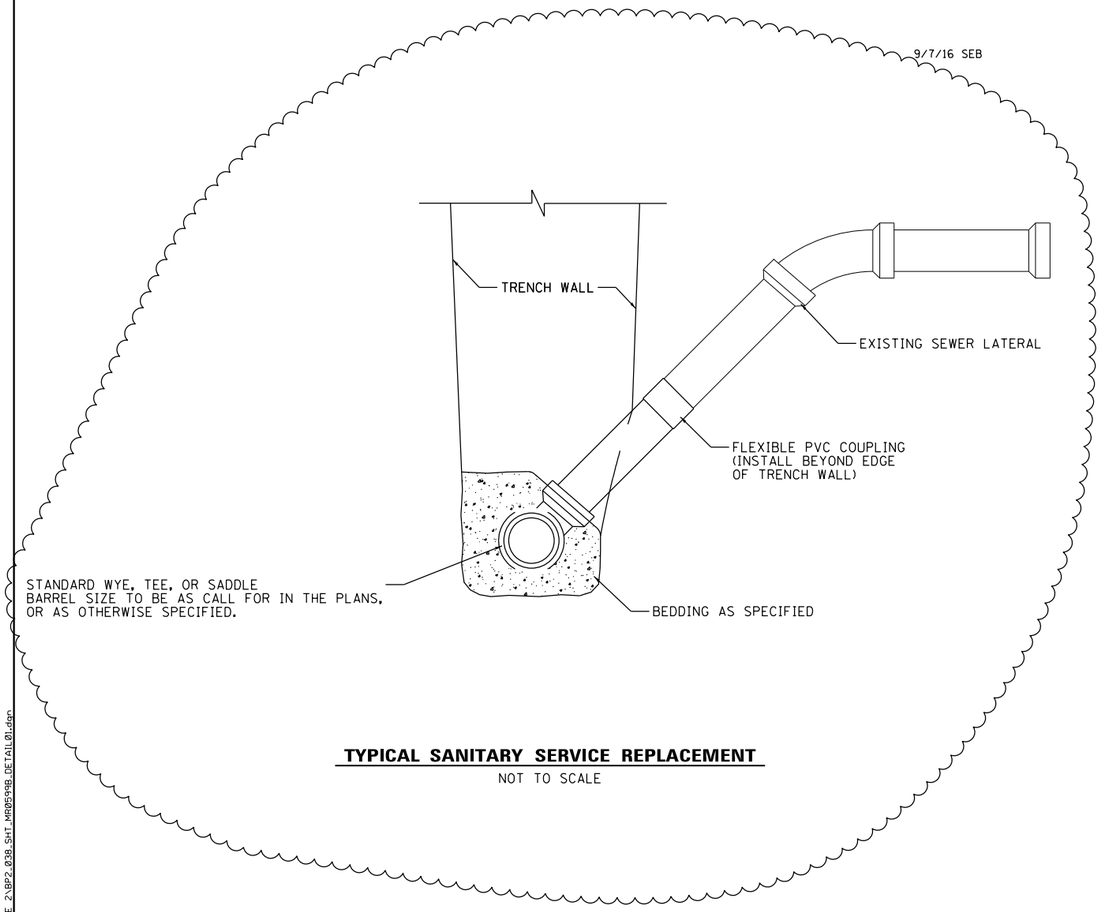

TYPICAL SANITARY SERVICE REPLACEMENT

NOT TO SCALE

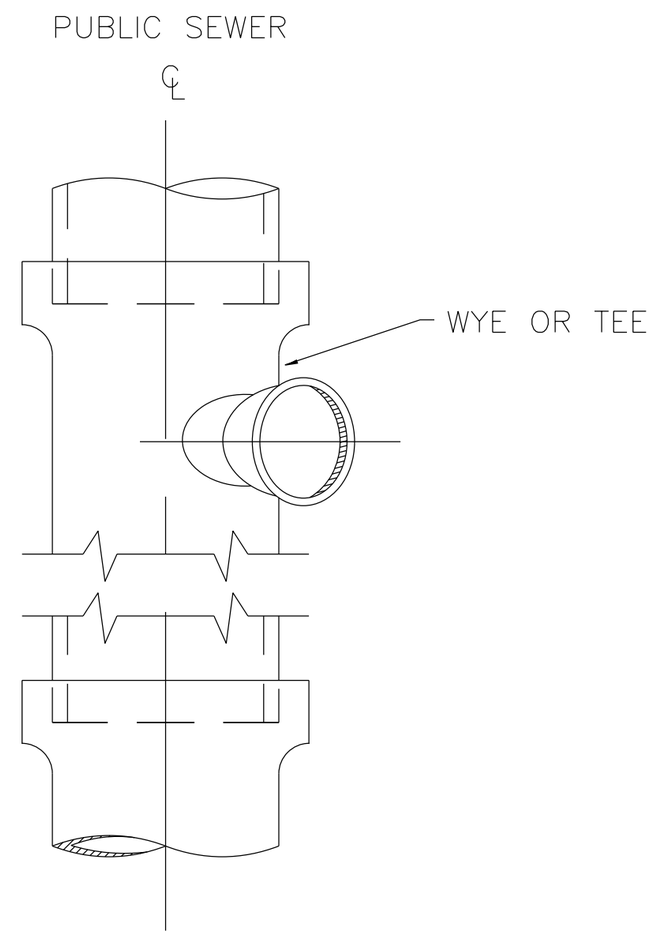

PLAN OF SEWER
AT HOUSE INLET

WHERE TEES AND WYES ARE NOT PROVIDED, TAPPING SADDLES WILL BE REQUIRED. AXIS OF OUTLET PLACED AT 45° SLOPE WITH HORIZONTAL. OUTLET TO BE PROVIDED WITH STOPPER

TYPICAL HOUSE INLET SANITARY

STANDARD DRAWING NO.8san

FILE NAME = F:\PROJECT FILES\MR0599 2016 Capital Main\CADD SHEETS\BID PACKAGE 2\BP2.038.SHT MR0599B DETAIL01.dgn

CITY OF QUINCY UTILITIES & ENGINEERING	USER NAME = sbange	DESIGNED -	REVISED - 9/7/16 - SEB	CITY OF QUINCY, ILLINOIS 2016 CAPITAL MAINTENANCE PROGRAM WARDS 4 AND 7	MISCELLANEOUS DETAILS – SANITARY SEWER DETAILS	CITY OF QUINCY PROJECT NO. MR-599B
		DRAWN -	REVISED -			JOB NO.
	PLOT SCALE = 40.0000 ' / in.	CHECKED -	REVISED -			
	PLOT DATE = 9/7/2016	DATE -	REVISED -		SCALE: SHEET NO. OF SHEETS STA. TO STA.	

TOTAL SHEETS	SHEET NO.
44	44

ABV	ABOVE
A/C	ACCESS CONTROL
AC	ACRE
ADJ	ADJUST
AS	AERIAL SURVEYS
AGG	AGGREGATE
AH	AHEAD
APT	APARTMENT
ASPH	ASPHALT
AUX	AUXILIARY
AGS	AUXILIARY GAS VALVE (SERVICE)
AVE	AVENUE
AX	AXIS OF ROTATION
BK	BACK
B-B	BACK TO BACK
BKPL	BACKPLATE
B	BARN
BARR	BARRICADE
BGN	BEGIN
BM	BENCHMARK
BIND	BINDER
BIT	BITUMINOUS
BTM	BOTTOM
BLVD	BOULEVARD
BRK	BRICK
BBOX	BUFFALO BOX
BLDG	BUILDING
CIP	CAST IRON PIPE
CB	CATCH BASIN
C-C	CENTER TO CENTER
CL	CENTERLINE OR CLEARANCE
CL-E	CENTERLINE TO EDGE
CL-F	CENTERLINE TO FACE
CTS	CENTERS
CERT	CERTIFIED
CHSLD	CHISELED
CS	CITY STREET
CP	CLAY PIPE
CLSD	CLOSED
CLID	CLOSED LID
CT	COAT OR COURT
COMB	COMBINATION
C	COMMERCIAL BUILDING
CE	COMMERCIAL ENTRANCE
CONC	CONCRETE
CONST	CONSTRUCT
CONTD	CONTINUED
CONT	CONTINUOUS
COR	CORNER
CORR	CORRUGATED
CMP	CORRUGATED METAL PIPE
CNTY	COUNTY
CH	COUNTY HIGHWAY
CSE	COURSE
XSECT	CROSS SECTION
m^3	CUBIC METER
mm^3	CUBIC MILLIMETER
CU YD	CUBIC YARD
CULV	CULVERT
C&G	CURB & GUTTER
D	DEGREE OF CURVE
DC	DEPRESSED CURVE
DET	DETECTOR
DIA	DIAMETER
DIST	DISTRICT
DOM	DOMESTIC
DBL	DOUBLE
DSEL	DOWNSTREAM ELEVATION
DSFL	DOWNSTREAM FLOWLINE
DR	DRAINAGE OR DRIVE
DI	DRAINAGE INLET OR DROP INLET
DRV	DRIVEWAY
DCT	DUCT
EA	EACH
EB	EASTBOUND
EOP	EDGE OF PAVEMENT
E-CL	EDGE TO CENTERLINE
E-E	EDGE TO EDGE
EL	ELEVATION
ENTR	ENTRANCE
EXC	EXCAVATION
EX	EXISTING
EXPWAY	EXPRESSWAY
E	EXTERNAL DISTANCE OF HORIZONTAL CURVE
E	OFFSET DISTANCE TO VERTICAL CURVE
F-F	FACE TO FACE
FA	FEDERAL AID
FAI	FEDERAL AID INTERSTATE
FAP	FEDERAL AID PRIMARY
FAS	FEDERAL AID SECONDARY
FAUS	FEDERAL AID URBAN SECONDARY
FP	FENCE POST
FE	FIELD ENTRANCE
FH	FIRE HYDRANT
FL	FLOW LINE
FB	FOOT BRIDGE
FDN	FOUNDATION
FR	FRAME
F&G	FRAME & GRATE
FRWAY	FREEWAY
GAL	GALLON
GALV	GALVANIZED
G	GARAGE
GM	GAS METER
GV	GAS VALVE
GRAN	GRANULAR
GR	GRATE
GRVL	GRAVEL
GND	GROUND
GUT	GUTTER
GP	GUY POLE
GW	GUY WIRE
HH	HANDHOLE
HATCH	HATCHING
HD	HEAD
HDW	HEADWALL
HDUTY	HEAVY DUTY
ha	HECTARE
HMA	HOT MIX ASPHALT
HWY	HIGHWAY
HORIZ	HORIZONTAL
HSE	HOUSE
IL	ILLINOIS
IMP	IMPROVEMENT
IN DIA	INCH DIAMETER
INL	INLET
INST	INSTALLATION
IDS	INTERSECTION DESIGN STUDY
INV	INVERT
IP	IRON PIPE
IR	IRON ROD
JT	JOINT
kg	KILOGRAM
km	KILOMETER
LS	LANDSCAPING
LN	LANE
LT	LEFT
LP	LIGHT POLE
LGT	LIGHTING
LF	LINEAL FEET OR LINEAR FEET
L	LITER OR CURVE LENGTH
LC	LONG CHORD
LNG	LONGITUDINAL
L SUM	LUMP SUM
MACH	MACHINE
MB	MAIL BOX
MH	MANHOLE
MATL	MATERIAL
MED	MEDIAN
m	METER
METH	METHOD
M	MID-ORDINATE
mm	MILLIMETER
mm DIA	MILLIMETER DIAMETER
MIX	MIXTURE
MBH	MOBILE HOME
MOD	MODIFIED
MFT	MOTOR FUEL TAX
N & BC	NAIL & BOTTLE CAP
N & C	NAIL & CAP
N & W	NAIL & WASHER
NOAA	NATIONAL OCEANIC ATMOSPHERIC ADMINISTRATION
NC	NORMAL CROWN
NB	NORTHBOUND
NE	NORTHEAST
NW	NORTHWEST
OLID	OPEN LID
PAT	PATTERN
PVD	PAVED
PVMT	PAVEMENT
PM	PAVEMENT MARKING
PED	PEDESTAL
PNT	POINT
PC	POINT OF CURVATURE
PI	POINT OF INTERSECTION OF HORIZONTAL CURVE
PRC	POINT OF REVERSE CURVE
PT	POINT OF TANGENCY
POT	POINT ON TANGENT
POLYETH	POLYETHYLENE
PCC	PORTLAND CEMENT CONCRETE
PP	POWER POLE OR PRINCIPAL POINT
PRM	PRIME
PE	PRIVATE ENTRANCE
PROF	PROFILE
PGL	PROFILE GRADELINE
PROJ	PROJECT
P.C.	PROPERTY CORNER
PL	PROPERTY LINE
PR	PROPOSED
R	RADIUS
RR	RAILROAD
RRS	RAILROAD SPIKE
RPS	REFERENCE POINT STAKE
REF	REFLECTIVE
RCCP	REINFORCED CONCRETE CULVERT PIPE
REINF	REINFORCEMENT
REM	REMOVAL
RC	REMOVE CROWN
REP	REPLACEMENT
REST	RESTAURANT
RESURF	RESURFACING
RET	RETAINING
RT	RIGHT
ROW	RIGHT-OF-WAY
RD	ROAD
RDWY	ROADWAY
RTE	ROUTE
SAN	SANITARY
SANS	SANITARY SEWER
SEC	SECTION
SEED	SEEDING
SHAP	SHAPING
S	SHED
SH	SHEET
SHLD	SHOULDER
SW	SIDEWALK OR SOUTHWEST
SIG	SIGNAL
SOD	SODDING
SM	SOLID MEDIAN
SB	SOUTHBOUND
SE	SOUTHEAST
SPL	SPECIAL
SD	SPECIAL DITCH
SQ FT	SQUARE FEET
m^2	SQUARE METER
mm^2	SQUARE MILLIMETER
SQ YD	SQUARE YARD
STB	STABILIZED
STD	STANDARD
SBI	STATE BOND ISSUE
SR	STATE ROUTE
STA	STATION
SPBGR	STEEL PLATE BEAM GUARDRAIL
SS	STORM SEWER
STY	STORY
ST	STREET
STR	STRUCTURE
e	SUPERELEVATION RATE
S.E. RUN.	SUPERELEVATION RUNOFF LENGTH
SURF	SURFACE
SMK	SURVEY MARKER
T	TANGENT DISTANCE
T.R.	TANGENT RUNOUT DISTANCE
TEL	TELEPHONE
TB	TELEPHONE BOX
TP	TELEPHONE POLE
TEMP	TEMPORARY
TBM	TEMPORARY BENCH MARK
TD	TILE DRAIN
TBE	TO BE EXTENDED
TBR	TO BE REMOVED
TBS	TO BE SAVED
TWP	TOWNSHIP
TR	TOWNSHIP ROAD
TS	TRAFFIC SIGNAL
TSCB	TRAFFIC SIGNAL CONTROL BOX
TSC	TRAFFIC SYSTEMS CENTER
TRVS	TRANSVERSE
TRVL	TRAVEL
TRN	TURN
TY	TYPE
T-A	TYPE A
TYP	TYPICAL
UNDGND	UNDERGROUND
USGS	U.S. GEOLOGICAL SURVEY
USEL	UPSTREAM ELEVATION
USFL	UPSTREAM FLOWLINE
UTIL	UTILITY
VBOX	VALVE BOX
VV	VALVE VAULT
VLT	VAULT
VEH	VEHICLE
VP	VENT PIPE
VERT	VERTICAL
VC	VERTICAL CURVE
VPC	VERTICAL POINT OF CURVATURE
VPI	VERTICAL POINT OF INTERSECTION
VPT	VERTICAL POINT OF TANGENCY
WM	WATER METER
WV	WATER VALVE
WMAIN	WATER MAIN
WB	WESTBOUND
WILDFL	WILDFLOWERS
W	WITH
WO	WITHOUT

Illinois Department of Transportation

PASSED January 1, 2011

Michael Brand

ENGINEER OF POLICY AND PROCEDURES

APPROVED January 1, 2011

ENGINEER OF DESIGN AND ENVIRONMENT

ISSUED 1-1-97

DATE	REVISIONS
1-1-11	Updated abbreviations
	and symbols.
1-1-08	Updated abbreviations
	and symbols.

STANDARD SYMBOLS, ABBREVIATIONS AND PATTERNS

(Sheet 1 of 8)

STANDARD 000001–06

ADJUSTMENT ITEMS

	EX	PR
Structure To Be Adjusted		ADJ
Structure To Be Cleaned		C
Main Structure To Be Filled		FM
Structure To Be Filled		F
Structure To Be Filled Special		FSP
Structure To Be Removed		R
Structure To Be Reconstructed		REC
Structure To Be Reconstructed Special		RSP
Frame and Grate To Be Adjusted		A
Frame and Lid To Be Adjusted		A
Domestic Service Box To Be Adjusted		A
Valve Vault To Be Adjusted		A
Special Adjustment		SP
Item To Be Abandoned		AB
Item To Be Moved		M
Item To Be Relocated		REL
Pavement Removal and Replacement		

Illinois Department of Transportation

PASSED January 1, 2011
Michael Brand
ENGINEER OF POLICY AND PROCEDURES

APPROVED January 1, 2011
ENGINEER OF DESIGN AND ENVIRONMENT

ISSUED 1-1-97

ALIGNMENT ITEMS

	EX	PR
Baseline		
Centerline		
Centerline Break Circle		
Baseline Symbol		
Centerline Symbol		
PI Indicator		
Point Indicator		
Horizontal Curve Data (Half Size)	CURVE P.I. STA= Δ= D= R= T= L= E= e= T.R.= S.E. RUN= P.C. STA= P.T. STA=	CURVE P.I. STA= Δ= D= R= T= L= E= e= T.R.= S.E. RUN= P.C. STA= P.T. STA=

BOUNDARIES ITEMS

	EX	PR
Dashed Property Line		
Solid Property/Lot Line		
Section/Grant Line		
Quarter Section Line		
Quarter/Quarter Section Line		
County/Township Line		
State Line		
Iron Pipe Found		
Iron Pipe Set		
Survey Marker		
Property Line Symbol		
Same Ownership Symbol (Half Size)		
Northwest Quarter Corner (Half Size)		
Section Corner (Half Size)		
Southeast Quarter Corner (Half Size)		

CONTOUR ITEMS

	EX	PR
Approx. Index Line		
Approx. Intermediate Line		
Index Contour		
Intermediate Contour		

DRAINAGE ITEMS

	EX	PR
Channel or Stream Line		
Culvert Line		
Grading & Shaping Ditches		
Drainage Boundary Line		
Paved Ditch		
Aggregate Ditch		
Pipe Underdrain		
Storm Sewer		
Flowline		
Ditch Check		
Headwall		
Inlet		
Manhole		
Summit		
Roadway Ditch Flow		
Swale		
Catch Basin		
Culvert End Section		
Water Surface Indicator		
Riprap		

STANDARD SYMBOLS, ABBREVIATIONS AND PATTERNS

(Sheet 2 of 8)

STANDARD 000001-06

EROSION & SEDIMENT CONTROL ITEMS

	EX	PR
Cleaning & Grading Limits		
Dike		
Erosion Control Fence		
Perimeter Erosion Barrier		
Temporary Fence		
Ditch Check Temporary		
Ditch Check Permanent		
Inlet & Pipe Protection		
Sediment Basin		
Erosion Control Blanket		
Fabric Formed Concrete Revetment Mat		
Turf Reinforcement Mat		
Mulch Temporary		
Mulch Method 1		
Mulch Method 2 Stabilized		
Mulch Method 3 Hydraulic		

NON–HIGHWAY IMPROVEMENT ITEMS

	EX	PR
Noise Attn./Levee		
Field Line		
Fence		
Base of Levee		
Mailbox		
Multiple Mailboxes		
Pay Telephone		
Advertising Sign		

LANDSCAPING ITEMS

	EX	PR
Contour Mounding Line		
Fence		
Fence Post		
Shrubs		
Mowline		
Perennial Plants		
Seeding Class 2		
Seeding Class 2A		
Seeding Class 4		
Seeding Class 4 & 5 Combined		

EXISTING LANDSCAPING ITEMS (contd.)

	EX	PR
Seeding Class 5		
Seeding Class 7		
Seedlings Type 1		
Seedlings Type 2		
Sodding		
Mowstake w/Sign		
Tree Trunk Protection		
Evergreen Tree	E	
Shade Tree	E	+

LIGHTING

	EX	PR
Duct		
Conduit		
Electrical Aerial Cable	A	A
Electrical Buried Cable	L	L
Controller		
Underpass Luminaire		
Power Pole		

Illinois Department of Transportation

PASSED January 1, 2011

Michael Brand
ENGINEER OF POLICY AND PROCEDURES

APPROVED January 1, 2011

ENGINEER OF DESIGN AND ENVIRONMENT

ISSUED 1-1-97

STANDARD SYMBOLS, ABBREVIATIONS AND PATTERNS

(Sheet 3 of 8)

STANDARD 000001–06

LIGHTING (contd.)

	EX	PR
Pull Point	Ⓟ	Ⓟ
Handhole		
Heavy Duty Handhole	H	H
Junction Box		
Light Unit Comb.		
Electrical Ground		
Traffic Flow Arrow		
High Mast Pole (Half Size)		
Light Unit-1		

PAVEMENT (MISC.)

	EX	PR
Keyed Long. Joint		
Keyed Long. Joint w/Tie Bars		
Sawed Long. Joint w/Tie Bars		
Bituminous Shoulder		
Bituminous Taper		
Stabilized Driveway		
Widening		

PAVEMENT MARKINGS

	EX	PR
Bike Lane Symbol		
Bike Lane Text		BIKE LANE
Handicap Symbol		
RR Crossing		RR
Raised Marker Amber 1 Way		
Raised Marker Amber 2 Way		
Raised Marker Crystal 1 Way		
Two Way Turn Left		
Shoulder Diag. Pattern		
Skip-Dash White		
Skip-Dash Yellow		
Stop Line		
Solid Line		
Double Centerline		
Dotted Lines		
CL 2Ln 2Way RRPM 12.2 m (40') o.c.		
CL 2Ln 2Way RRPM 80' (24.4 m) o.c.		
CL Multilane Div. RRPM 40' (12.2 m) o.c.		
CL Multilane Div. RRPM 80' (24.4 m) o.c.		
CL Multilane Div. Dbl. RRPM 80' (24.4 m) o.c.		
CL Multilane Undiv.		
Two Way Turn Left Line		

Illinois Department of Transportation

PASSED January 1, 2011
Michael Brand
ENGINEER OF POLICY AND PROCEDURES

APPROVED January 1, 2011
Scott E. Stokes
ENGINEER OF DESIGN AND ENVIRONMENT

ISSUED 1-1-97

STANDARD SYMBOLS, ABBREVIATIONS AND PATTERNS

(Sheet 4 of 8)

STANDARD 000001–06

PAVEMENT MARKINGS (contd.)

	EX	PR
Urban Combination Left		
Urban Combination Right		
Urban Left Turn Arrow		
Urban Right Turn Arrow		
Urban Left Turn Only		ONLY
Urban Right Turn Only		ONLY
Urban Thru Only		ONLY
Urban U-Turn		
Urban Combined U-Turn		
Rural Combination Left		
Rural Combination Right		
Rural Left Turn Arrow		
Rural Right Turn Arrow		
Rural Left Turn Only		ONLY
Rural Right Turn Only		ONLY
Rural Thru Only		ONLY

RAILROAD ITEMS

	EX	PR
Abandoned Railroad		
Railroad		
Railroad Point		
Control Box		
Crossing Gate		
Flashing Signal		
Railroad Cant. Mast Arm		
Crossbuck		

REMOVAL ITEMS

	EX	PR
Removal Tic		
Bituminous Removal		
Hatch Pattern		
Tree Removal Single		

RIGHT OF WAY ITEMS

	EX	PR
Future ROW Corner Monument		
ROW Marker		
ROW Line		
Easement		
Temporary Easement		

Illinois Department of Transportation

PASSED January 1, 2011

Michael Brand
ENGINEER OF POLICY AND PROCEDURES

APPROVED January 1, 2011

ENGINEER OF DESIGN AND ENVIRONMENT

ISSUED 1-1-97

STANDARD SYMBOLS, ABBREVIATIONS AND PATTERNS

(Sheet 5 of 8)

STANDARD 000001–06

RIGHT OF WAY ITEMS (contd.)

	EX	PR
Access Control Line	AC	AC
Access Control Line & ROW	AC	AC
Access Control Line & ROW with Fence	AR	AC
Excess ROW Line		XS

ROADWAY PLAN ITEMS

	EX	PR
Cable Barrier		
Concrete Barrier		
Edge of Pavement		
Bit Shoulders, Medians and C&G Line		
Aggregate Shoulder		
Sidewalks, Driveways		
Guardrail		
Guardrail Post		
Traffic Sign		
Corrugated Median		
Impact Attenuator		
North Arrow with District Office (Half Size)	N	
Match Line		STA. 45+00
Slope Limit Line		
Typical Cross-Section Line		

ROADWAY PROFILES

	EX	PR
P.I. Indicator		
Point Indicator		
Earthworks Balance Point		
Begin Point		
Vert. Curve Data	VPI = ELEV= L = E =	VPI = ELEV= L = E =
Ditch Profile Left Side		
Ditch Profile Right Side		
Roadway Profile Line		
Storm Sewer Profile Left Side		
Storm Sewer Profile Right Side		

SIGNING ITEMS

	EX	PR
Cone, Drum or Barricade		
Barricade Type II		
Barricade Type III		
Barricade With Edge Line		
Flashing Light Sign		
Panels I		
Panels II		
Direction of Traffic		
Sign Flag (Half Size)		

SIGNING ITEMS (contd.)

	EX	PR
Reverse Left W1-4L (Half Size)		
Reverse Right W1-4R (Half Size)		
Two Way Traffic Sign W6-3 (Half Size)		
Detour Ahead W20-2(0) (Half Size)		DETOUR AHEAD
Left Lane Closed Ahead W20-5L(0) (Half Size)		LEFT LANE CLOSED AHEAD
Right Lane Closed Ahead W20-5R(0) (Half Size)		RIGHT LANE CLOSED AHEAD
Road Closed Ahead W20-3(0) (Half Size)		ROAD CLOSED AHEAD
Road Construction Ahead W20-1-(0) (Half Size)		ROAD CONSTRUCTION AHEAD
Single Lane Ahead (Half Size)		SINGLE LANE AHEAD
Transition Left W4-2L (Half Size)		
Transition Right W4-2R (Half Size)		

Illinois Department of Transportation

PASSED January 1, 2011
Michael Brand
ENGINEER OF POLICY AND PROCEDURES

APPROVED January 1, 2011
ENGINEER OF DESIGN AND ENVIRONMENT

ISSUED 1-1-97

STANDARD SYMBOLS, ABBREVIATIONS AND PATTERNS

(Sheet 6 of 8)

STANDARD 000001-06

SIGNING ITEMS (contd.)

	EX	PR
One Way Arrow Lrg. W1-6-(0) (Half Size)		
Two Way Arrow Large W1-7-(0) (Half Size)		
Detour M4-10L-(0) (Half Size)		DETOUR
Detour M4-10R-(0) (Half Size)		DETOUR
One Way Left R6-1L (Half Size)		ONE WAY
One Way Right R6-1R (Half Size)		ONE WAY
Left Turn Lane R3-I100L (Half Size)		LEFT TURN LANE
Keep Left R4-7AL (Half Size)		KEEP LEFT
Keep Left R4-7BL (Half Size)		KEEP LEFT
Keep Right R4-7AR (Half Size)		KEEP RIGHT
Keep Right R4-7BR (Half Size)		KEEP RIGHT
Stop Here On Red R10-6-AL (Half Size)		STOP HERE ON RED
Stop Here On Red R10-6-AR (Half Size)		STOP HERE ON RED
No Left Turn R3-2 (Half Size)		
No Right Turn R3-1 (Half Size)		
Road Closed R11-2 (Half Size)		ROAD CLOSED
Road Closed Thru Traffic R11-2 (Half Size)		ROAD CLOSED TO THRU TRAFFIC

STRUCTURES ITEMS

	EX	PR
Box Culvert Barrel		
Box Culvert Headwall		
Bridge Pier		
Bridge		
Retaining Wall		
Temporary Sheet Piling		

TRAFFIC SHEET ITEMS

	EX	PR
Cable Number		
Left Turn Green	G	G
Left Turn Yellow	Y	Y
Signal Backplate		
Signal Section 8" (200 mm)		
Signal Section 12" (300 mm)		
Walk/Don't Walk Letters	DW W	DW W
Walk/Don't Walk Symbols		

TRAFFIC SIGNAL ITEMS

	EX	PR
Galv. Steel Conduit		
Underground Cable		
Detector Loop Line		
Detector Loop Large		
Detector Loop Small		
Detector Loop Quadrapole		

Illinois Department of Transportation

PASSED January 1, 2011

Michael Brand

ENGINEER OF POLICY AND PROCEDURES

APPROVED January 1, 2011

ENGINEER OF DESIGN AND ENVIRONMENT

ISSUED 1-1-97

STANDARD SYMBOLS, ABBREVIATIONS AND PATTERNS

(Sheet 7 of 8)

STANDARD 000001–06

TRAFFIC SIGNAL ITEMS (contd.)

	EX	PR
Detector Raceway	"E"	
Aluminum Mast Arm		
Steel Mast Arm		
Veh. Detector Magnetic		
Conduit Splice		
Controller		
Gulfbox Junction		
Wood Pole		
Temp. Signal Head		
Handhole		
Double Handhole		
Heavy Duty Handhole	H	H
Junction Box	J	J
Ped. Pushbutton Detector		
Ped. Signal Head		
Power Pole Service		
Priority Veh. Detector		
Signal Head		
Signal Head w/Backplate		
Signal Post		
Closed Circuit TV	C	C
Video Detector System	V	V

Illinois Department of Transportation

PASSED January 1, 2011
Michael Brand
ENGINEER OF POLICY AND PROCEDURES
APPROVED January 1, 2011
ENGINEER OF DESIGN AND ENVIRONMENT

ISSUED 1-1-97

UNDERGROUND UTILITY ITEMS

	EX	PR	ABANDONED
Cable TV	CTV	CTV	CTV
Electric Cable	E	E	E
Fiber Optic	FO	FO	FO
Gas Pipe	G	G	G
Oil Pipe	O	O	O
Sanitary Sewer			
Telephone Cable	T	T	T
Water Pipe	W	W	W

UTILITIES ITEMS

	EX	PR
Controller		
Double Handhole		
Fire Hydrant		
GuyWire or Deadman Anchor		
Handhole		
Heavy Duty Handhole	H	H
Junction Box	J	J
Light Pole		
Manhole		
Pipeline Warning Sign		
Power Pole		
Power Pole with Light		
Sanitary Sewer Cleanout		
Splice Box Above Ground		
Telephone Splice Box Above Ground		
Telephone Pole		

UTILITY ITEMS (contd.)

	EX	PR
Traffic Signal		
Traffic Signal Control Box	TS	
Water Meter		
Water Meter Valve Box		
Profile Line		
Aerial Power Line	A A	A A

VEGETATION ITEMS

	EX	PR
Deciduous Tree		
Bush or Shrub		
Evergreen Tree		
Stump		
Orchard/Nursery Line		
Vegetation Line		
Woods & Bush Line		

WATER FEATURE ITEMS

	EX	PR
Stream or Drainage Ditch		
Waters Edge		
Water Surface Indicator		
Water Point		
Disappearing Ditch		
Marsh		
Marsh/Swamp Boundary		

STANDARD SYMBOLS, ABBREVIATIONS AND PATTERNS

(Sheet 8 of 8)

STANDARD 000001-06

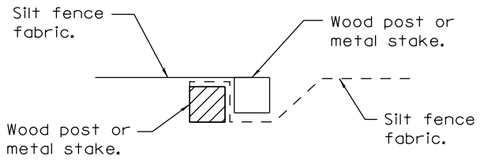

Place end-post (stake) of first silt fence adjacent to end-post (stake) of second silt fence with fabric positioned as swown.

STEP 1

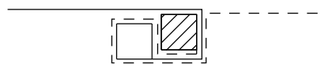

Rotate posts (stakes) together 180° clockwise and drive both posts (stakes) 18 (450) into ground.

STEP 2

ATTACHING TWO SILT FILTER FENCES

(Not applicable for J-hooks)

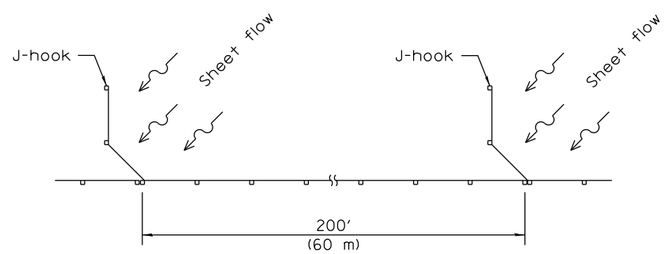

SILT FILTER J-HOOK PLACEMENT

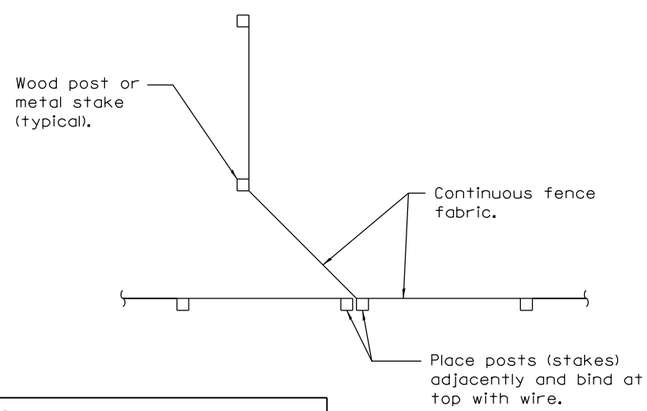

J-HOOK

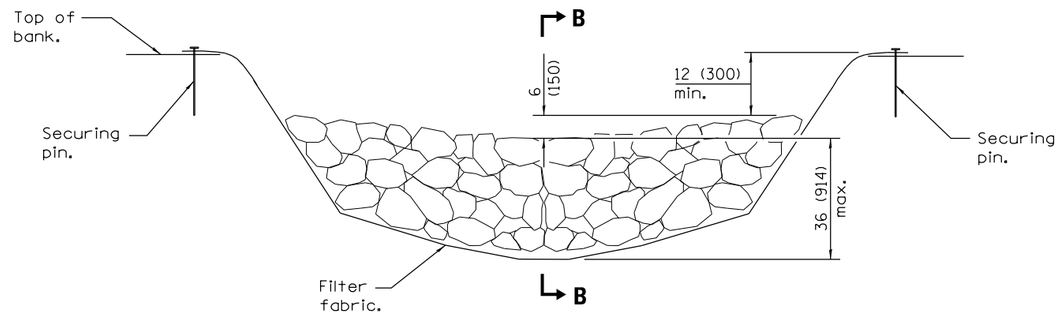

ELEVATION

- When the ditch check is within the clear zone and the road is open to traffic, the traffic approach slope of the aggregate shall be 1:4 (V:H).

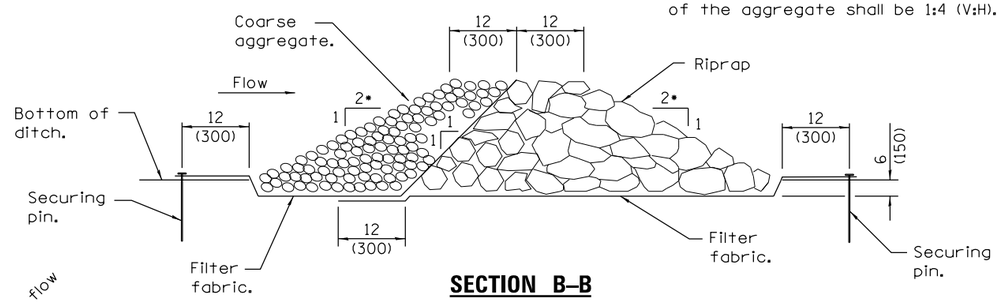

SECTION B–B

AGGREGATE DITCH CHECK

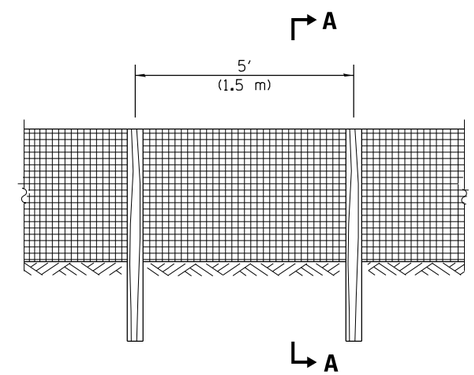

ELEVATION

SILT FILTER FENCE AS A PERIMETER EROSION BARRIER

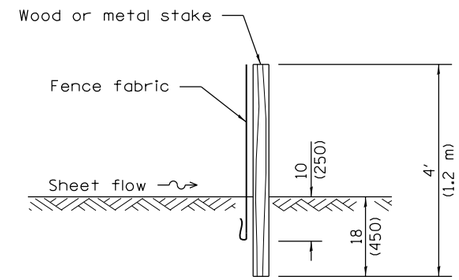

SLICE METHOD

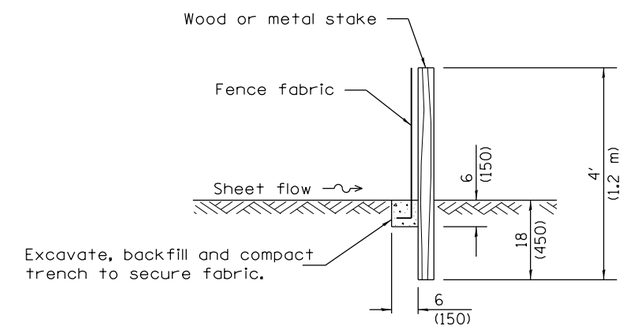

TRENCH METHOD

SECTION A–A

GENERAL NOTES

The installation details and dimensions shown for perimeter erosion barriers shall also apply for inlet and pipe protection.

All dimensions are in inches (millimeters) unless otherwise shown.

Illinois Department of Transportation

PASSED January 1, 2013
Michael Brand
ENGINEER OF POLICY AND PROCEDURES
APPROVED January 1, 2013
ENGINEER OF DESIGN AND ENVIRONMENT

ISSUED 1-1-97

DATE	REVISIONS
1-1-13	Corrected notation for
	flowline (℄) on SEDIMENT
	BASIN ELEVATION.
1-1-12	Omitted hay/straw perimeter
	barrier. Added SLICE METHOD
	to SECTION A-A.

TEMPORARY EROSION CONTROL SYSTEMS

(Sheet 1 of 2)

STANDARD 280001–07

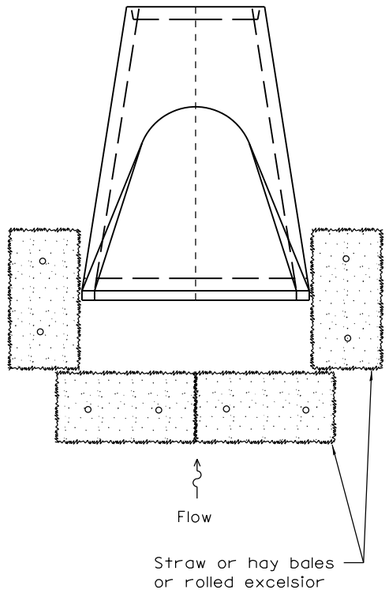

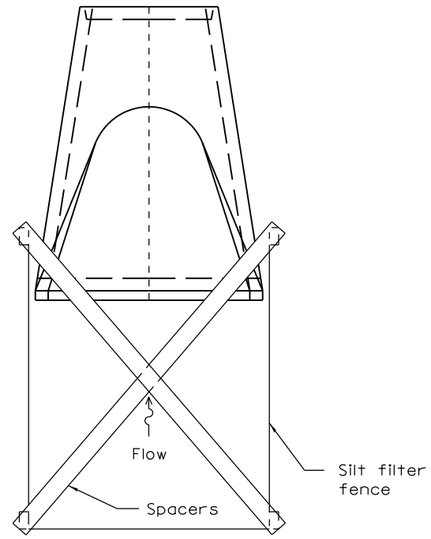

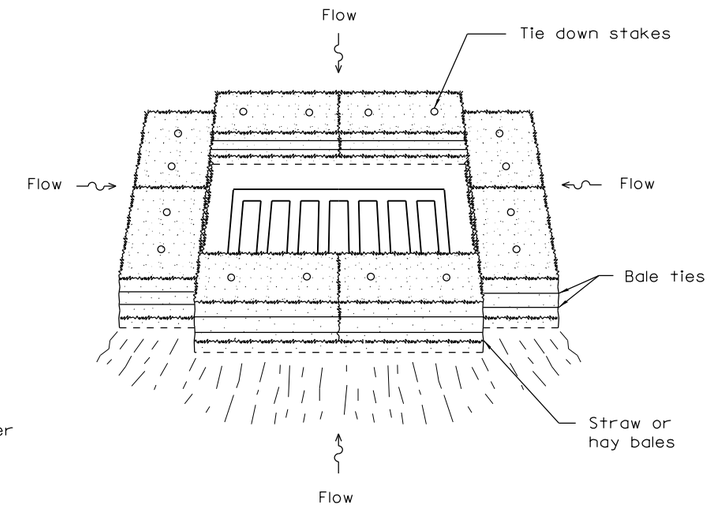

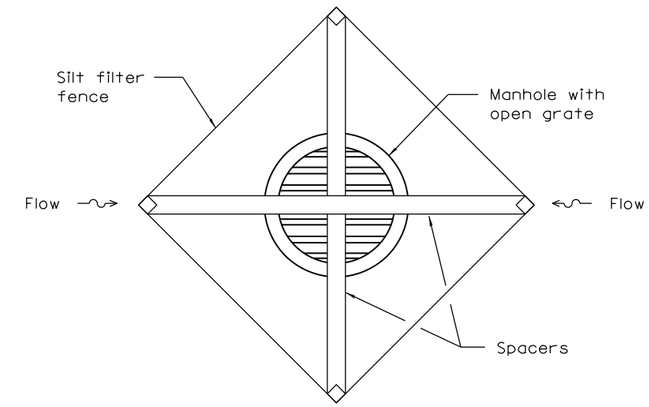

INLET AND PIPE PROTECTION

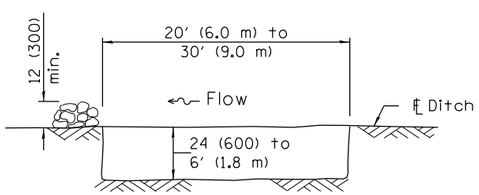

The performance of the basin will improve if put into a series.

ELEVATION

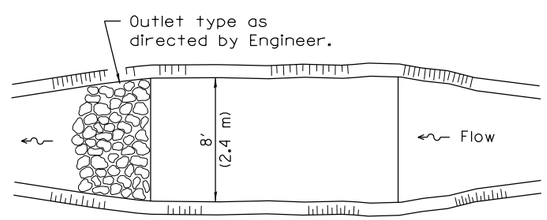

The long dimension should be parallel with the direction of the flow. Accumulated silt shall be removed anytime the basins become 75% filled.

PLAN

SEDIMENT BASIN

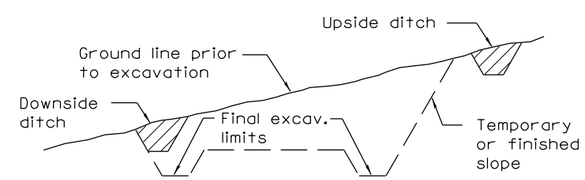

TYPICAL CUT CROSS-SECTION

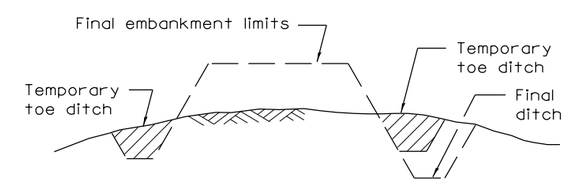

TYPICAL FILL CROSS-SECTION

TEMPORARY DITCHES FOR CUT & FILL SECTIONS

Illinois Department of Transportation

PASSED January 1, 2013

Michael Brand

ENGINEER OF POLICY AND PROCEDURES

APPROVED January 1, 2013

ENGINEER OF DESIGN AND ENVIRONMENT

ISSUED 1-1-97

TEMPORARY EROSION CONTROL SYSTEMS

(Sheet 2 of 2)

STANDARD 280001-07

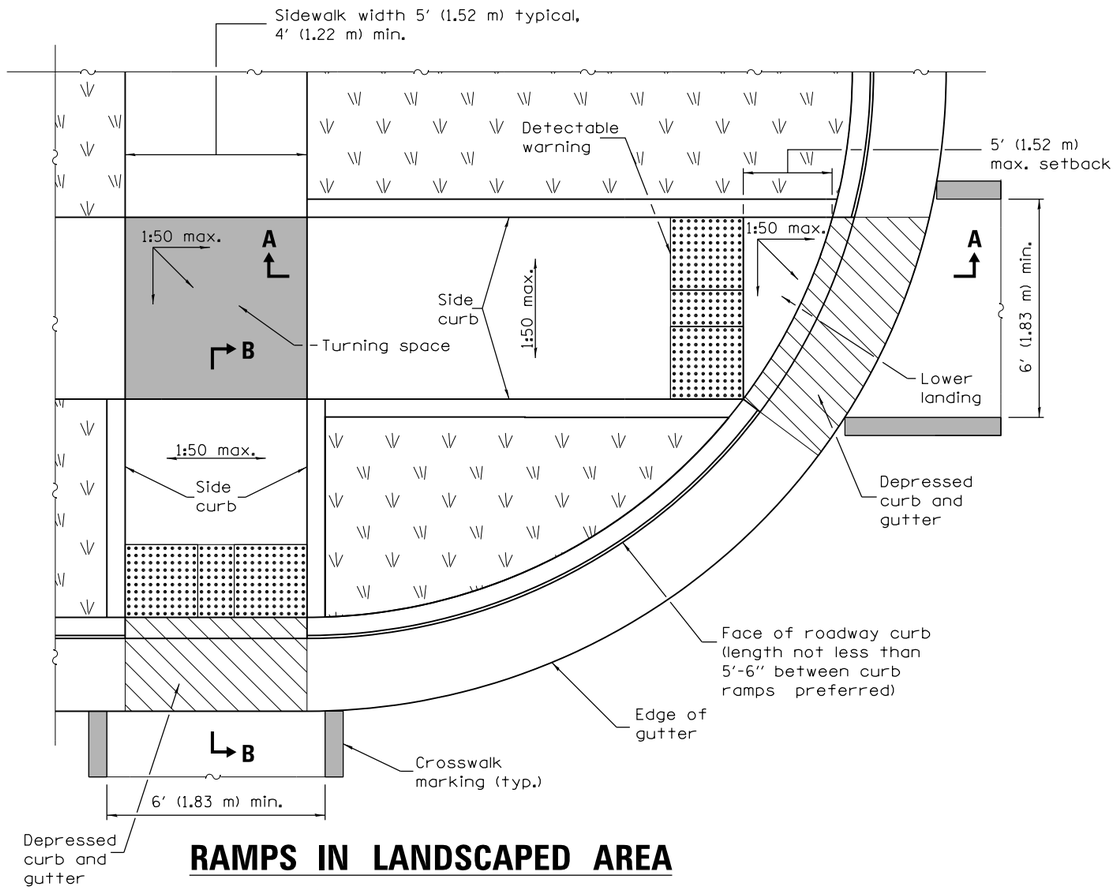

RAMPS IN LANDSCAPED AREA

SETBACK ≤ 5′

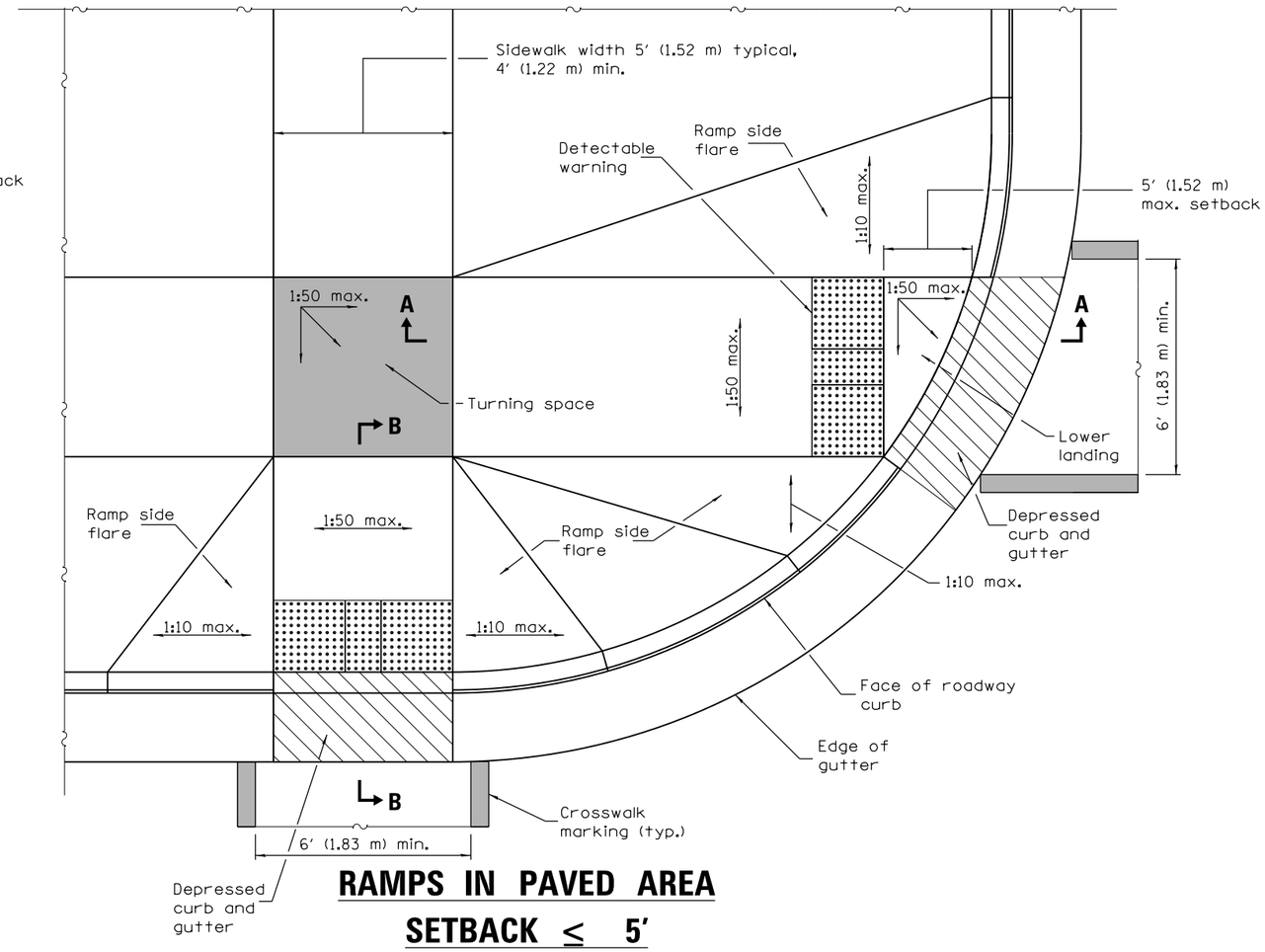

RAMPS IN PAVED AREA

SETBACK ≤ 5′

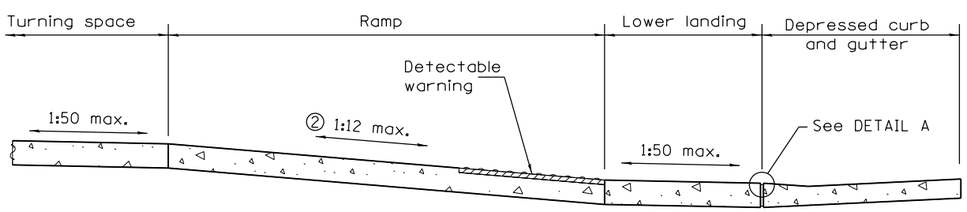

SECTION A–A

② The running slope of the curb ramp shall not require the ramp length to exceed 15′ (4.5 m).

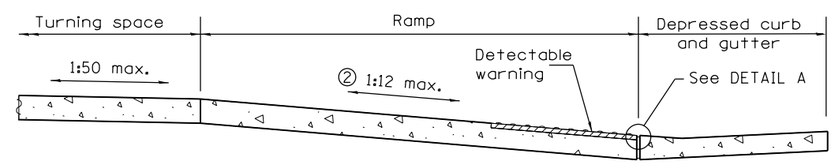

SECTION B–B

② The running slope of the curb ramp shall not require the ramp length to exceed 15′ (4.5 m).

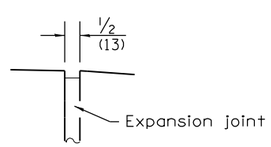

DETAIL A

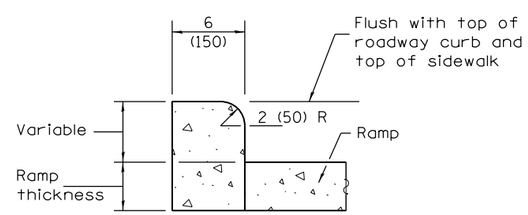

SIDE CURB DETAIL

See Sheet 2 for GENERAL NOTES.

DATE	REVISIONS
1-1-15	① not appl. to int. sidewalks.
	Rev. gen. notes. Ch'd Upper
	landing to Turning space.
1-1-13	Widened crosswalk markings
	to 6′ (1.83 m) min. inside
	dimension. Rev. Gen. Notes.

PERPENDICULAR CURB RAMPS FOR SIDEWALKS

(Sheet 1 of 2)

STANDARD 424001–08

Illinois Department of Transportation

PASSED January 1, 2015

Michael Brand

ENGINEER OF POLICY AND PROCEDURES

APPROVED January 1, 2015

ENGINEER OF DESIGN AND ENVIRONMENT

ISSUED 1-1-97

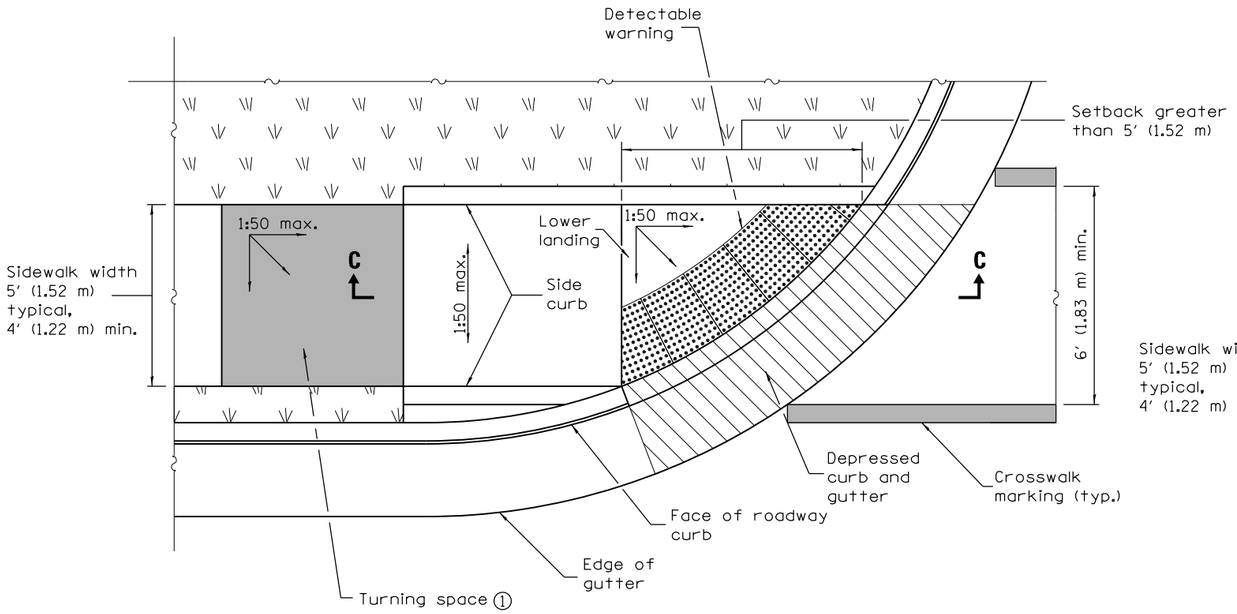

RAMP IN LANDSCAPED AREA
SETBACK > 5′

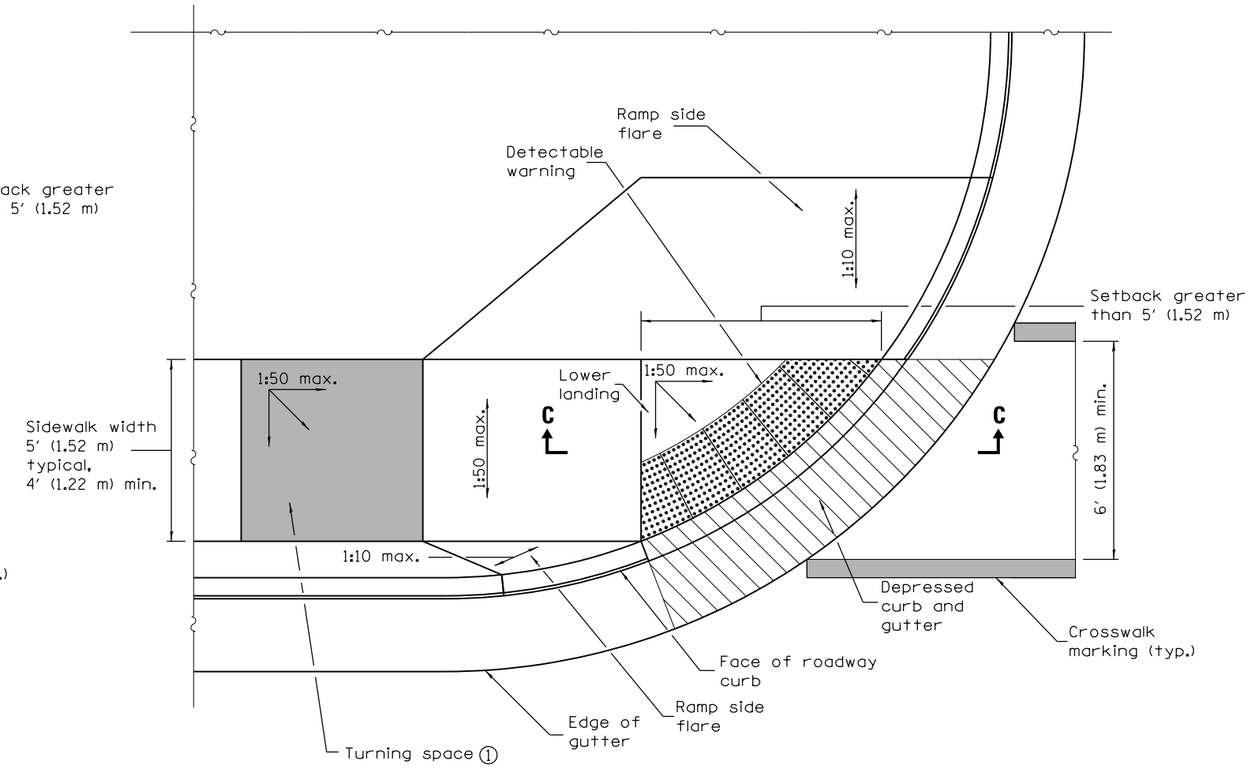

RAMP IN PAVED AREA
SETBACK > 5′

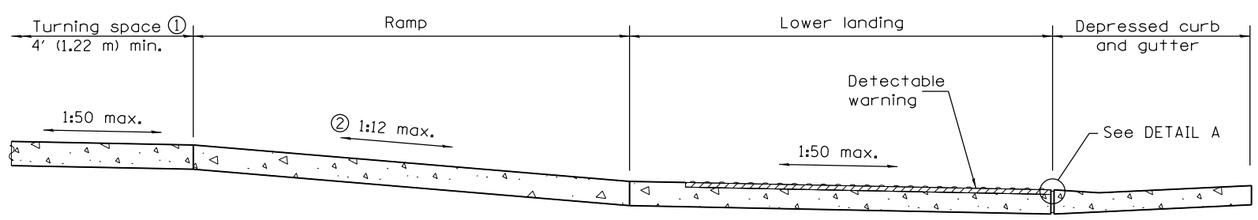

SECTION C–C

① Turning space not required for ramp slopes flatter than 1:20.

② The running slope of the curb ramp shall not require the ramp length to exceed 15′ (4.5 m).

GENERAL NOTES

All slope ratios are expressed as units of vertical displacement to units of horizontal displacement (V:H).

Where the turning space is constrained on a side opposite a ramp, the minimum length of the turning space in the direction of the ramp-run shall be 5′ (1.52 m).

Where 1:50 maximum slope is shown, 1:64 is preferred.

See Standard 606001 for details of depressed curb adjacent to curb ramp.

All dimensions are in inches (millimeters) unless otherwise shown.

Illinois Department of Transportation

PASSED January 1, 2015
Michael Brand
ENGINEER OF POLICY AND PROCEDURES
APPROVED January 1, 2015
ENGINEER OF DESIGN AND ENVIRONMENT

ISSUED 1-1-97

PERPENDICULAR CURB RAMPS FOR SIDEWALKS

(Sheet 2 of 2)

STANDARD 424001–08

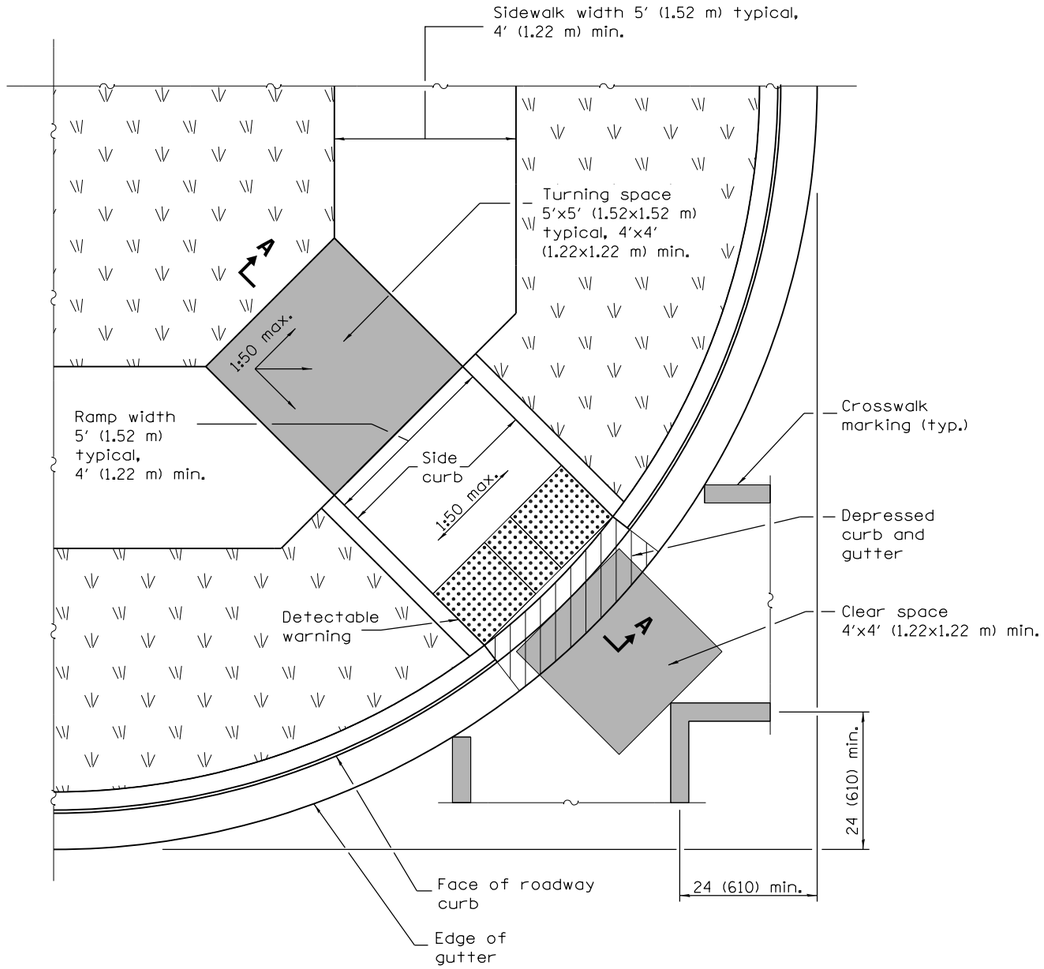

RAMP IN LANDSCAPED AREA

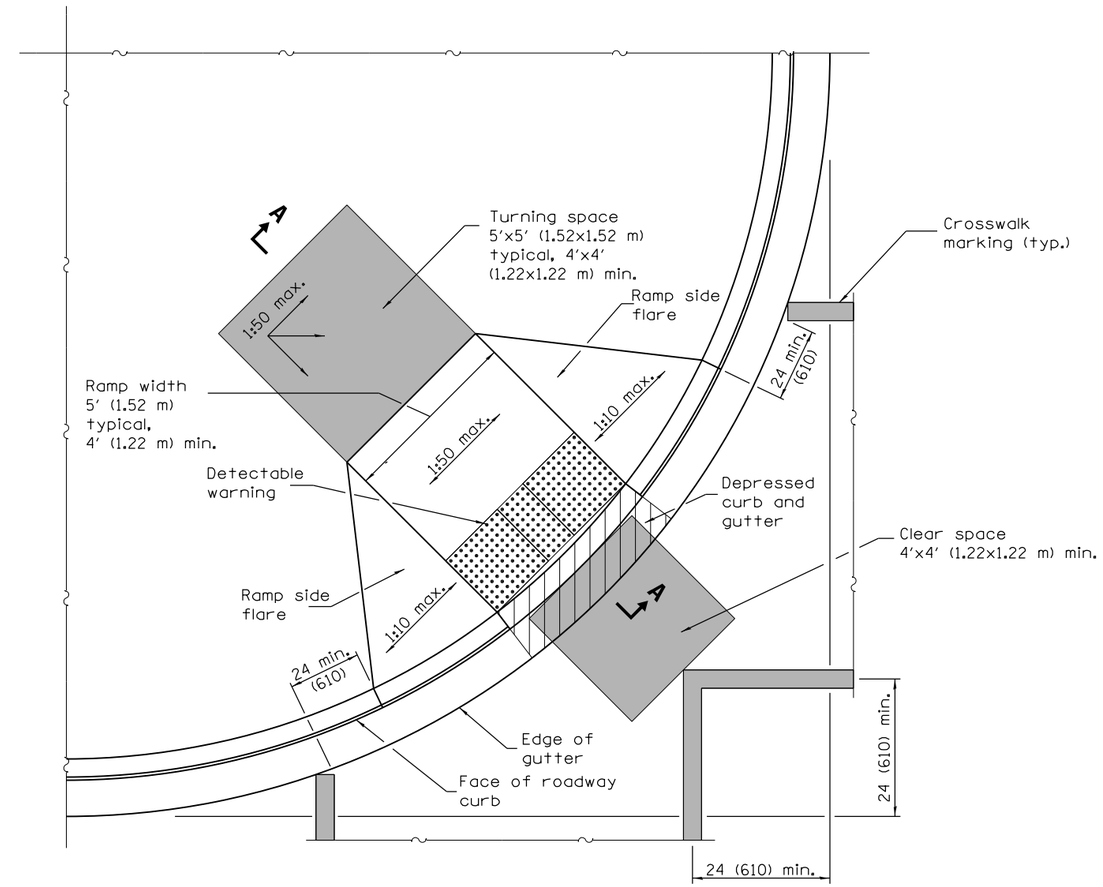

RAMP IN PAVED AREA

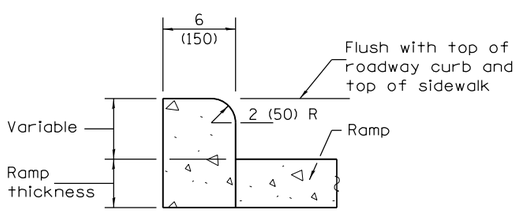

SIDE CURB DETAIL

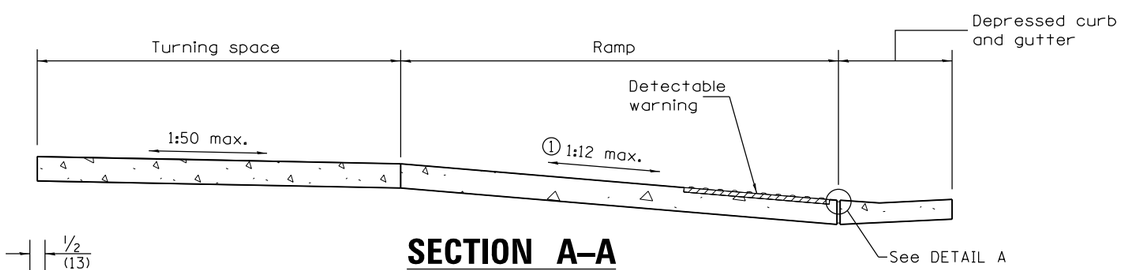

SECTION A–A

① The running slope of the curb ramp shall not require the ramp length to exceed 15′ (4.5 m).

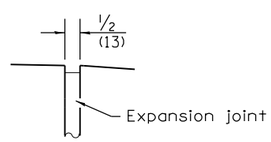

DETAIL A

GENERAL NOTES

This Standard shall only be used for curb radii of 20 ft. (6.1 m) or greater.

Where the turning space is constrained on a side opposite a ramp, the minimum length of the turning space in the direction of the ramp-run shall be 5′ (1.52 m).

Where 1:50 maximum slope is shown, 1:64 is preferred.

All slope ratios are expressed as units of vertical displacement to units of horizontal displacement (V:H).

See Standard 606001 for details of depressed curb adjacent to curb ramp.

All dimensions are in inches (millimeters) unless otherwise shown.

Illinois Department of Transportation

PASSED January 1, 2015
Michael Brand
ENGINEER OF POLICY AND PROCEDURES
APPROVED January 1, 2015
ENGINEER OF DESIGN AND ENVIRONMENT

ISSUED 1-1-12

DATE	REVISIONS
1-1-15	Changed 'Upper landing' to
	'Turning space'. Added note
	reg. const. turning space.
1-1-13	Revised General Notes.

DIAGONAL CURB RAMPS FOR SIDEWALKS

STANDARD 424006–02

CLASS C

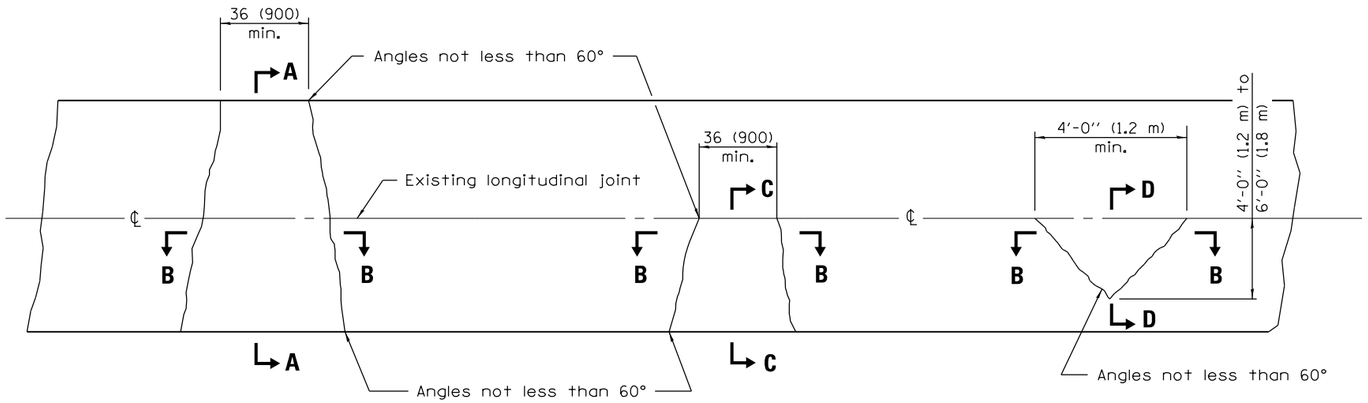

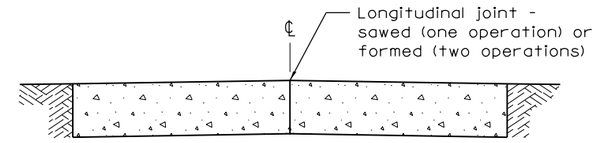

SECTION A–A

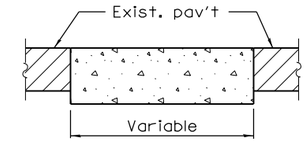

SECTION B–B

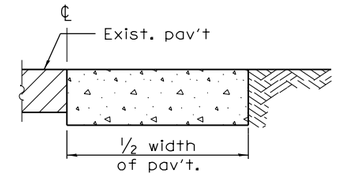

SECTION C–C

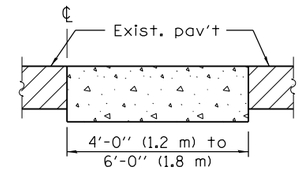

SECTION D–D

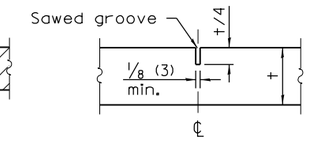

DETAIL OF SAWED CONTRACTION JOINT

Note:
Longitudinal joints shall be as detailed on Standard 420001, except tie bars are not required for patches 20'-0" (6.0 m) or less in length.

CLASS D

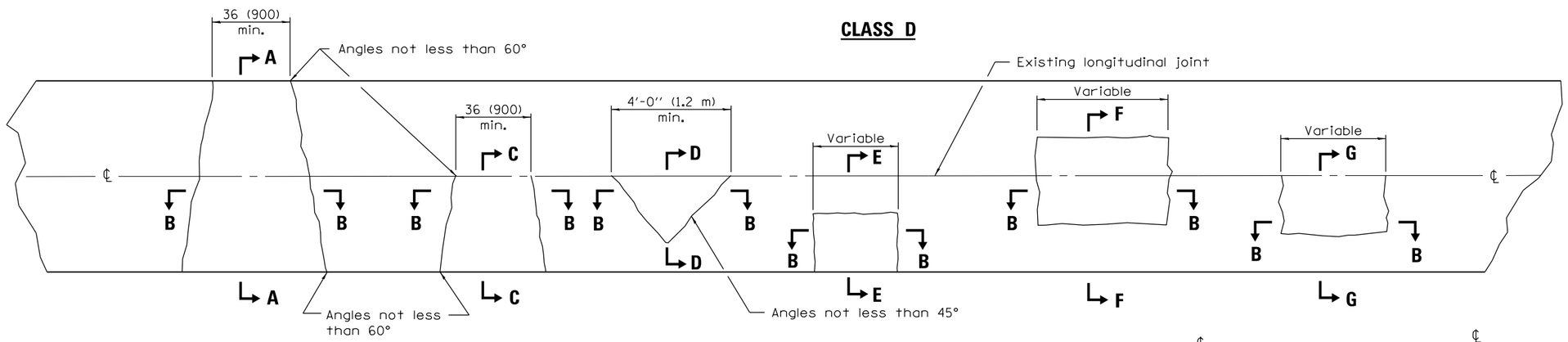

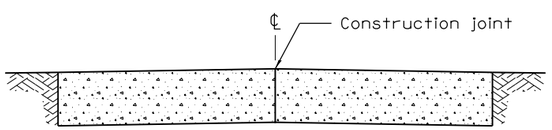

SECTION A–A
(Built in two operations)

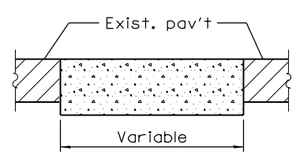

SECTION B–B

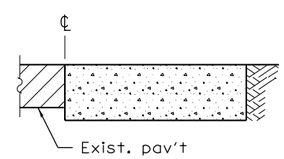

SECTION C–C

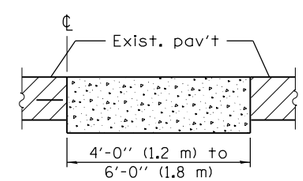

SECTION D–D

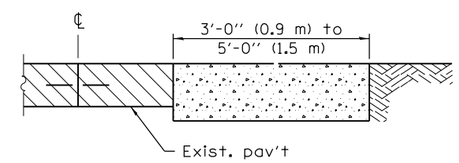

SECTION E–E

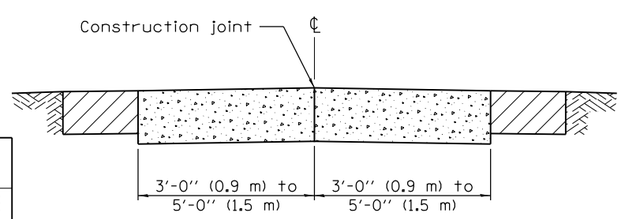

SECTION F–F
(Built in two operations)

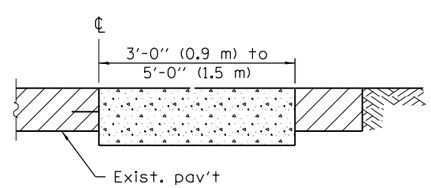

SECTION G–G

GENERAL NOTES

Existing tie bars shall be either cut or removed. Marginal bars shall be cut.

All dimensions are in inches (millimeters) unless otherwise shown.

Illinois Department of Transportation

PASSED January 1, 2008
ENGINEER OF POLICY AND PROCEDURES
APPROVED January 1, 2008
ENGINEER OF DESIGN AND ENVIRONMENT

ISSUED 1-1-97

DATE	REVISIONS
1-1-08	Switched units to English (metric).
1-1-07	Revised Note for Class C patches.

CLASS C and D PATCHES

STANDARD 442201–03

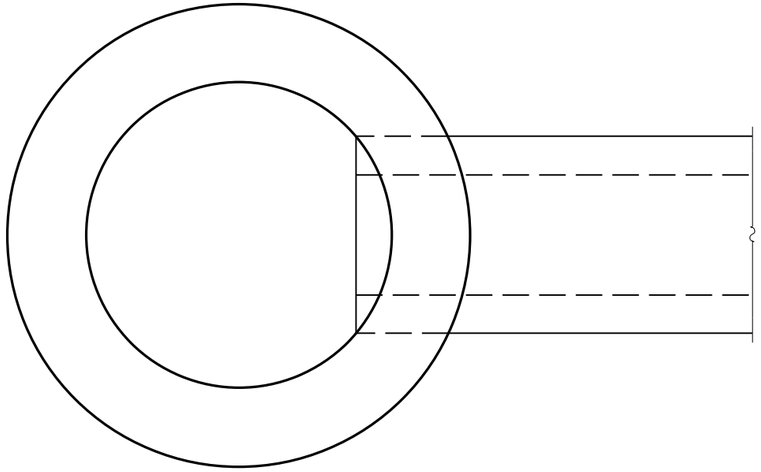

PLAN

ALTERNATE MATERIALS FOR WALLS	T
BRICK MASONRY	8 (200)
CAST-IN-PLACE CONCRETE	6 (150)
CONCRETE MASONRY UNIT	5 (125)
PRECAST REINFORCED CONCRETE SECTION	3 (75)

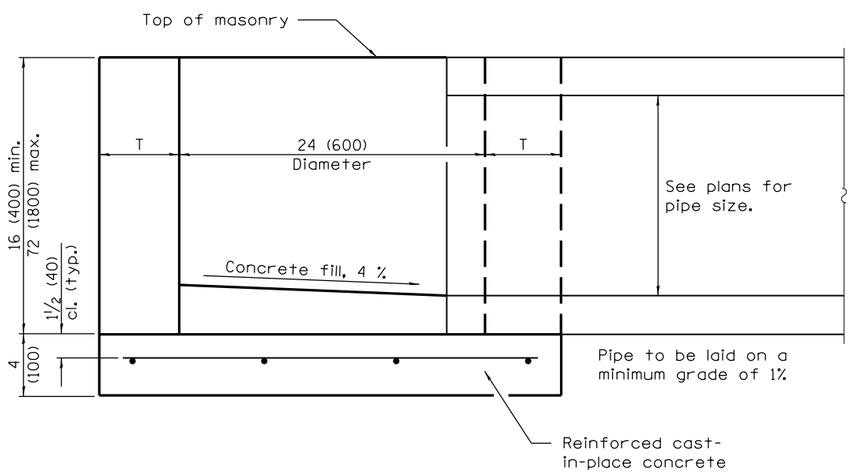

ELEVATION

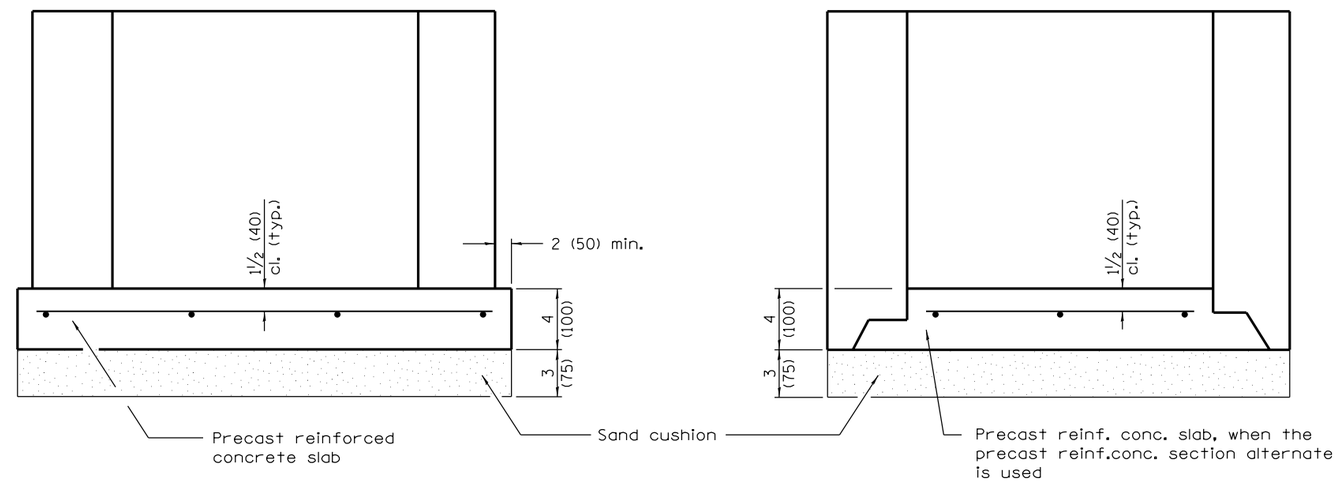

ALTERNATE METHODS

GENERAL NOTES

Bottom slabs shall be reinforced with a minimum of 0.24 sq. in./ft. (510 sq. mm/m) in both directions with a maximum spacing of 10 (250).

Bottom slabs may be connected to the riser as determined by the fabricator; however, only a single row of reinforcement around the perimeter may be utilized.

All dimensions are in inches (millimeters) unless otherwise shown.

Illinois Department of Transportation

PASSED January 1, 2014
Michael Brand
ENGINEER OF POLICY AND PROCEDURES
APPROVED January 1, 2014
ENGINEER OF DESIGN AND ENVIRONMENT

ISSUED 1-1-97

DATE	REVISIONS
1-1-14	Increased height to
	72 (1800) maximum.
1-1-11	Detailed rein. in slabs.
	Added max. limit to height.
	Added general notes.

INLET – TYPE A

STANDARD 602301–04

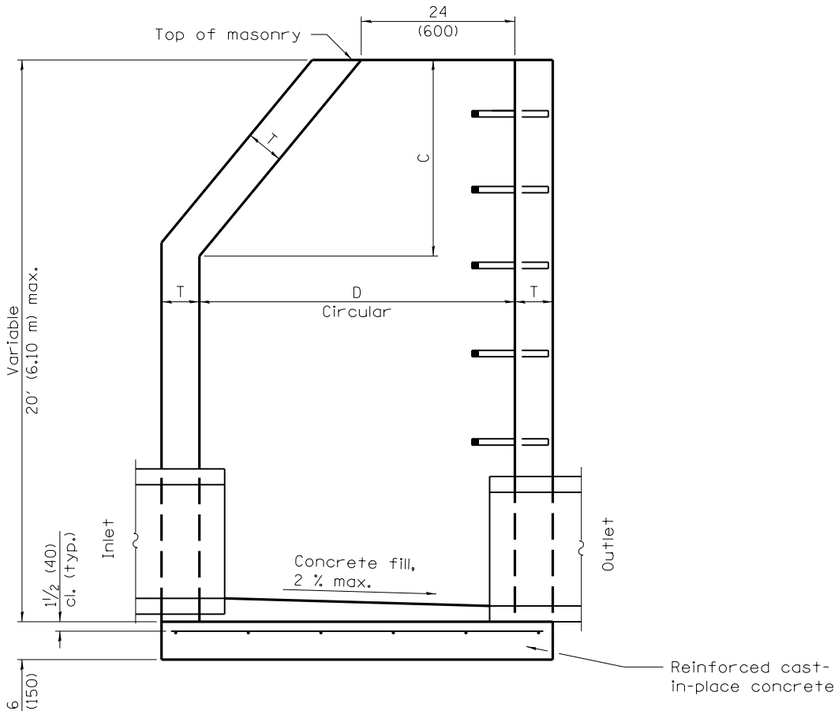

ELEVATION – ECCENTRIC

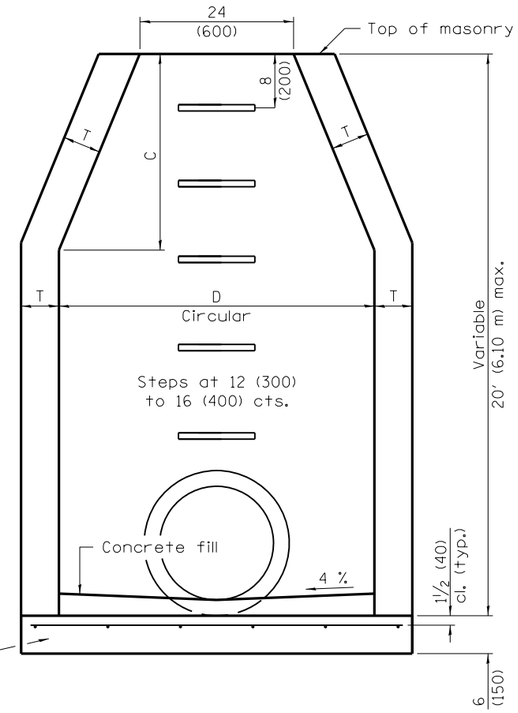

ELEVATION – CONCENTRIC

ALTERNATE MATERIALS FOR WALLS	D	C*	T (min.)
Concrete Masonry Unit	4'-0" (1.2 m) 5'-0" (1.5 m)	30 (750) 3'-9" (1.15 m)	5 (125) 5 (125)
Brick Masonry	4'-0" (1.2 m) 5'-0" (1.5 m)	30 (750) 3'-9" (1.15 m)	8 (200) 8 (200)
Precast Reinforced Concrete Section	4'-0" (1.2 m) 5'-0" (1.5 m)	30 (750) 3'-9" (1.15 m)	4 (100) 5 (125)
Cast-in-place Concrete	4'-0" (1.2 m) 5'-0" (1.5 m)	30 (750) 3'-9" (1.15 m)	6 (150) 6 (150)

* For precast reinforced concrete sections, dimension "C" may vary from the dimension given to plus 6 (150).

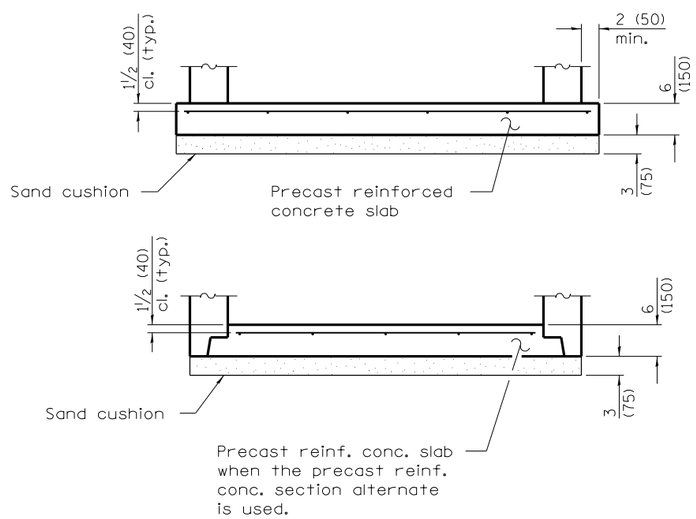

ALTERNATE BOTTOM SLAB

GENERAL NOTES

Bottom slabs shall be reinforced with a minimum of 0.31 sq. in./ft. (660 sq. mm/m) in both directions with a maximum spacing of 12 (300).

Bottom slabs may be connected to the riser as determined by the fabricator; however, only a single row of reinforcement around the perimeter may be utilized.

See Standard 602701 for details of steps.

See Standard 602601 for optional Precast Reinforced Concrete Flat Slab Top.

All dimensions are in inches (millimeters) unless otherwise shown.

Illinois Department of Transportation

PASSED January 1, 2011
Michael Brand
ENGINEER OF POLICY AND PROCEDURES
APPROVED January 1, 2011
ENGINEER OF DESIGN AND ENVIRONMENT

ISSUED 1-1-97

DATE	REVISIONS
1-1-11	Detailed rein. in slabs.
	Added max. limit to height.
	Revised general notes.
1-1-09	Switched units to
	English (metric).

MANHOLE TYPE A

STANDARD 602401–03

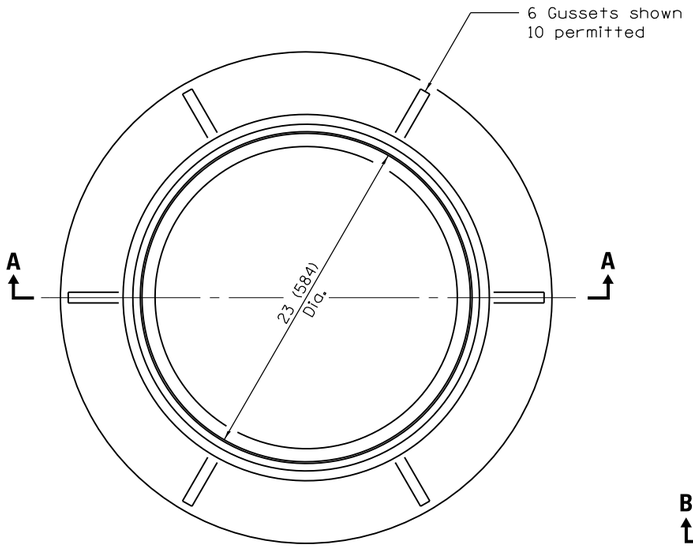

CAST FRAME

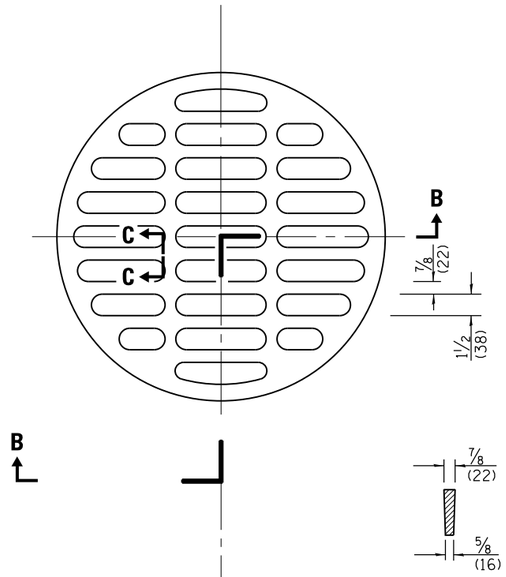

SECTION C–C

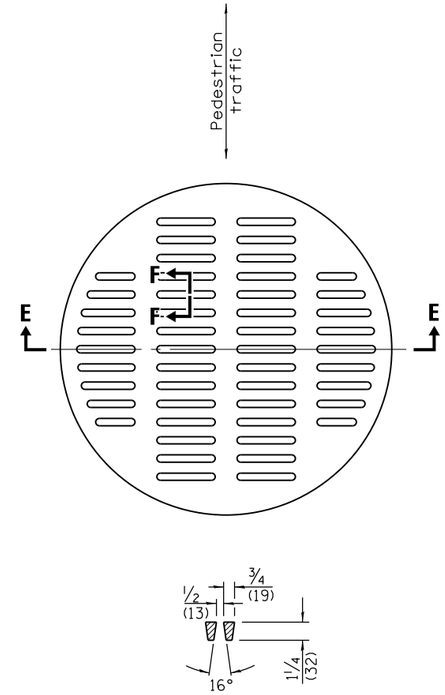

SECTION F–F

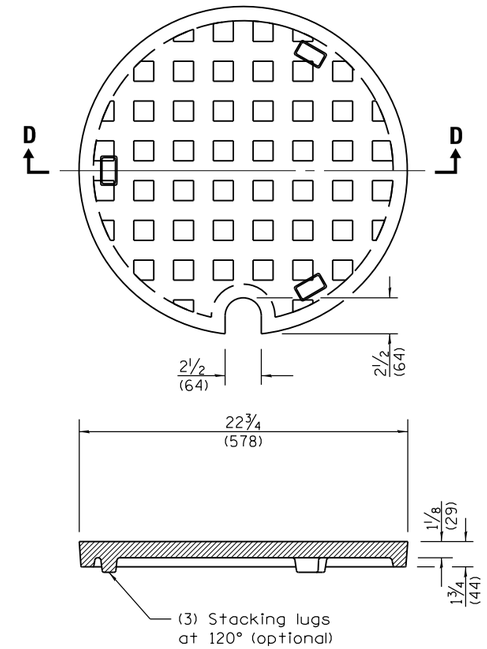

SECTION D–D

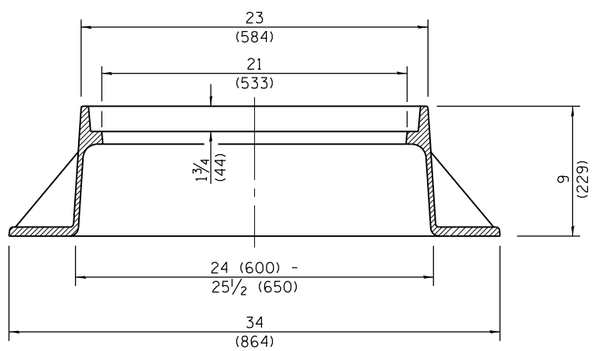

SECTION A–A
Gray Iron

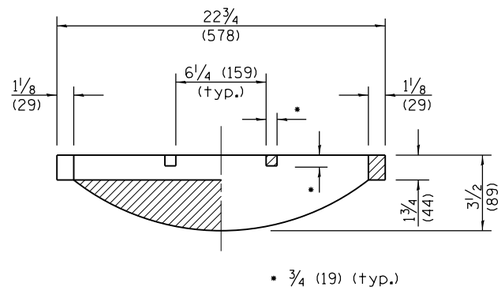

SECTION B–B

CAST OPEN LID

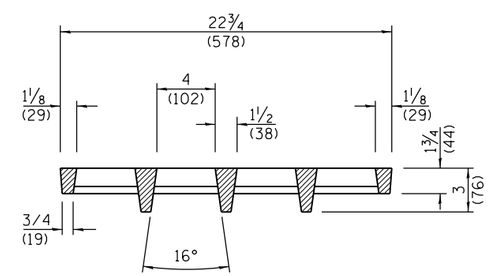

SECTION E–E

ADA COMPLIANT
CAST OPEN LID

CAST CLOSED LID
Gray Iron Lid

All dimensions are in inches (millimeters) unless otherwise shown.

Illinois Department of Transportation

PASSED January 1, 2015
Michael Brand
ENGINEER OF POLICY AND PROCEDURES
APPROVED January 1, 2015
ENGINEER OF DESIGN AND ENVIRONMENT

ISSUED 1-1-97

DATE	REVISIONS
1-1-15	Revised dimensioning of
	frame. Added ADA compliant
	open lid.
1-1-09	Switched units to
	English (metric).

FRAME AND LIDS TYPE 1

STANDARD 604001–04

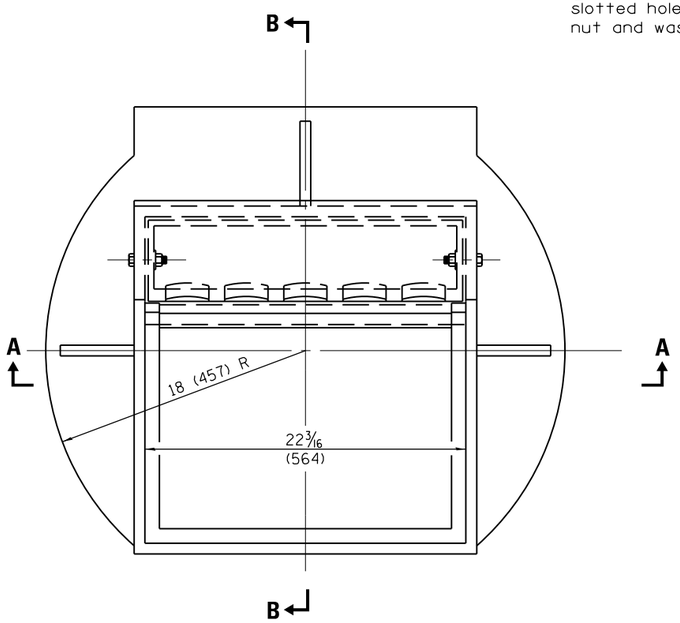

CAST FRAME

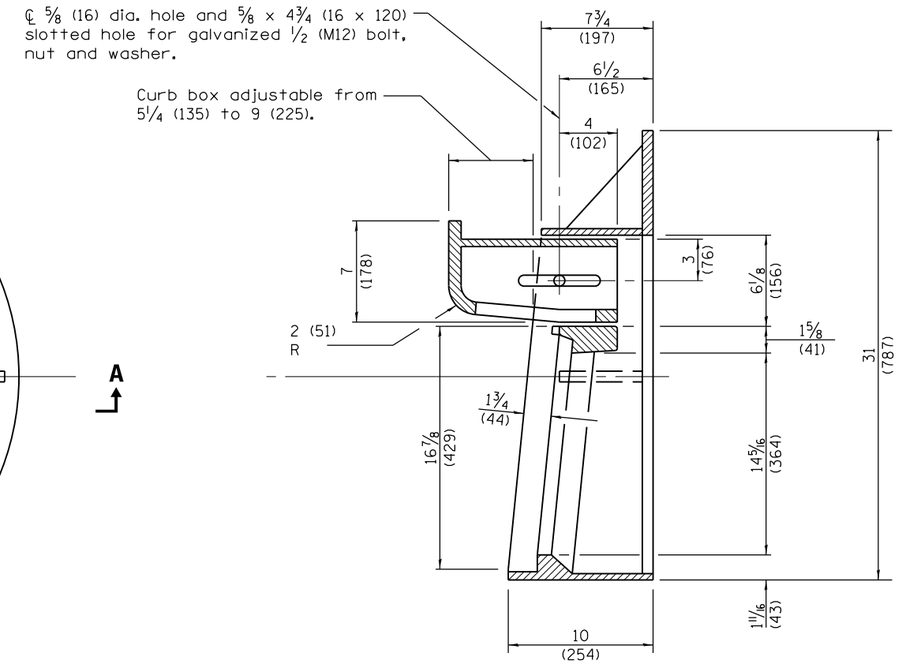

SECTION B–B

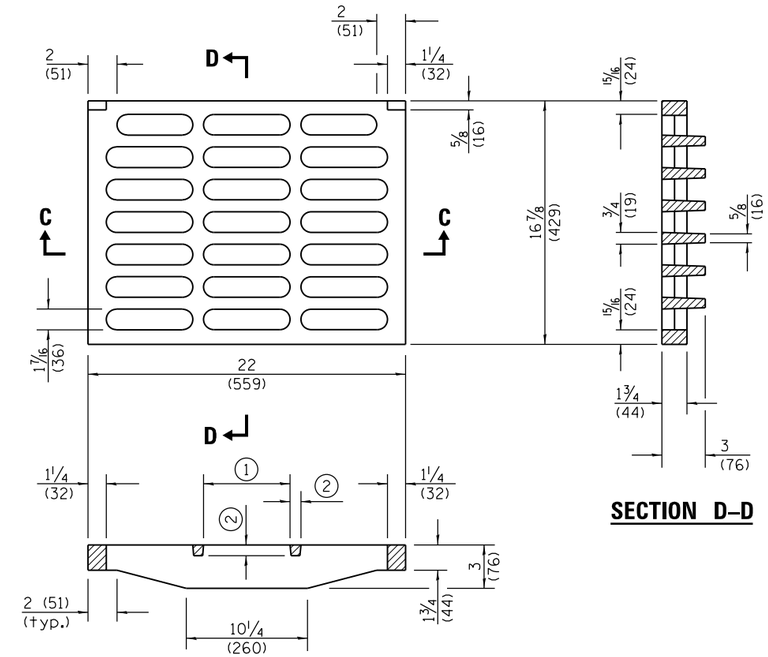

SECTION D–D

SECTION C–C

1 = 6 (152) typ.

2 = 3/4 (19) typ.

CAST GRATE

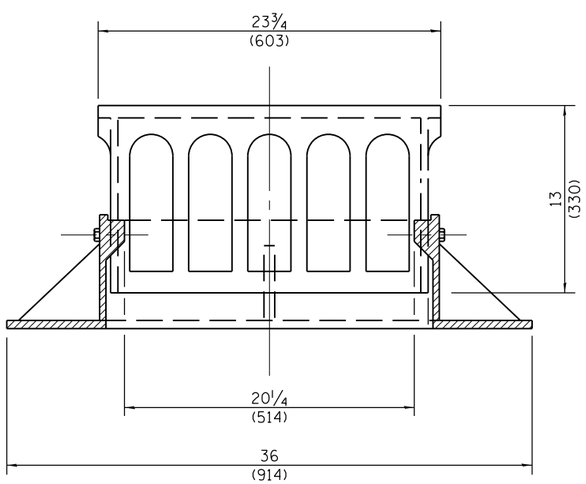

SECTION A–A

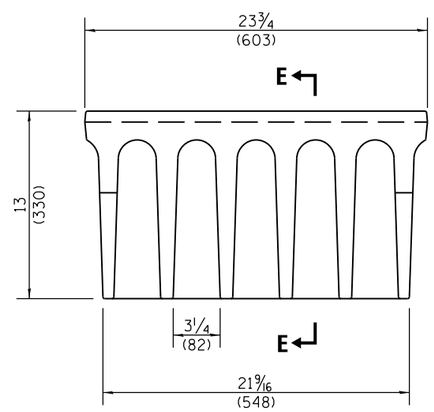

ALTERNATE CURB BOX

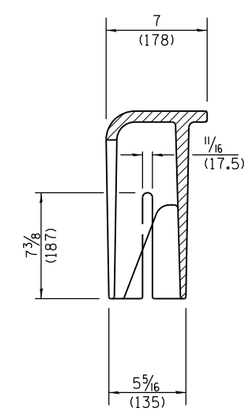

SECTION E–E

All dimensions are in inches (millimeters) unless otherwise shown.

Illinois Department of Transportation

PASSED January 1. 2015

Michael Brand

ENGINEER OF POLICY AND PROCEDURES

APPROVED January 1. 2015

ENGINEER OF DESIGN AND ENVIRONMENT

ISSUED 1-1-97

DATE	REVISIONS
1-1-15	Revised dimenstions of
	frame and alternate curb
	box.
1-1-09	Switched units to
	English (metric).

FRAME AND GRATE TYPE 3

STANDARD 604006–05

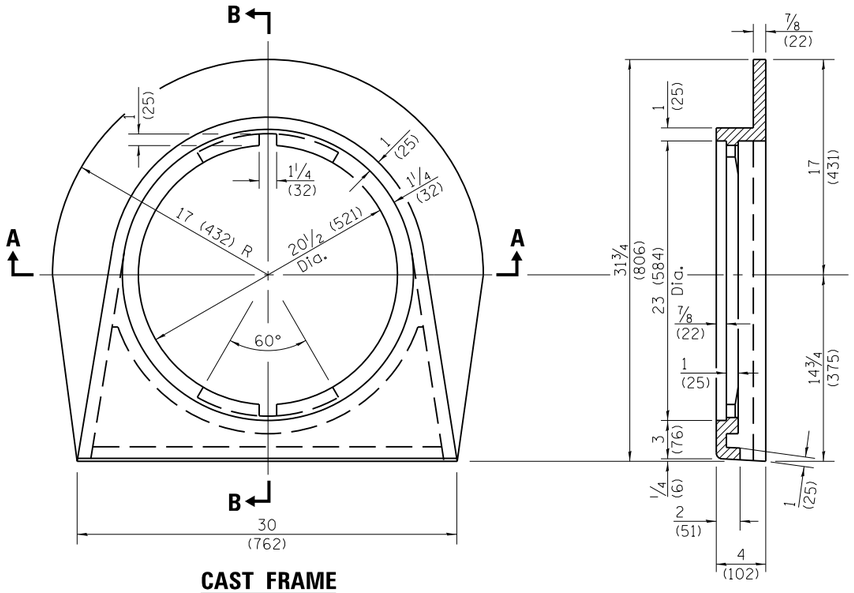

CAST FRAME
(GRAY IRON)

SECTION B–B

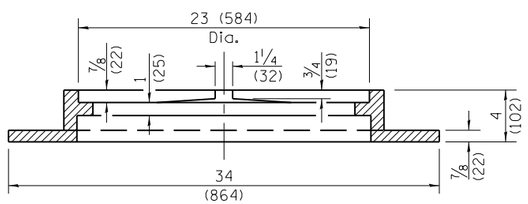

SECTION A–A

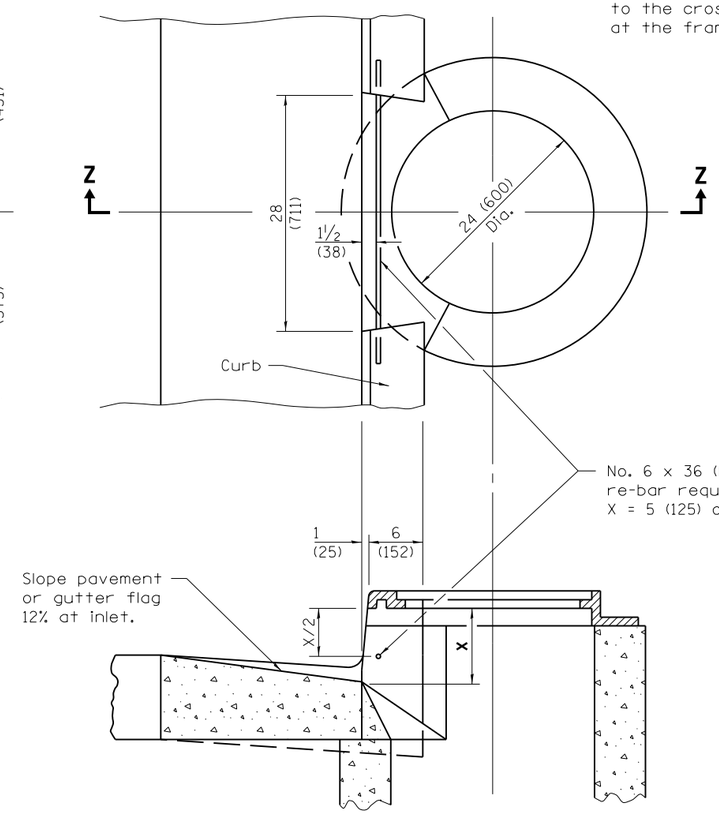

SECTION Z–Z
(WITH FRAME)

CASE II

NOTE:
Warp sloping face of curbs in a distance of 5' (1.5 m) to the cross section shown at the frame.

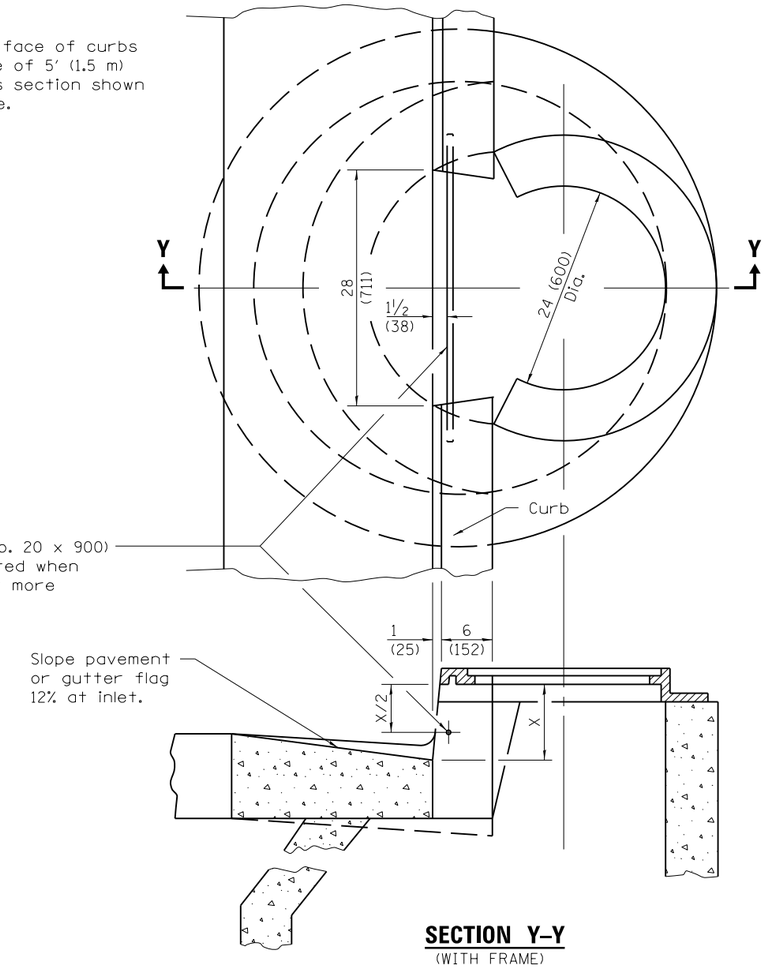

SECTION Y–Y
(WITH FRAME)

CASE I

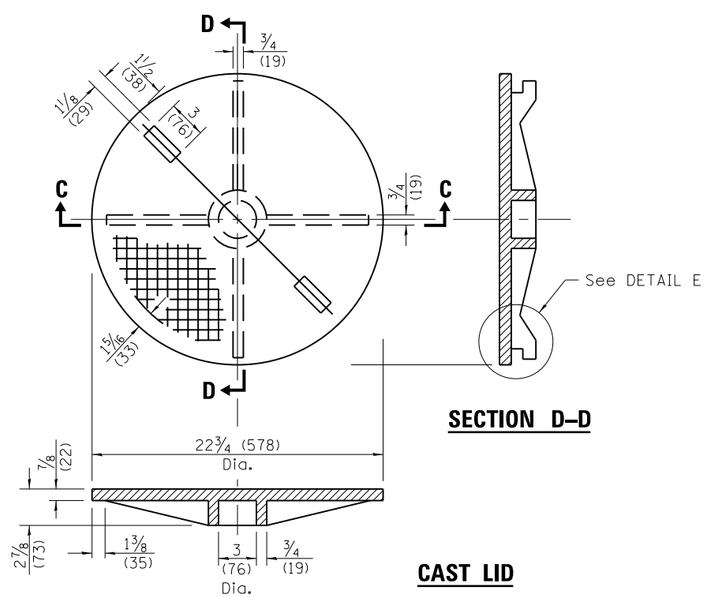

SECTION D–D

CAST LID

SECTION C–C

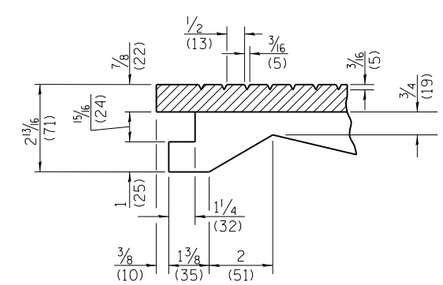

DETAIL E

All dimensions are in inches (millimeters) unless otherwise shown.

Illinois Department of Transportation

PASSED January 1, 2009
ENGINEER OF POLICY AND PROCEDURES
APPROVED January 1, 2009
ENGINEER OF DESIGN AND ENVIRONMENT

ISSUED 1-1-97

DATE	REVISIONS
1-1-09	Switched units to
	English (metric).
1-1-04	Removed weights.

FRAME AND LID TYPE 15

STANDARD 604066–02

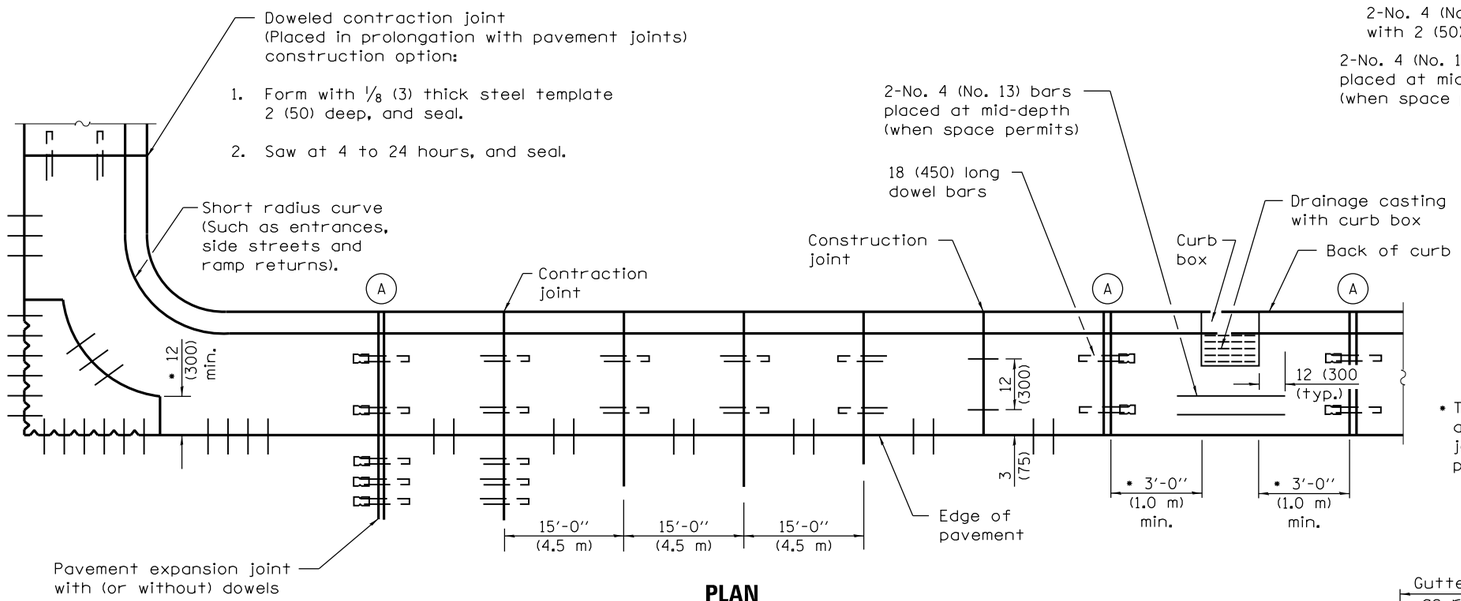

• This dimension shall be adjusted to align with joint on the adjacent pavement

PLAN
ADJACENT TO PCC PAVEMENT OR PCC BASE COURSE

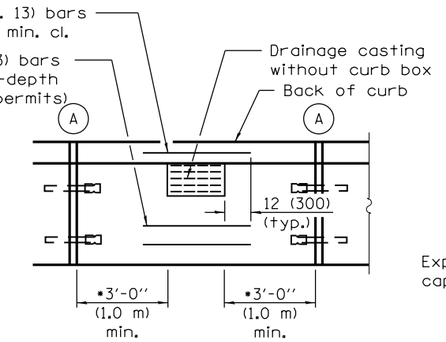

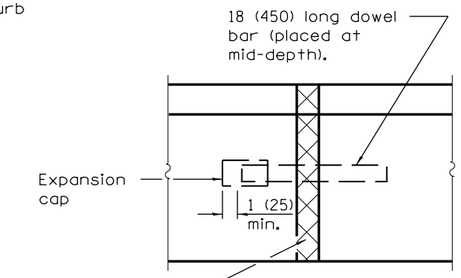

DETAIL (A)
EXPANSION JOINT

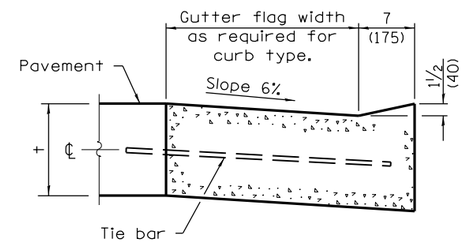

DEPRESSED CURB (TYPICAL)

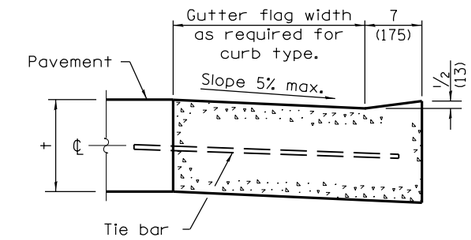

DEPRESSED CURB ADJACENT TO CURB RAMP ACCESSIBLE TO THE DISABLED

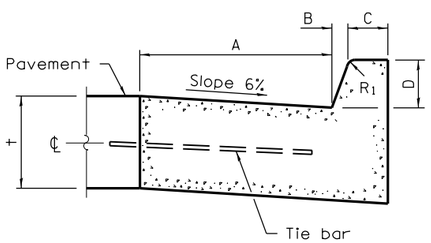

BARRIER CURB

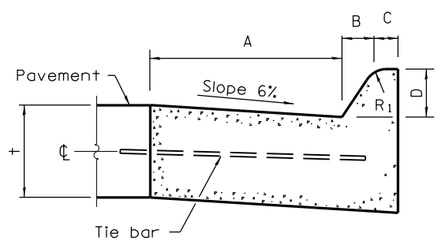

MOUNTABLE CURB

TABLE OF DIMENSIONS BARRIER CURB					
TYPE	A	B	C	D	R_1
B-6.06 * (B-15.15)	6 (150)	1 (25)	6 (150)	6 (150)	1 (25)
B-6.12 (B-15.3)	12 (300)	1 (25)	6 (150)	6 (150)	1 (25)
B-6.18 (B-15.45)	18 (450)	1 (25)	6 (150)	6 (150)	1 (25)
B-6.24 (B-15.60)	24 (600)	1 (25)	6 (150)	6 (150)	1 (25)
B-9.12 (B-22.30)	12 (300)	2 (50)	5 (125)	9 (225)	1 (25)
B-9.18 (B-22.45)	18 (450)	2 (50)	5 (125)	9 (225)	1 (25)
B-9.24 (B-22.60)	24 (600)	2 (50)	5 (125)	9 (225)	1 (25)

* For corner islands only.

TABLE OF DIMENSIONS MOUNTABLE CURB						
TYPE	A	B	C	D	R_1	R_2
M-2.06 (M-5.15)	6 (150)	2 (50)	4 (100)	2 (50)	3 (75)	2 (50)
M-2.12 (M-5.30)	12 (300)	2 (50)	4 (100)	2 (50)	3 (75)	2 (50)
M-4.06 (M-10.15)	6 (150)	4 (100)	3 (75)	4 (100)	3 (75)	NA
M-4.12 (M-10.30)	12 (300)	4 (100)	3 (75)	4 (100)	3 (75)	NA
M-4.18 (M-10.45)	18 (450)	4 (100)	3 (75)	4 (100)	3 (75)	NA
M-4.24 (M-10.60)	24 (600)	4 (100)	3 (75)	4 (100)	3 (75)	NA
M-6.06 (M-15.15)	6 (150)	6 (150)	2 (50)	6 (150)	2 (50)	NA
M-6.12 (M-15.30)	12 (300)	6 (150)	2 (50)	6 (150)	2 (50)	NA
M-6.18 (M-15.45)	18 (450)	6 (150)	2 (50)	6 (150)	2 (50)	NA
M-6.24 (M-15.60)	24 (600)	6 (150)	2 (50)	6 (150)	2 (50)	NA

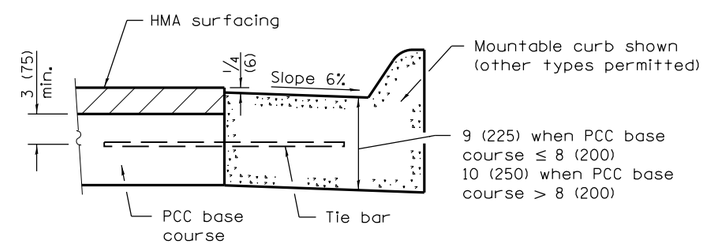

ADJACENT TO PCC BASE COURSE WITH HMA SURFACING

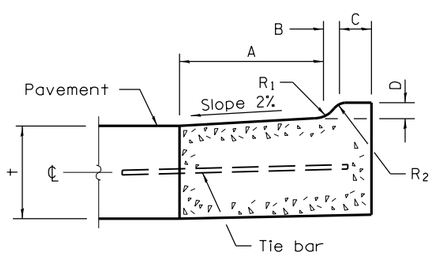

M–2.06 (M–5.15) and M–2.12 (M–5.30)

GENERAL NOTES

The bottom slope of combination curb and gutter constructed adjacent to pcc pavement shall be the same slope as the subbase or 6% when subbase is omitted.

t = Thickness of pavement.

Longitudinal joint tie bars shall be No. 6 (No. 19) at 24 (600) centers in accordance with details for longitudinal construction joint shown on Standard 420001.

A minimum clearance of 2 (50) between the end of the tie bar and the back of the curb shall be maintained.

The dowel bars shown in contraction joints will only be required for monolithic construction.

See Standard 606301 for details of corner islands.

All dimensions are in inches (millimeters) unless otherwise shown.

Illinois Department of Transportation

PASSED January 1, 2015
Michael Brand
ENGINEER OF POLICY AND PROCEDURES
APPROVED January 1, 2015
ENGINEER OF DESIGN AND ENVIRONMENT

ISSUED 1-1-97

DATE	REVISIONS
1-1-15	Added B-6.06 (B-15.15) barrier
	curb and gutter to table
	(corner islands only).
1-1-13	Added general note
	regarding requirement
	for dowel bars.

CONCRETE CURB TYPE B AND COMBINATION CONCRETE CURB AND GUTTER

(Sheet 1 of 2)

STANDARD 606001–06

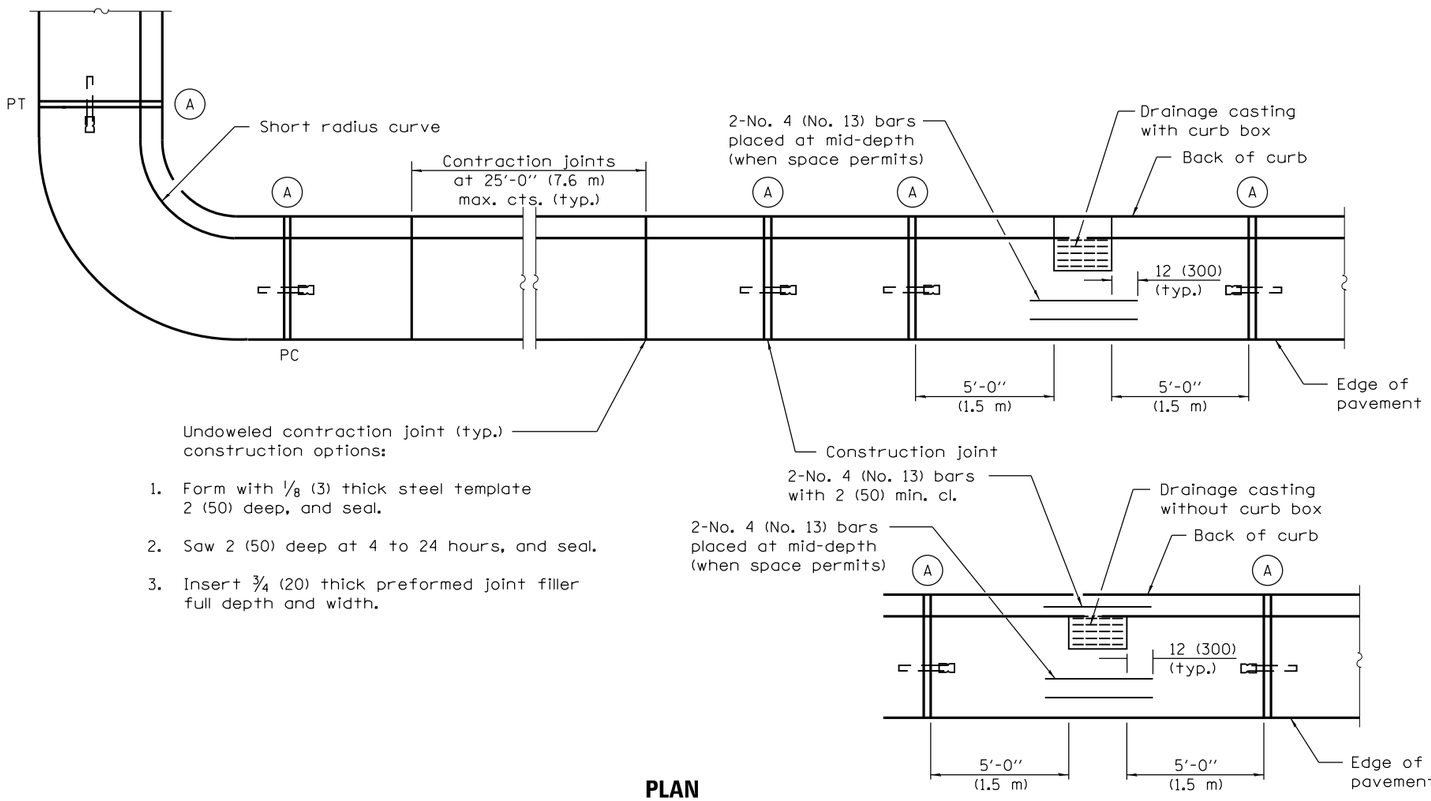

PLAN

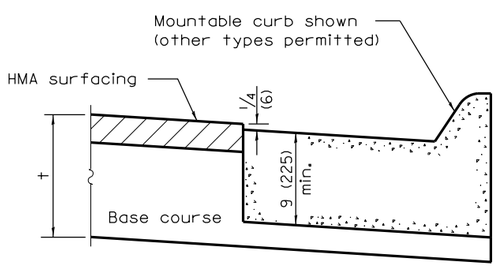

ON DISTURBED SUBGRADE

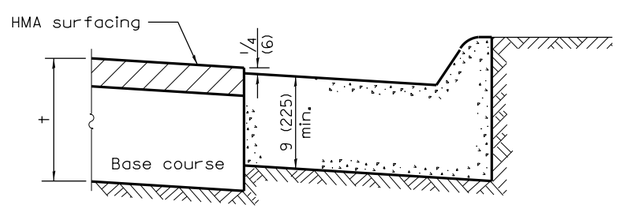

ON UNDISTURBED SUBGRADE

ADJACENT TO FLEXIBLE PAVEMENT

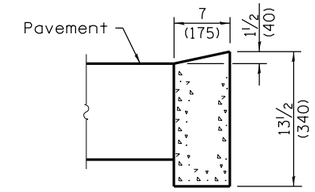

DEPRESSED CURB

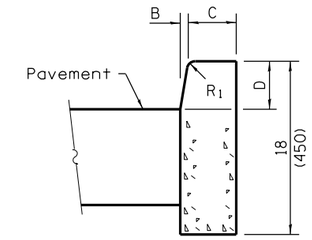

BARRIER CURB

ADJACENT TO FLEXIBLE PAVEMENT

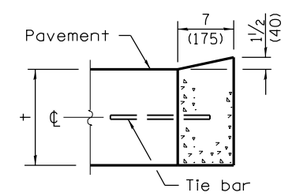

DEPRESSED CURB

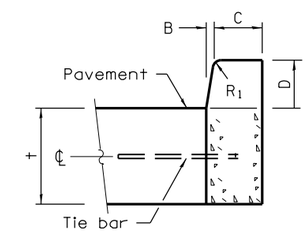

BARRIER CURB

ADJACENT TO PCC PAVEMENT OR PCC BASE COURSE

CONCRETE CURB TYPE B

Illinois Department of Transportation

PASSED January 1, 2015

Michael Brand
ENGINEER OF POLICY AND PROCEDURES

APPROVED January 1, 2015

ENGINEER OF DESIGN AND ENVIRONMENT

ISSUED 1-1-97

CONCRETE CURB TYPE B AND COMBINATION CONCRETE CURB AND GUTTER

(Sheet 2 of 2)

STANDARD 606001–06

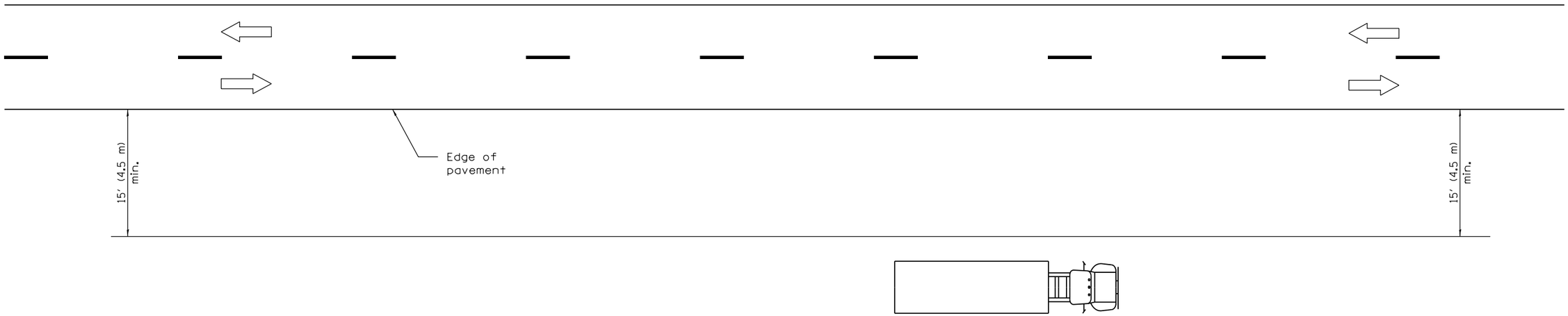

TYPICAL APPLICATIONS

Landscaping work

Utility work

Fencing contracts and maintenance

Cleaning culverts

GENERAL NOTES

This Standard is used where at all times all vehicles, equipment, workers or their activities are more than 15′ (4.5 m) from the edge of pavement.

When the work operation requires that two or more work vehicles cross the 15′ (4.5 m) clear zone in any one hour, traffic control shall be according to Standard 701006.

All dimensions are in inches (millimeters) unless otherwise shown.

Illinois Department of Transportation

APPROVED January 1, 2009
ENGINEER OF OPERATIONS

APPROVED January 1, 2009
ENGINEER OF DESIGN AND ENVIRONMENT

ISSUED 1-1-97

DATE	REVISIONS
1-1-09	Switched units to
	English (metric).
1-1-05	Revised title and notes.

OFF–RD OPERATIONS, 2L, 2W, MORE THAN 15′ (4.5 m) AWAY

STANDARD 701001–02

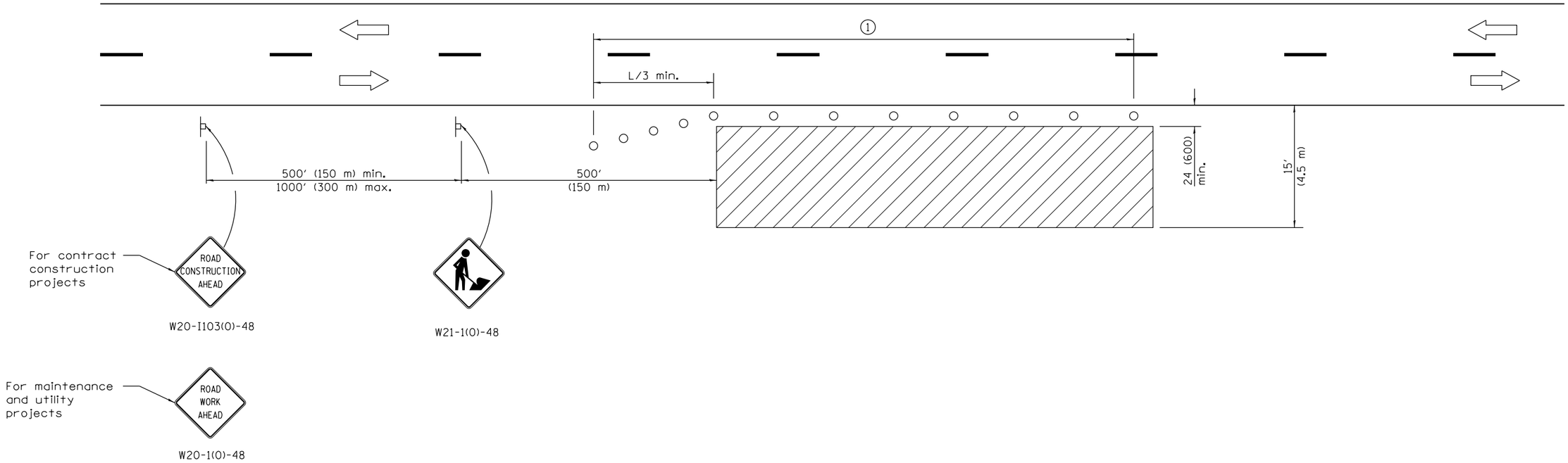

TYPICAL APPLICATIONS

Utility operations
Culvert extensions
Side slope changes
Guardrail installation and maintenance
Delineator installation
Landscaping operations
Shoulder repair
Sign installation and maintenance

SYMBOLS

Work area

Sign

Cone, drum or barricade

① When the work operation exceeds one hour, cones, drums or barricades shall be placed at 25′ (8 m) centers for L/3 distance, and at 50′ (15 m) centers through the remainder of the work area.

GENERAL NOTES

This Standard is used where any vehicles, equipment, workers or their activities will encroach in the area 15′ (4.5 m) to 24 (600) from the edge of pavement.

Calculate L as follows:

SPEED LIMIT	FORMULAS English	FORMULAS (Metric)
40 mph (70 km/h) or less:	$L = \frac{WS^2}{60}$	$L = \frac{WS^2}{150}$
45 mph (80 km/h) or greater:	L=(W)(S)	L=0.65(W)(S)

W = Width of offset in feet (meters).

S = Normal posted speed mph (km/h).

All dimensions are in inches (millimeters) unless otherwise shown.

Illinois Department of Transportation

APPROVED January 1, 2014
ENGINEER OF SAFETY ENGINEERING

APPROVED January 1, 2014
ENGINEER OF DESIGN AND ENVIRONMENT

ISSUED 1-1-97

DATE	REVISIONS
1-1-14	Revised workers sign
	number to agree with
	current MUTCD.
1-1-13	Omitted text 'WORKERS'
	sign.

OFF–RD OPERATIONS, 2L, 2W, 15′ (4.5 m) TO 24″ (600 mm) FROM PAVEMENT EDGE

STANDARD 701006–05

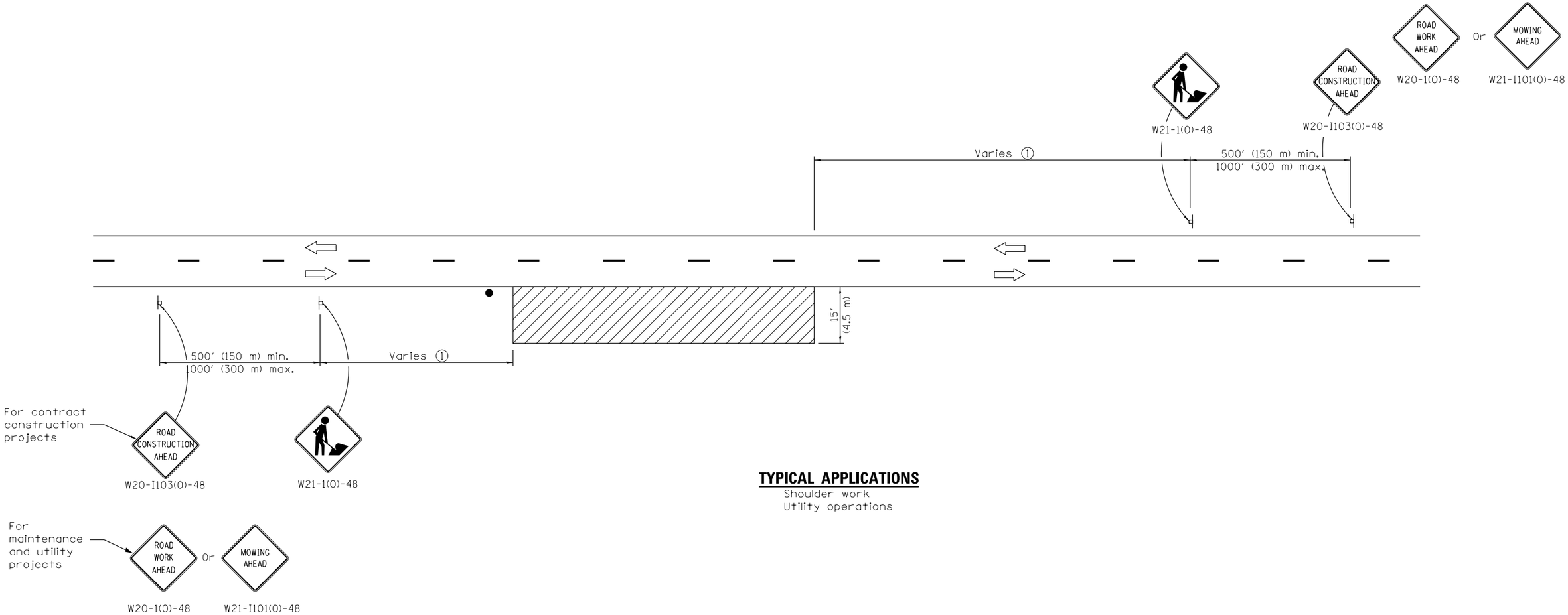

TYPICAL APPLICATIONS

Shoulder work
Utility operations

① Minimum distance is 200′ (60 m). Maximum distance to be determined by the Engineer but should not exceed ½ the length required for one normal working day's operation, or 4 miles (6.4 km) whichever is less.

GENERAL NOTES

This Standard is used where at any time, any vehicle, equipment. workers or their activities require an intermittent or continuous moving operation on the shoulder, where the average speed is 1 mph (2 km/h) or less.

When the work operation does not exceed 60 minutes, traffic control may be according to Standard 701301.

All dimensions are in inches (millimeters) unless otherwise shown.

SYMBOLS

Work area

Sign

Flagger with traffic control sign when required

Illinois Department of Transportation

APPROVED January 1, 2014
ENGINEER OF SAFETY ENGINEERING

APPROVED January 1, 2014
ENGINEER OF DESIGN AND ENVIRONMENT

ISSUED 1-1-97

DATE	REVISIONS
1-1-14	Revised workers sign
	number to agree with
	current MUTCD.
1-1-13	Omitted text 'WORKERS'
	sign.

OFF–RD MOVING OPERATIONS, 2L, 2W, DAY ONLY

STANDARD 701011–04

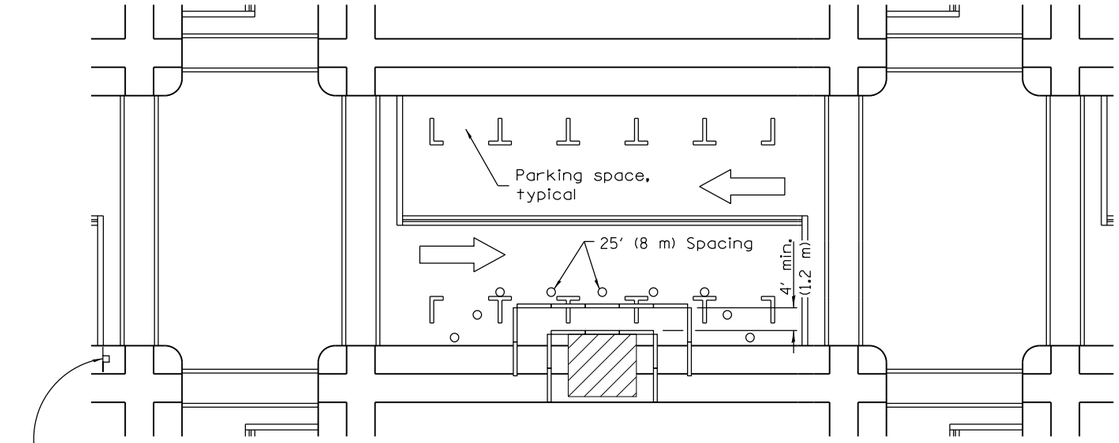

① Omit whenever duplicated by road work traffic control.

① W20-I103(0)-48 for contract construction projects

Or

① W20-1(0)-48 for maintenance and utility projects

SIDEWALK DIVERSION

SYMBOLS

- Work area
- Sign on portable or permanent support
- Barricade or drum
- Cone, drum or barricade
- Type III barricade
- Detectable pedestrian channelizing barricade

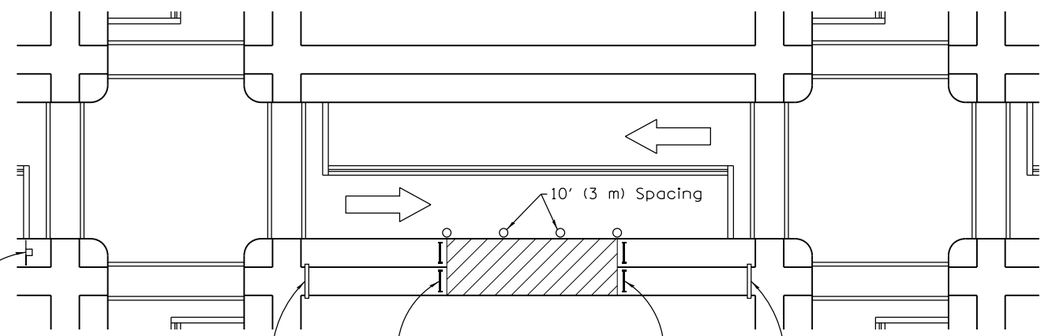

① W20-I103(0)-48 for contract construction projects

Or

① W20-1(0)-48 for maintenance and utility projects

R11-I102-2430

R11-I101-2418

R11-I102-2430

SIDEWALK CLOSURE

GENERAL NOTES

This Standard is used where, at any time, pedestrian traffic must be rerouted due to work being performed.

This Standard must be used in conjunction with other Traffic Control & Protection Standards when roadway traffic is affected.

Temporary facilities shall be detectable and accessible.

The temporary pedestrian facilities shall be provided on the same side of the closed facilities whenever possible.

The SIDEWALK CLOSED / USE OTHER SIDE sign shall be placed at the nearest crosswalk or intersection to each end of the closure. Where the closure occurs at a corner, the signs shall be erected on the corners across the street from the closure. The SIDEWALK CLOSED signs shall be used at the ends of the actual closures.

Type III barricades and R11-2-4830 signs shall be positioned as shown in "ROAD CLOSED TO ALL TRAFFIC" detail on Standard 701901.

All dimensions are in inches (millimeters) unless otherwise shown.

Illinois Department of Transportation

APPROVED April 1, 2016
ENGINEER OF SAFETY ENGINEERING

APPROVED April 1, 2016
ENGINEER OF DESIGN AND EVIRONMENT

ISSUED 1-1-97

DATE	REVISIONS
4-1-16	Omitted orange safety fence
	from standard as this is
	covered in the std. spec.
1-1-12	Added SIDEWALK DIVERSION.
	Modified appearance of
	plan views. Renamed Std.

SIDEWALK, CORNER OR CROSSWALK CLOSURE

(Sheet 1 of 2)

STANDARD 701801–06

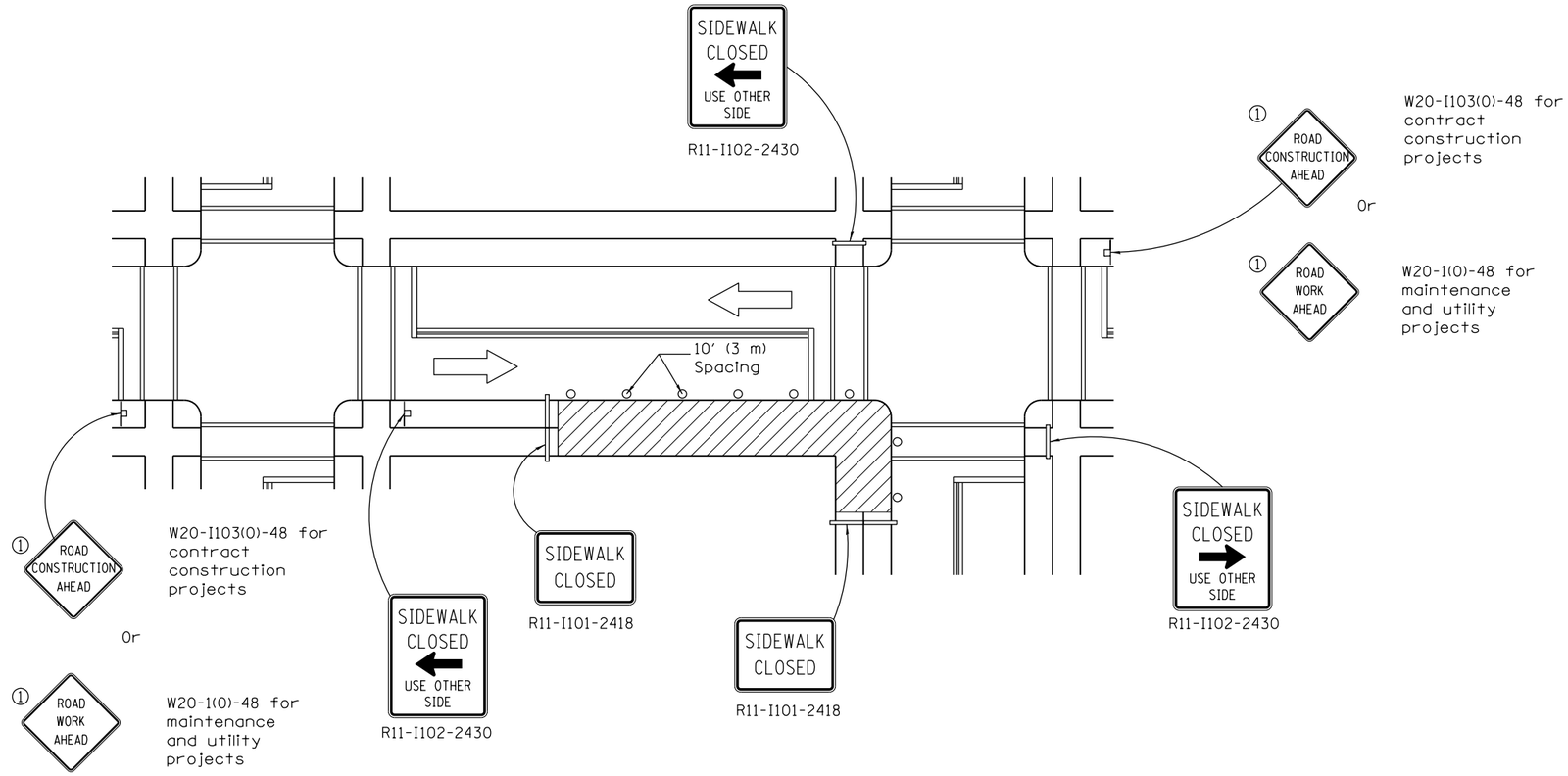

CORNER CLOSURE

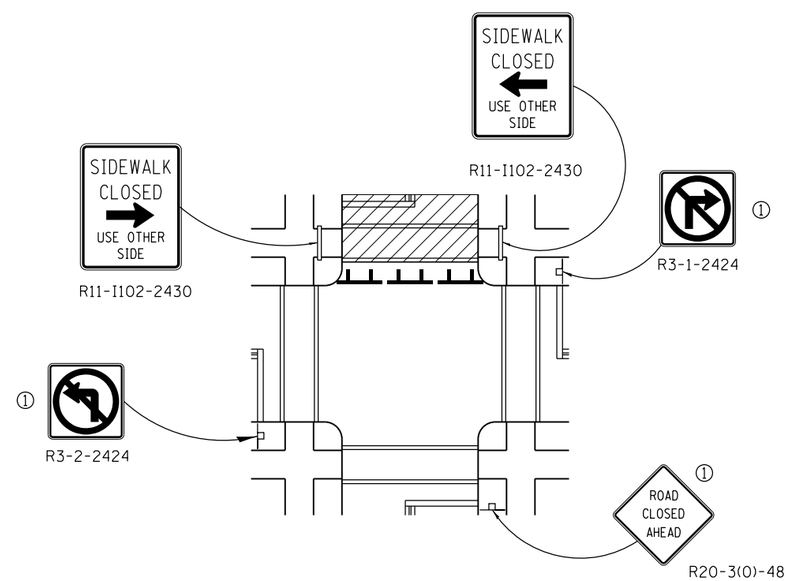

CROSSWALK CLOSURE

Illinois Department of Transportation

APPROVED April 1, 2016
ENGINEER OF SAFETY ENGINEERING
APPROVED April 1, 2016
ENGINEER OF DESIGN AND EVIRONMENT

ISSUED 1-1-97

SIDEWALK, CORNER OR CROSSWALK CLOSURE

(Sheet 2 of 2)

STANDARD 701801–06

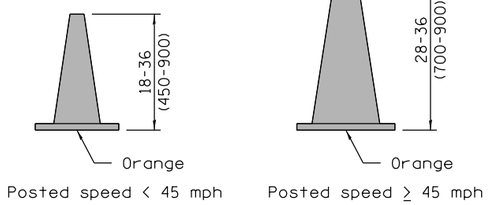

CONE FOR DAYTIME

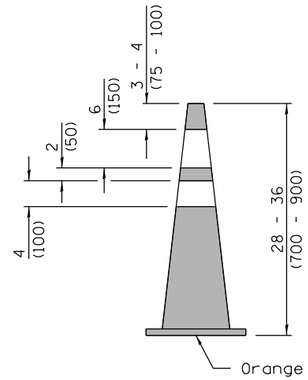

REFLECTORIZED CONE FOR NIGHTTIME

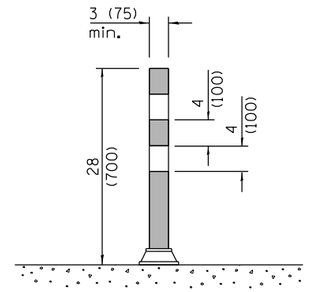

FLEXIBLE DELINEATOR

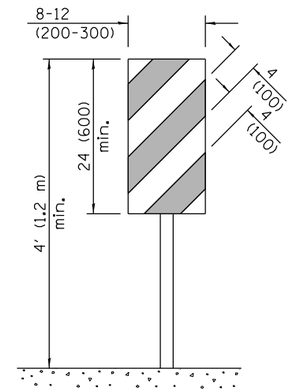

VERTICAL PANEL
POST MOUNTED

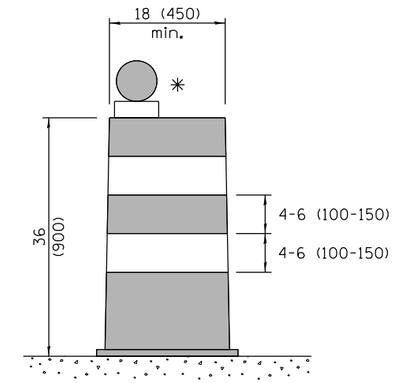

DRUM

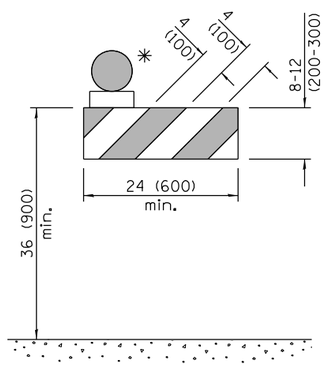

TYPE I BARRICADE

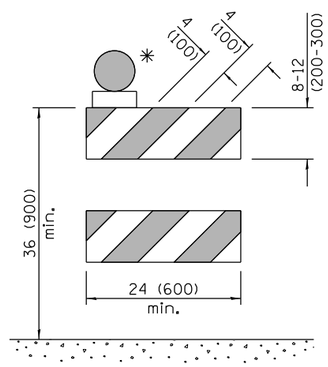

TYPE II BARRICADE

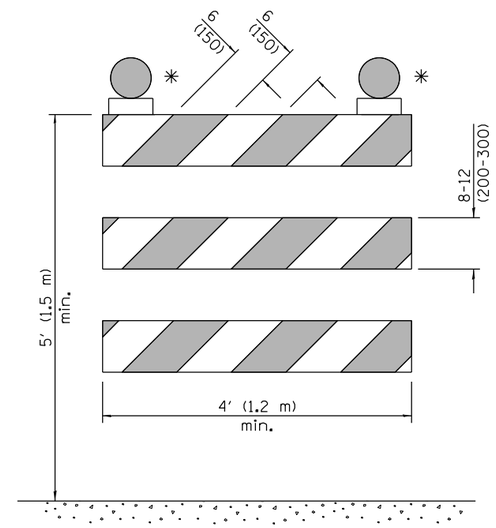

TYPE III BARRICADE

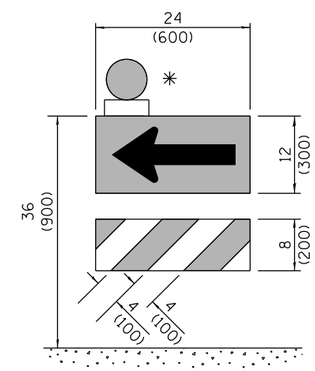

DIRECTION INDICATOR BARRICADE

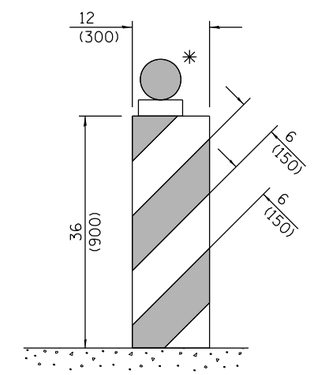

VERTICAL BARRICADE

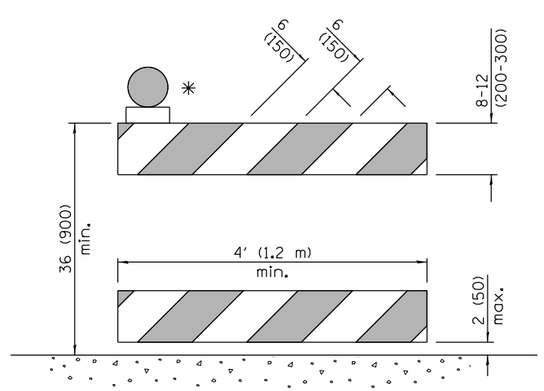

DETECTABLE PEDESTRIAN CHANNELIZING BARRICADE

✳ Warning lights (if required)

GENERAL NOTES

All heights shown shall be measured above the pavement surface.

All dimensions are in inches (millimeters) unless otherwise shown.

Illinois Department of Transportation

APPROVED April 1, 2016
ENGINEER OF OPERATIONS
APPROVED April 1, 2016
ENGINEER OF DESIGN AND ENVIRONMENT

ISSUED 1-1-97

DATE	REVISIONS
4-1-16	Add dim's to barricades. Rev.
	note for post mnt. signs.
	Rev. cone dtls. Add W12-I103.
1-1-15	Revised two sign numbers on
	sheet 2. Added note reg.
	PHOTO ENFORCED plaque.

TRAFFIC CONTROL DEVICES

(Sheet 1 of 3)

STANDARD 701901-05

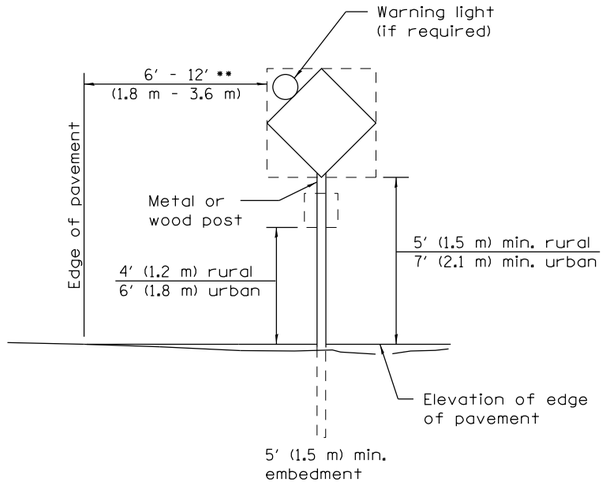

POST MOUNTED SIGNS

•• When curb or paved shoulder are present this dimension shall be 24 (600) to the face of curb or 6′ (1.8 m) to the outside edge of the paved shoulder.

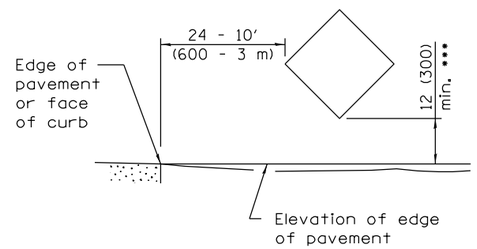

SIGNS ON TEMPORARY SUPPORTS

••• When work operations exceed four days, this dimension shall be 5′ (1.5 m) min. If located behind other devices, the height shall be sufficient to be seen completely above the devices.

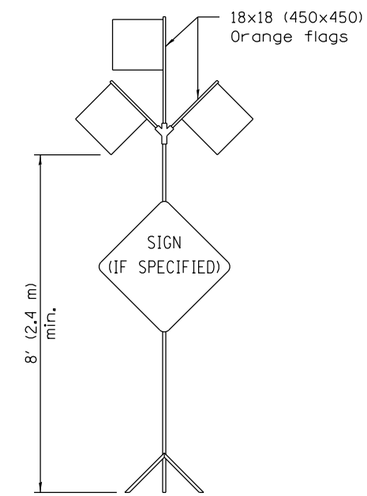

HIGH LEVEL WARNING DEVICE

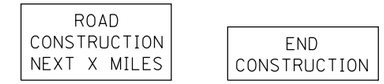

G20-I104(0)-6036 G20-I105(0)-6024

This signing is required for all projects 2 miles (3200 m) or more in length.

ROAD CONSTRUCTION NEXT X MILES sign shall be placed 500′ (150 m) in advance of project limits.

END CONSTRUCTION sign shall be erected at the end of the job unless another job is within 2 miles (3200 m).

Dual sign displays shall be utilized on multi-lane highways.

WORK LIMIT SIGNING

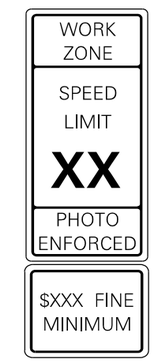

W21-I115(0)-3618

R2-1-3648

R10-I108p-3618 ••••

R2-I106p-3618

Sign assembly as shown on Standards or as allowed by District Operations.

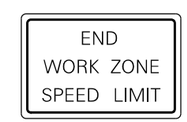

G20-I103(0)-6036

This sign shall be used when the above sign assembly is used.

HIGHWAY CONSTRUCTION SPEED ZONE SIGNS

•••• R10-I108p shall only be used along roadways under the juristiction of the State.

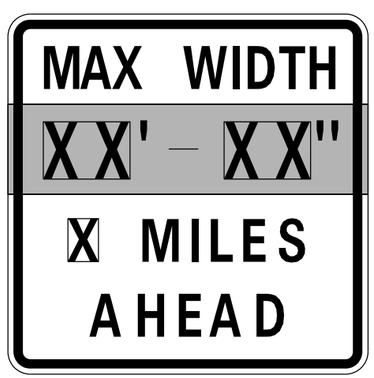

W12-I103-4848

WIDTH RESTRICTION SIGN

XX′-XX″ width and X miles are variable.

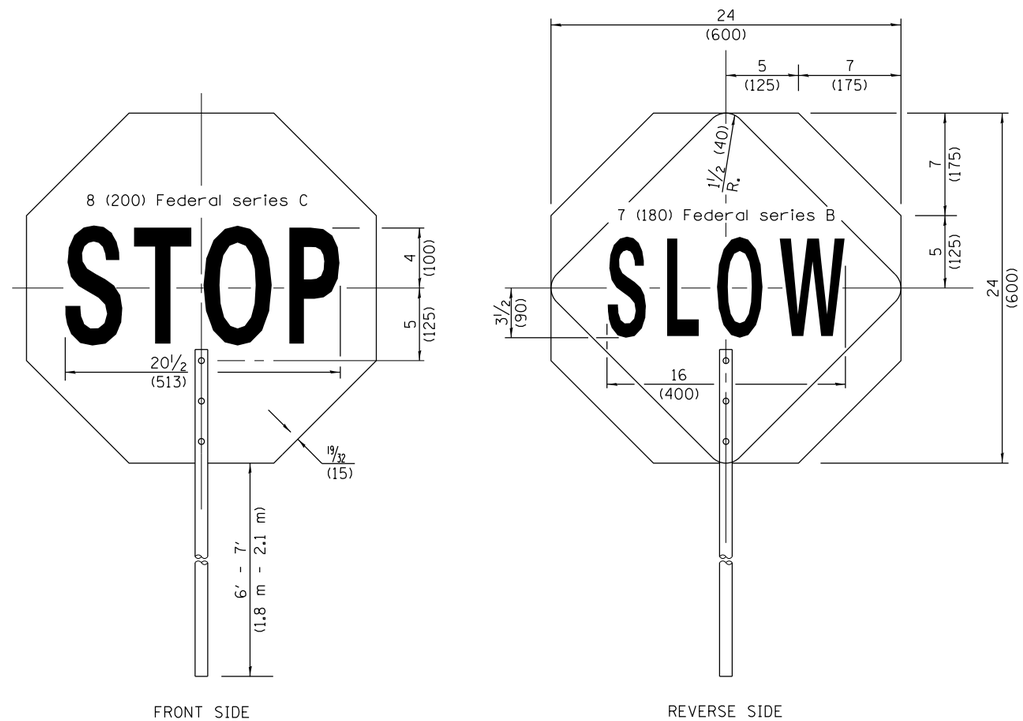

FLAGGER TRAFFIC CONTROL SIGN

Illinois Department of Transportation

APPROVED April 1, 2016
ENGINEER OF OPERATIONS

APPROVED April 1, 2016
ENGINEER OF DESIGN AND ENVIRONMENT

ISSUED 1-1-97

TRAFFIC CONTROL DEVICES

(Sheet 2 of 3)

STANDARD 701901–05

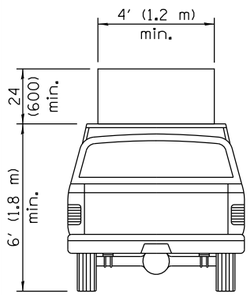

TYPE A
ROOF
MOUNTED

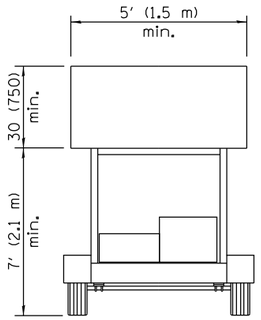

TYPE B
ROOF OR TRAILER
MOUNTED

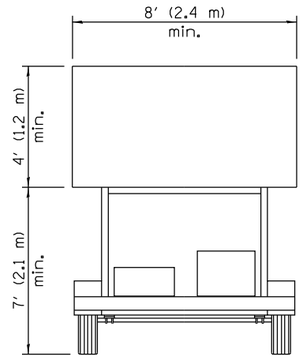

TYPE C
TRAILER
MOUNTED

ARROW BOARDS

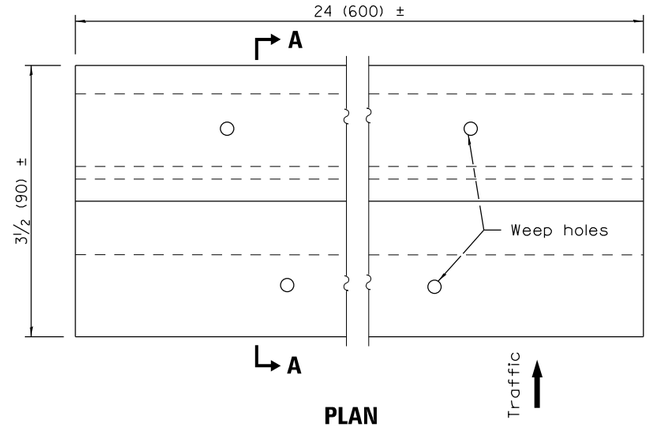

PLAN

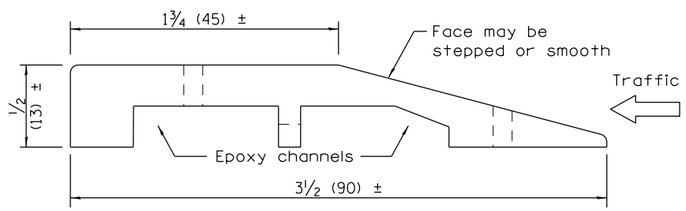

SECTION A–A

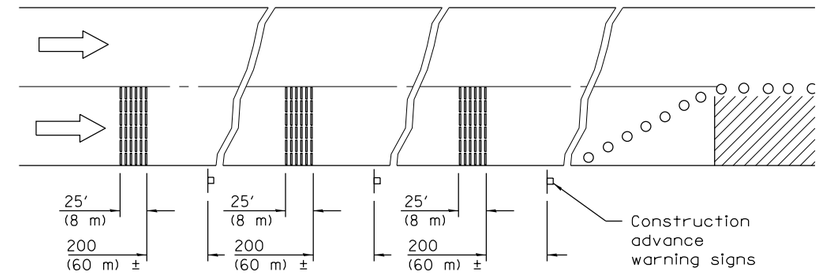

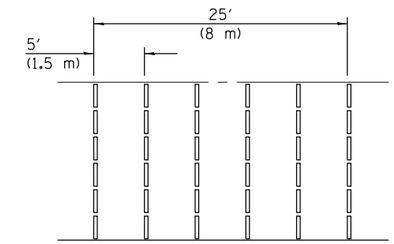

TYPICAL INSTALLATION

TEMPORARY RUMBLE STRIPS

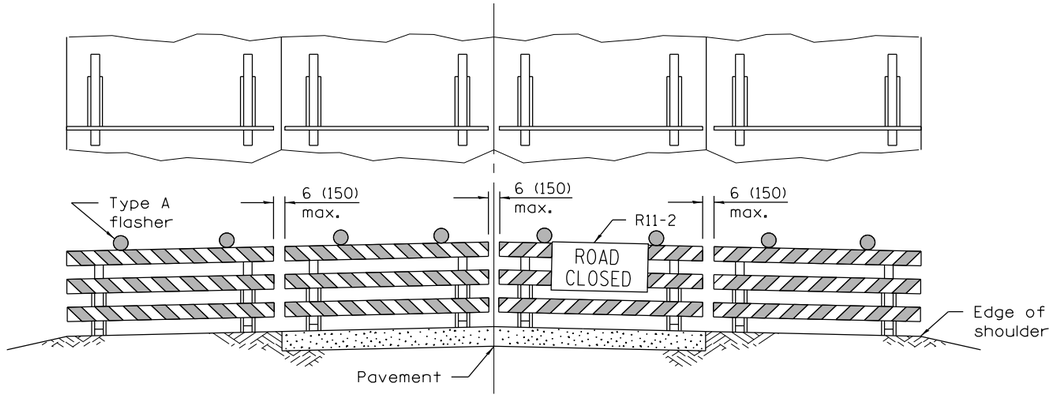

ROAD CLOSED TO ALL TRAFFIC

Reflectorized striping may be omitted on the back side of the barricades. If a Type III barricade with an attached sign panel which meets NCHRP 350 is not available, the sign may be mounted on an NCHRP 350 temporary sign support directly in front of the barricade.

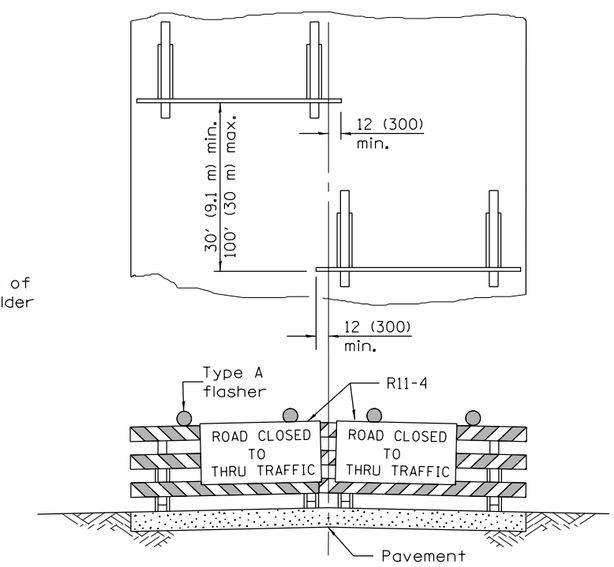

ROAD CLOSED TO THRU TRAFFIC

Reflectorized striping shall appear on both sides of the barricades. If a Type III barricade with an attached sign panel which meets NCHRP 350 is not available, the signs may be mounted on NCHRP 350 temporary sign supports directly in front of the barricade.

TYPICAL APPLICATIONS OF
TYPE III BARRICADES CLOSING A ROAD

Illinois Department of Transportation

APPROVED April 1, 2016
ENGINEER OF OPERATIONS
APPROVED April 1, 2016
ENGINEER OF DESIGN AND ENVIRONMENT

ISSUED 1-1-97

TRAFFIC CONTROL DEVICES

(Sheet 3 of 3)

STANDARD 701901–05

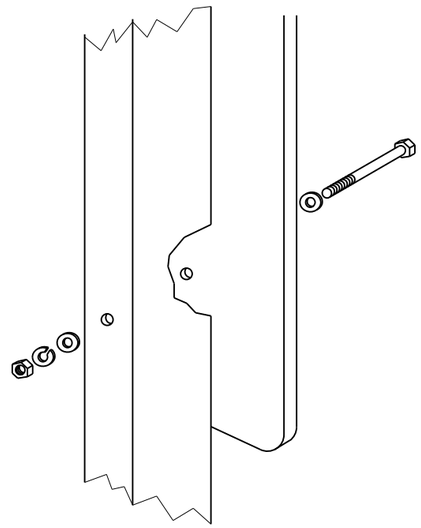

Sign panel 36 (900) wide or less

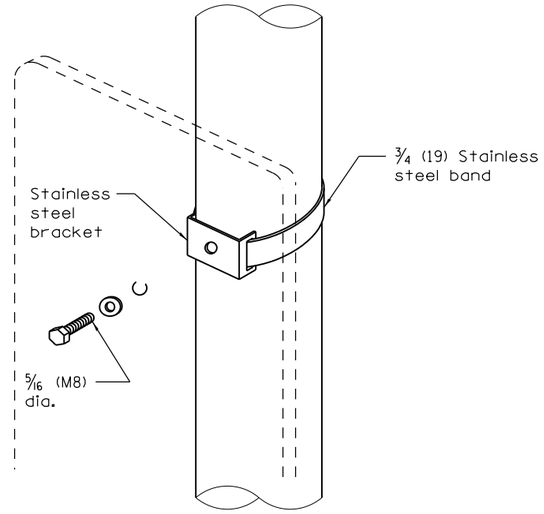

Sign panel 36 (900) wide or less

Section modulus (minimum)	Axis A	Axis B
Steel	0.050 in.^{3} (819 mm^3)	0.105 in.^{3} (1720 mm^3)
Aluminum	0.150 in.^{3} (2458 mm^3)	0.315 in.^{3} (5162 mm^3)

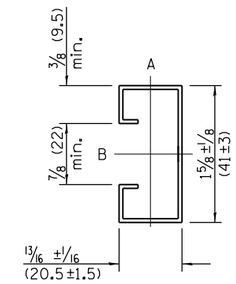

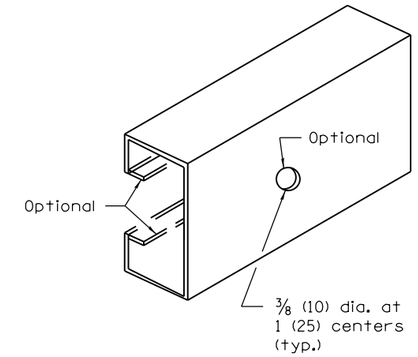

SUPPORTING CHANNEL DETAILS

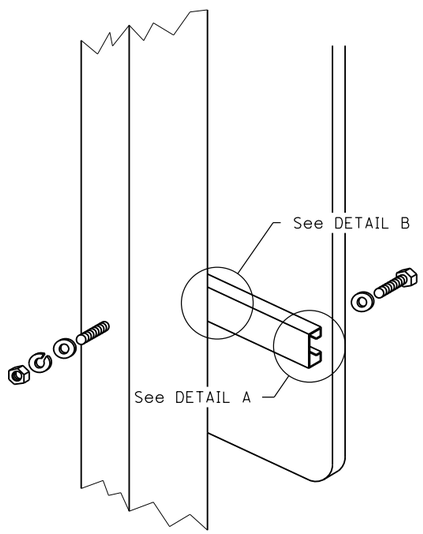

Sign panel over 36 (900) wide

WOOD OR TELESCOPING STEEL POSTS

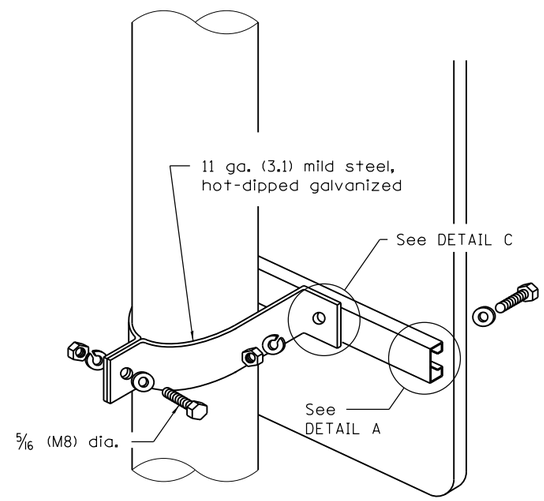

Sign panel over 36 (900) wide

LIGHT OR SIGNAL STANDARDS

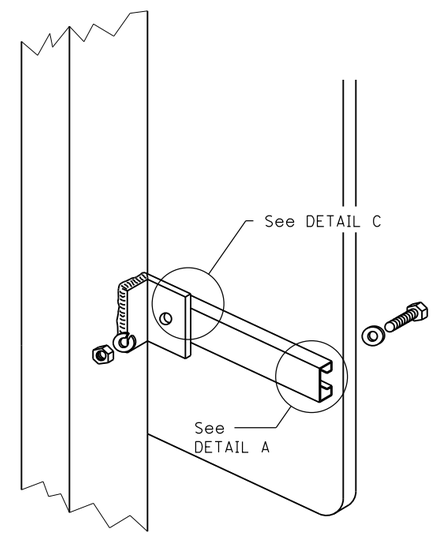

BREAKAWAY STEEL TUBING POSTS
(All sign panel sizes)

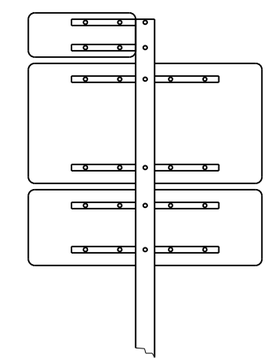

ROUTE MARKER ASSEMBLY

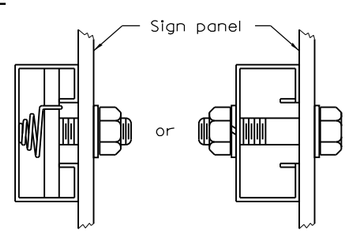

DETAIL A

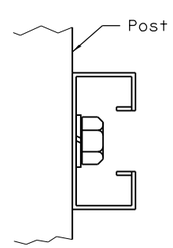

DETAIL B

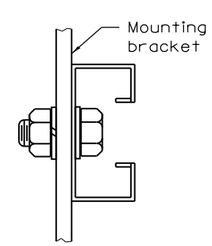

DETAIL C

All dimensions are in inches (millimeters) unless otherwise shown.

DATE	REVISIONS
1-1-09	Switched units to English (metric).
1-1-97	Renum. Standard 2319-6.

Illinois Department of Transportation

APPROVED January 1, 2009
ENGINEER OF OPERATIONS
APPROVED January 1, 2009
ENGINEER OF DESIGN AND ENVIRONMENT

ISSUED 1-1-97

SIGN PANEL MOUNTING DETAILS

STANDARD 720001–01

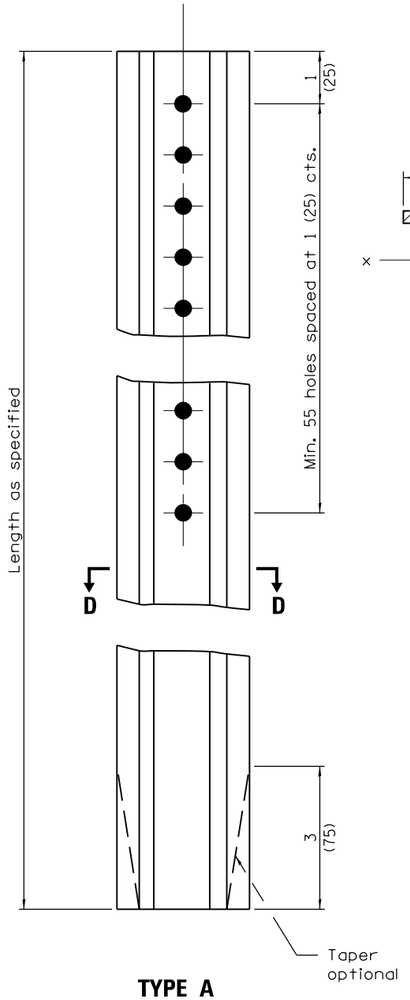

TYPE A

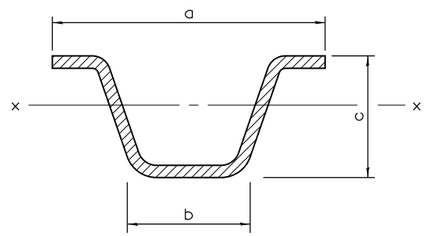

SECTION D–D

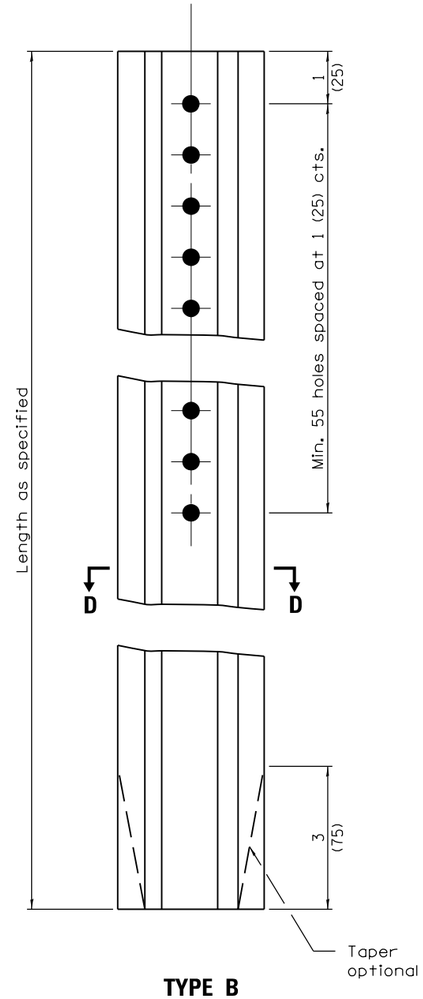

TYPE B

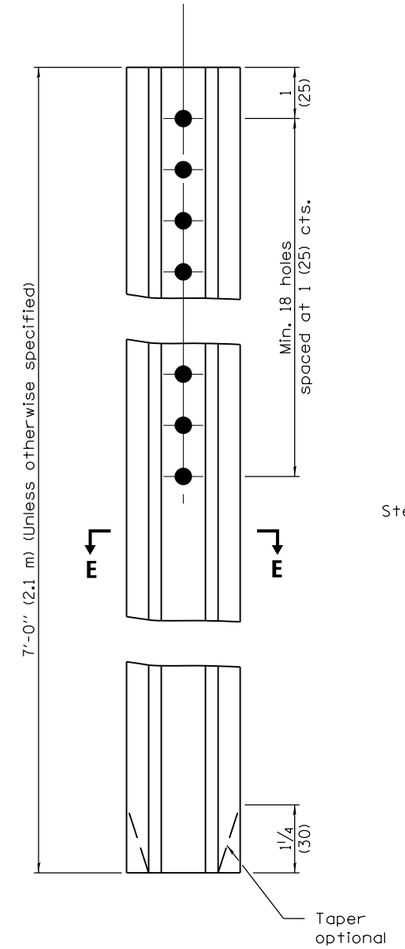

TYPE C

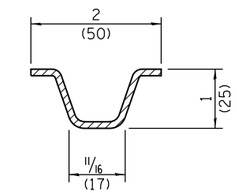

SECTION E–E

Steel - 1.12 lbs./ft. (1.67 kg/m)

		a	b	c	Sx-x in.^{3} (mm^3)	lbs./ft. (kg/m)
TYPE A	Steel	3 1/16 (78)	1 1/4 (32)	1 7/16 (37)	0.223 (3,654)	2.00 (2.98)
	Aluminum	3 1/2 (89)	1 5/8 (41)	1 7/8 (48)	0.435 (7,128)	0.90 (1.34)
TYPE B	Steel	3 3/16 (81)	1 1/4 (32)	1 1/2 (38)	0.341 (5,588)	3.00 (4.46)
	Aluminum	4 5/8 (118)	2 1/4 (57)	2 3/8 (60)	0.888 (14,552)	1.30 (1.93)

GENERAL NOTES

Dimensions shown for cross sections are minimum.

All holes are 3/8 (10).

Sx-x is the minimum section modulus about the x-x axis of the post as shown. For posts in which holes are punched or drilled for more than half their length, Sx-x shall be computed for the net section.

All dimensions are in inches (millimeters) unless otherwise shown.

Illinois Department of Transportation

PASSED January 1, 2009
ENGINEER OF POLICY AND PROCEDURES
APPROVED January 1, 2009
ENGINEER OF DESIGN AND ENVIRONMENT

ISSUED 1-1-97

DATE	REVISIONS
1-1-09	Switched units to English (metric).
1-1-97	Renum. Standard 2350-4.

METAL POSTS FOR SIGNS, MARKERS & DELINEATORS

STANDARD 720011–01